Portable process calibrator
Model CPH7000

for further approvals
see page 6 - 7

Applications

- Calibration service companies and service industry
- Measurement and control laboratories
- Quality assurance
- On-site calibration (safety also in hazardous areas)

Special features

- Manual pressure generation of -0.85 … +25 bar [12.3 ... +360 psi]
- Accuracy: 0.025 % FS (incl. calibration certificate)
- Generation/measurement of 0 ... 24 mA and voltage supply DC 24 V
- Data logger with high measuring rate and large memory
- Intrinsically safe version



Portable process calibrator model CPH7000 with optional hand pump
Fig. left: For the hazardous areas
Fig. right: Standard version

Description

General information

The model CPH7000 process calibrator is a precise, portable calibrator for the calibration and checking of analogue pressure measuring instruments, pressure transmitters and process transmitters. The CPH7000 in Ex version can also be used in hazardous areas. Furthermore, pressure switches can be checked and the switching point determined. With the CPH7000, not only can transmitters be checked, but also simulated and tested.

Design

The CPH7000 optionally features an integrated reference pressure sensor and also a manual pressure generation, with which pressures of -0.85 ... +25 bar [12.3 ... +360 psi] can be generated. It is possible to simultaneously power an external transmitter via the electrical module and to measure (or also simulate) its output signal.

Functions

The calibrator offers the possibility to set calibration routines quickly and easily, but also to run preconfigured calibration routines and automatically save the measured values. Over the WIKA-Wireless interface, the completed calibration processes can be transmitted to a PC. This data can subsequently be evaluated and archived using WIKA-Cal software. Thus a completely paperless transmitter calibration is possible with just the CPH7000.

Accuracy

The CPH7000 is temperature compensated and achieves an accuracy of 0.025 % of span. In order to avoid intricate calculations, the measured values can also be displayed directly in customer-specific units.

Data sheets showing similar products and accessories:
Test pumps, hydraulic; model CPP series; see data sheet CT 91.05
Test pump, pneumatic; model CPP30; see data sheet CT 91.06
Calibration software; WIKA-Cal; see data sheet CT 95.10

WIKA
Part of your business

Features
For pressures greater than 25 bar [362.6 psi], there are the model CPT7000 external pressure sensors.
Thus pressure measurement and calibration is possible in further pressure measuring ranges and accuracies.
An optional atmospheric module and an internal barometer record and document the environmental parameters important for a calibration, such as atmospheric pressure, air humidity and ambient temperature.

Complete service case
The process calibrator, developed specifically for maintenance and service operations, is delivered in a portable case system and, depending on requirements, can be equipped with, for example, model CPT7000 external pressure sensors, a Pt100 temperature sensor or a portable system with storage bag.

Software
The calibration software for the CPH7000 is WIKA-Cal. WIKA-Cal, alongside PC-supported calibration and the logger function, also offers the management of the calibration and instrument data in an SQL database. The data transfer is achieved completely wirelessly via WIKA-Wireless.

Certified accuracy
For the model CPH7000 process calibrator, the accuracy is certified in a factory calibration certificate accompanying the instrument. On request, we can provide a DKD/DAkkS calibration certificate.

Specifications

Digital process calibrator model CPH7000		
Indication		
Display	Touchscreen colour display	
Display resolution	up to 5 digits; selectable	
Pressure units	mbar, bar, psi, Pa, kPa, hPa, MPa, mmHg, cmHg, inHg, mmH_2O, mH_2O, inH_2O (4 °C), inH_2O (20 °C), inH_2O (60 °F), inHg (0 °C), inHg (60 °F), kg/cm^2, kp/cm^2, lbf/ft^2, kN/m^2, atm, Torr, micron, g/l (20 °C), kg/m^3 (20 °C) as well as two user-defined units	
Settings		
Applications (Apps)	Measure, calibrate, logger, switch test	
Measuring rate	Pressure Current/Voltage Application pressure switch Pt100/AMB module	50/s 60/s 60/s 1/s
Refresh rate display	4/s	
Menu languages	English, German, Spanish, French, Italian, Russian, Arabic, Chinese (settable)	
Connections		
External pressure sensor [1]	max. 2, compatible with model CPT7000 reference pressure sensors	
External ambient module [1]	max. 1 ambient module [2]	
External temperature probe [1]	max. 1 temperature probe [2]	
Manual pressure generation [1]	-0.85 … +25 bar [-12.3 ... +360 psi]	
Voltage supply		
Power supply	internal Lithium-Ion rechargeable battery (typical charging time < 7 h)	
Battery life	minimum 8 hours [3]	
Permissible ambient conditions		
Operating temperature	-10 ... +50 °C [14 ... 122 °F]	
Storage temperature	-20 ... +50 °C [-4 ... +122 °F]	
Ambient temperature when charging	0 ... 40 °C [32 ... 104 °F] (only allowed outside the hazardous areas)	

1) Optional
2) Temperature probe and ambient module use the same connection.
Cannot be used at the same time.
3) Continuous operation (without backlighting, WIKA-Wireless deactivated and the electrical module gives no voltage/current).

Digital process calibrator model CPH7000	
Air humidity	at 35 °C [95 °F]: max. 90 % r. h. (non-condensing) at 40 °C [104 °F]: max. 75 % r. h. (non-condensing) at 50 °C [122 °F]: max. 45 % r. h. (non-condensing)
Shock and vibration	15 g per EN 60068-2-6
Communication	
Interface	WIKA-Wireless 4)
Case	
Material	PC + ABS blend
Ingress protection	IP54 category 2 (tested according to ATEX and IECEx: IP20)
Dimensions	see technical drawing
Weight	approx. 1.9 kg [4.19 lbs.] without internal pump and reference sensor approx. 2.5 kg [5.51 lbs.] incl. internal pump and reference sensor

Internal sensor technology						
Pressure 5)						
Gauge pressure	bar	-1 ... +1	-1 ... 5	-1 ... 10	-1 ... 20	-1 ... 25
	psi	-14.5 ... +15	-14.5 ... +70	-14.5 ... +150	-14.5 ... +300	-14.5 ... +350
Absolute pressure	bar abs.	0 ... 1.6	0 ... 6	0 ... 10	0 ... 20	0 ... 25
	psi abs.	0 ... 15	0 ... 100	0 ... 150	0 ... 300	0 ... 350
Overpressure safety	3 times					
Accuracy of the measuring chain 6)	0.025 % of span 7)					
Resolution	5 digits					
Pressure connection	G ⅛ B female thread or ⅛ NPT female thread (only with selected pneumatic unit)					
Barometric reference 1) 8)						
Measuring range	850 ... 1,100 mbar [12.3 ... 16 psi]					
Accuracy	±1 mbar					
Electrical safety						
Resistance to overvoltage	Yes					
Short-circuit resistant	Yes					
Reverse polarity protection	Yes					
Voltage-resistant	Up to 60 V					
Input impedance						
Current measurement	20 Ω					
Voltage measurement	1 MΩ					
Current						
Measuring input	0 … 30 mA (mA socket)					
Supply	0 … 24 mA (V_{OUT} socket)					
Resolution	1 µA					
Accuracy	Measure: 0.01 % ±1 µA 9) Supply: 0.01 % ±2 µA					

1) Optional
4) Requires a PC with Bluetooth® 2.1 interface
5) The internal reference sensor is only available in combination with the pneumatic unit.
6) It is defined by the total measurement uncertainty, which is expressed with the coverage factor (k = 2) and includes the following factors: the intrinsic performance of the instrument, the measurement uncertainty of the reference instrument, long-term stability, influence of ambient conditions, drift and temperature effects over the compensated range during a periodic zero point correction.
7) Calibrated at 23 °C [74 °F] and in vertical mounting position.
8) The barometric reference can be used to switch pressure types, absolute <=> gauge. With gauge pressure sensors, the measuring range of the sensor must begin with -1 bar [-15 psi] in order to carry out a complete absolute pressure emulation.
9) In the event of interference caused by high-frequency electromagnetic fields in a frequency range of 100 … 300 MHz, an increased deviation of up to 0.1 % is expected for the current measurement function.

Internal sensor technology	
Voltage	
Measuring input	DC 0 … 30 V (V_{IN} socket)
Supply	DC 24 V (V_{OUT} socket)
Resolution	1 mV
Accuracy	0.01 % or reading ±1 mV

Power supply unit model FW7530	
Input voltage	AC 100 ... 240 V, 50 ... 60 Hz
Output voltage	DC 12 V
Nominal output current	2,500 mA
Permissible ambient conditions	
Operating temperature	0 ... 40 °C [32 ... +104 °F]; up to 90 % r. h. (non-condensing)
Storage temperature	-40 ... +70 °C [-40 ... +158 °F]
Air humidity	20 ... 80 % r. h. (non-condensing)

Temperature probe Pt100 [1]	
Measuring range	-50 ... +250 °C [-58 ... +482 °F]
Accuracy	1/10 DIN, class B ±0.1 °C [10]
Probe length	200 mm [7.87 in]
Probe diameter	3 mm [0.12 in]
Cable length	1 m [3.28 ft]
Connection to CPH7000	max. 1 temperature probe [2]
User-defined RTD probe	Input of the coefficients of R0, A, B and C

Ambient module [1]	
Measuring range	
Air humidity	0 ... 100 % r. h.
Temperature	-30 ... +125 °C [-22 ... +257 °F]
Accuracy	
Air humidity	±5 % r. h.
Temperature	±0.2 K [0.36 °F]
Connection to CPH7000	max. 1 ambient module [2]

WIKA-Wireless [4]	
Frequency range	2,400 ... 2,500 MHz
HF output power	max. 2 dBm (+ 2 dBi)
Number of channels	79
Channel spacing	1 MHz
Bandwidth	80 MHz
Output power	4 dBm / 10 mW

1) Optional
2) Temperature probe and ambient module use the same connection.
   Cannot be used at the same time.
4) Requires a PC with Bluetooth® 2.1 interface
10) In the event of interference caused by high-frequency electromagnetic fields in a frequency range of 100 … 200 MHz, an increased deviation of up to ±0.2 K is expected for the temperature measurement function.

Reference pressure sensor model CPT7000

Pressure range						
Gauge pressure	bar	-0.25 ... +0.25	-0.4 ... +0.4	-0.6 ... +0.6	-1 ... 0	-1 ... +0.6
		-1 ... +1	-1 ... +1.5	-1 ... +2.5	-1 ... +3	-1 ... +5
		-1 ... +9	-1 ... +10	-1 ... +15	-1 ... +24	-1 ... +25
		-1 ... +39	-1 ... +40			
		0 ... 0.4	0 ... 0.6	0 ... 1	0 ... 1.6	0 ... 2.5
		0 ... 4	0 ... 6	0 ... 10	0 ... 16	0 ... 25
		0 ... 40	0 ... 60	0 ... 100	0 ... 160	0 ... 250
		0 ... 400	0 ... 600	0 ... 700	0 ... 1,000	0 ... 1,600 [11]
		0 ... 2,500 [11]	0 ... 4,000 [11]	0 ... 5,000 [11]	0 ... 6,000 [11]	0 ... 7,000 [11]
		0 ... 8,000 [11]	0 ... 9,000 [11]	0 ... 10,000 [11]		
	psi	-14.5 ... 0	-8 ... +8	-14.5 ... +15	-14.5 ... +40	-14.5 ... 70
		-14.5 ... +100	-14.5 ... +130	-14.5 ... +300		
		0 ... 5	0 ... 10	0 ... 20	0 ... 30	0 ... 50
		0 ... 60	0 ... 100	0 ... 150	0 ... 160	0 ... 200
		0 ... 300	0 ... 500	0 ... 700	0 ... 1,000	0 ... 1,500
		0 ... 2,000	0 ... 3,000	0 ... 5,000	0 ... 6,000	0 ... 8,000
		0 ... 10,000	0 ... 15,000	0 ... 20,000	0 ... 30,000	0 ... 50,000
		0 ... 100,000	0 ... 150,000			
Absolute pressure	bar abs.	0 ... 1	0 ... 1.6	0 ... 2.5	0 ... 4	0 ... 6
		0 ... 10	0 ... 16	0 ... 25	0 ... 40	
	psi abs.	0 ... 15	0 ... 20	0 ... 30	0 ... 50	0 ... 60
		0 ... 100	0 ... 150	0 ... 200	0 ... 300	0 ... 500
Overpressure safety	3 times; < 25 bar 2 times; > 25 bar ... ≤ 600 bar 1.5 times; > 600 bar ... ≤ 1,600 bar 1.3 times; > 1,600 bar ... ≤ 6,000 bar 1.1 times; > 6,000 bar			3 times; < 360 psi 2 times; > 360 psi ... ≤ 8,700 psi 1.5 times; > 8,700 psi ... ≤ 25,000 psi 1.3 times; > 25,000 psi ... ≤ 85,000 psi 1.1 times; > 85,000 bar		
Process connection						
Selectable versions	■ G ⅜ B ■ G ¼ B ■ G ¼ female ■ G ½ B ■ G ½ male on G ¼ female			■ G ½ B flush with O-ring of NBR ■ G ½ B flush with O-ring of EPDM ■ G 1 B flush with O-ring of NBR ■ G 1 B flush with O-ring of EPDM		
	■ ¼ NPT ■ ½ NPT			■ ½ NPT male on ¼ NPT female ■ ½ NPT female		
	■ M16 x 1.5 female with sealing cone ■ M18 x 1.5 male on G ¼ female			■ M20 x 1.5 ■ M20 x 1.5 female with sealing cone		
	■ 9/16-18 UNF female F250-C					
	■ R ½ per ISO7 (DIN 2999)					
Sensor data						
Accuracy [6]	0.025 % of span [7]					
Resolution	5 digits					
Compensated range	10 ... 60 °C [50 ... 140 °F]					
Material						
Wetted parts	Stainless steel (with measuring ranges ≤ 25 bar [≤ 360 psi] Elgiloy® in addition)					
Internal transmission fluid	Synthetic oil (only for measuring ranges up to 25 bar [360 psi])					

6) It is defined by the total measurement uncertainty, which is expressed with the coverage factor (k = 2) and includes the following factors: the intrinsic performance of the instrument, the measurement uncertainty of the reference instrument, long-term stability, influence of ambient conditions, drift and temperature effects over the compensated range during a periodic zero point correction.
7) Calibrated at 23 °C [74 °F] and in vertical mounting position
11) > 1,000 ... < 4,000 bar [> 14,500 ... < 60,000 psi]: expanded accuracy of 0.15 % FS
≥ 4,000 bar [≥ 60,000 psi]: expanded accuracy of 0.25 % FS

Reference pressure sensor model CPT7000	
Reference conditions per IEC 61298-1	
Atmospheric pressure	860 hPa < P < 1,060 hPa [12.5 psi < P < 15.4 psi]
Ambient temperature	18 °C < T < 28 °C, typ. 23 °C
Air humidity	35 % r. h. < T < 95 % r. h. , typ. 55 % r. h.
Position	Hand-held lying face-up
Permissible ambient conditions	
Medium temperature	-20 ... +60 °C [-4 ... +140 °F] [12)] -20 ... +80 °C [-4 ... +176 °F]
Operating temperature	-20 ... +80 °C [-4 ... +176 °F]
Storage temperature	-20 ... +80 °C [-4 ... +176 °F]
Relative humidity	0 ... 95 % r. h. (non-condensing)
Temperature compensation	10 ... 60 °C [50 ... 140 °F]
Temperature coefficient	Zero point = 0.1 % / 10 K Span = 0.1 % / 10 K
Case	
Material	Stainless steel
Connection to the CPH7000	Option: external operation via 1 m or 3 m [3.28 ft or 9.84 ft] connection cable (plug-and-play)
Ingress protection	IP65 / IP67 when connected
Dimensions	see technical drawing
Weight	approx. 230 g [0.5 lbs.]

12) For oxygen versions, the medium temperature must not exceed 60 °C [140 °F].

Safety-related characteristic values

Digital process calibrator model CPH7000

Connections EXT1 and EXT2: Only for connecting with certified sensor type CPT7000
Connector AMB or RTD: Ambient module for temperature and moisture; article number: 14121907
Pt100 resistance thermometer for CPH7000; article number: 14113648

Parameters	Connections EXT1 and EXT2	Connector AMB or RTD
Max. output voltage	U_o = DC 5.4 V	U_o = DC 14 V
Max. output current	I_o = 36 mA	I_o = 39 mA
Max. output power	P_o = 242 mW	P_o = 92 mW
Max. external capacitance	C_o = 65 nF	C_o = 630 nF
Max. external inductance	L_o = 406 µH	L_o = 28 mH

Connector V_{OUT}: Only for power supply of an external passive instrument (e.g. transmitter)
Connector V_{IN} and mA: Input circuit V_{IN} and mA to GND

Parameters	Connector V_{OUT}	Connector V_{IN}	Connector mA
Max. output voltage	U_o = DC 28.9 V	U_o = DC 9.6 V	U_o = DC 9.6 V
Max. output current	I_o = 97 mA	I_o = 0.02 mA	I_o = 3 mA
Max. output power	P_o = 705 mW	P_o = 1 mW	P_o = 10 mW
Max. external capacitance	C_o = 63 nF	C_o = 3.6 µF	C_o = 3.6 µF
Max. external inductance	L_o = 340 µH	L_o = 100 mH	L_o = 100 mH
Max. input voltage	-	U_i = DC 30 V	U_i = DC 30 V
Max. input current	-	-	I_i = 100 mA
Max. input power	-	-	P_i = 800 mW

Parameters	Connector V_{OUT}	Connector V_{IN}	Connector mA
Effective internal capacitance	-	C_i = 12 nF	C_i = 12 nF
Effective internal inductance	-	L_i negligible	L_i negligible

Battery power supply	
Nominal capacity	4,000 mAh
Nominal voltage	7.2 V
Max. charging voltage	U_m = DC 60 V

Ambient temperature	
Ambient temperature range	-20 °C ≤ Ta ≤ +50 °C
Charging ambient temperature range outside hazardous area	0 °C ≤ Ta ≤ +40 °C

Reference pressure sensor model CPT7000

Electrical parameters (4-wire circuit: power supply wires: „+“, „-“ = GND; data-wires: RXD, TXD)

Parameters	Gas applications	Dust application
Max. input voltage	U_i = DC 6,7 V	U_i = DC 6,7 V
Max. input current	I_i = 400 mA	I_i = 250 mA
Max. input power	P_i = 250 mW	P_i = 250 mW
Effective internal capacitance	C_i = 4,4 nF	C_i = 4,4 nF
Effective internal inductance	L_i negligible	L_i negligible
Max. cable capacitance	C_c = 30 nF	C_c = 30 nF
Max. cable inductance	L_c = 35 µH/m	L_c = 35 µH/m
Max. short circuit current in case of dust application	-	I_{max} = 250 mA

Ambient temperature range = medium temperature

Parameters	
Temperature class T1 to T4	-20 °C ≤ T_a ≤ +80 °C
Max. surface temperature T135 °C for dust	-20 °C ≤ T_a ≤ +80 °C

Ambient temperature range for high media temperature

Parameters			
Temperature class	**Max. medium temperature (°C)**	**Maximum ambient temperature (°C)**	
		All models except CPT7000--*****-**4 (Models without cooling element)**	**Models CPT7000-**-*****-**4 (Models with cooling element)**
T3	150	N / A	40
T4	120	30	50
T4	105	40	50

Approvals

Logo	Description	Country
CE EAC Ex	**EU declaration of conformity for CPH7000** ■ EMC directive EN 61326 emission (group 1, class B) and immunity (basic electromagnetic environment) ■ RED directive EN 300 328 harmonised frequency range 2,400 … 2,500 MHz is used; Bluetooth® Classic, max. transmission power 10 mW. The instrument may be used without limitations in the EU and also CH, NO and LI. Protection of health and safety ■ RoHS directive ■ ATEX directive (option) Hazardous areas - Ex i Zone 1 gas — II 2G Ex ib IIC T4 Gb	European Union
CE Ex	**EU declaration of conformity for CPT7000** ■ EMC directive EN 61326 emission (group 1, class B) and immunity (industrial application) ■ Pressure equipment directive PS > 200 bar, module A, pressure accessory ■ RoHS directive ■ ATEX directive (option) Hazardous areas - Ex i Zone 0 gas — II 1G Ex ia IIC T4 Ga Zone 1 mounting to zone 0 gas — II 1/2G Ex ia IIC T4 Ga/Gb Zone 20 dust — II 1D Ex ia IIIC T135°C Da Zone 21 mounting to Zone 20 dust — II 1/2D Ex ia IIIC T135°C Da/Db	European Union
IECEx	**IECEx for CPH7000 (option)** Hazardous areas - Ex i Zone 1 gas — Ex ib IIC T4 Gb	International
IECEx	**IECEx for CPT7000 (option)** Hazardous areas - Ex i Zone 0 gas — Ex ia IIC T4 Ga Zone 1 mounting to zone 0 gas — Ex ia IIC T4 Ga/Gb Zone 20 dust — Ex ia IIIC T135°C Da Zone 21 mounting to zone 20 dust — Ex ia IIIC T135°C Da/Db	International
EAC	**EAC (option)** ■ EMC directive ■ Low voltage directive	Eurasian Economic Community
	GOST (option) Metrology, measurement technology	Russia
	KazInMetr (option) Metrology, measurement technology	Kazakhstan
-	**MTSCHS (option)** Permission for commissioning	Kazakhstan
	Uzstandard (option) Metrology, measurement technology	Uzbekistan

Certificates

Certificate	
Calibration	Standard: 3.1 calibration certificate per EN 10204 Option: DKD/DAkkS calibration certificate
Recommended recalibration interval	1 year (dependent on conditions of use)

Approvals and certificates, see website

Patents, property rights

Patents	
Design	Registered under USD 786.719S

Dimensions in mm [in]

Digital process calibrator model CPH7000

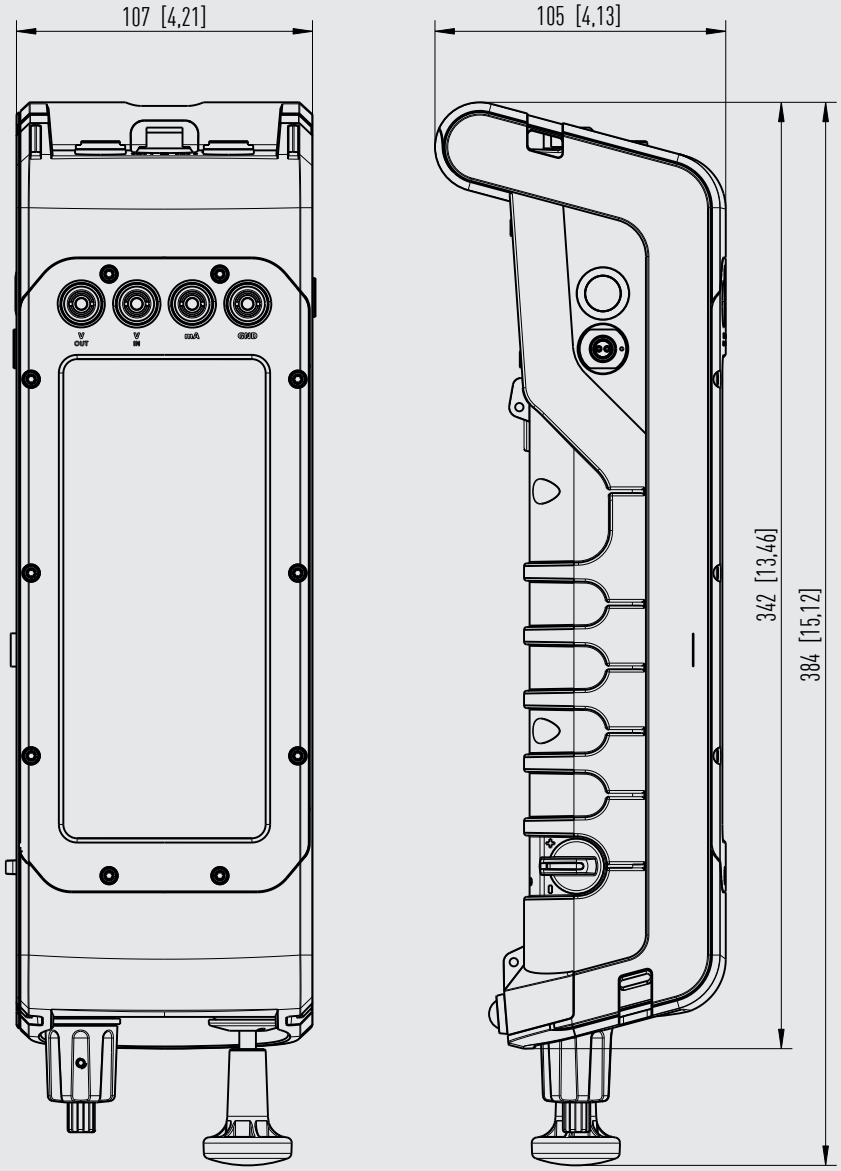

Reference pressure sensor model CPT7000

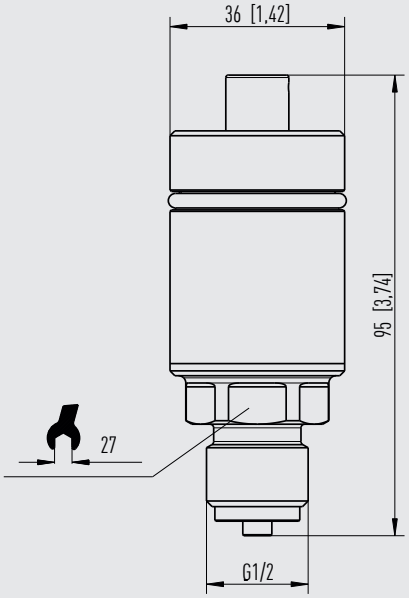

Application icons (app)

The home screen is very clearly subdivided into application-oriented apps:

Measure:
Display of 3 different measurements

Logger:
Simultaneous recording of up to 3 signals

Info:
All instrument information available at a glance

Remote:
WIKA-Wireless radio transmission settings

Calibrate:
Setting of calibrations using calibration assistant

Switch test:
Testing of pressure switches (NC or NO)

Settings:
General instrument settings

Service:
All service data at a glance

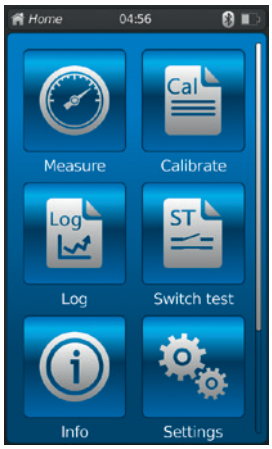

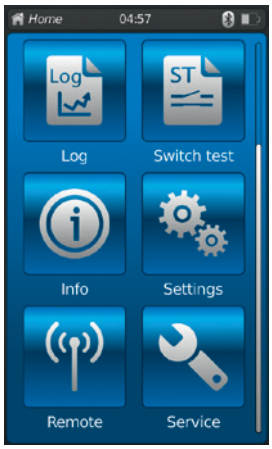

Special operating modes

Operating mode: Measure

Features

- 3 different measurements in one view
- 30 pressure units + 2 programmable units
- Resolution: Up to 4 decimal places
- Graphical display via bargraph
- Optionally settable functions: Min/Max/Tare/Filter/Alarm min/Alarm max/Mean value/Rate/Sensor temperature

Applications

- Measurement of operating/process pressures
- Comparative measurements with test items (power supply and display for the test item through the CPH7000)
- Maximum and Minimum memory (e.g. for leak testing)
- Alarm function for safety testing

For further information see the operating instruction.



Representation of possible measuring channels



Selection of the type of measurement or calibration

Operating mode: Calibrate



Menu screen of the operating mode “Calibration”



Representation of calibration results as table



Representation of calibration results as graph

Features

- Calibration assistant
- Supply with pressure, current and voltage
- Calibration protocol is automatically saved

Applications

- On-site calibration of pressure sensor and pressure measuring instruments (without PC)
- A calibration assistant guides you easily through the calibration (following DKD/DAkkS). With this, the data sets, including date and time, are recorded within the CPH7000.
- Prior to calibration, the calibration routines can be set directly on the instrument or uploaded via WIKA-Cal software.
- Up to 100 calibrations can be stored
- Re-calibrations possible

PC software available

Communication with WIKA-Cal calibration software via WIKA-Wireless

Operating mode: Switch test



Menu screen of the operating mode “Switch test”

Switch test with external voltage supply



Switch test with voltage supply DC 24 V of the CPH7000



Features

- Pressure display on the closing and opening of the switch
- Automatic calculation of the hysteresis

Applications

- On-site functional check of pressure switches (without PC)
- Determination of the switch point accuracy and repeatability
- Determination of the switch point hysteresis

Operating mode: Logger

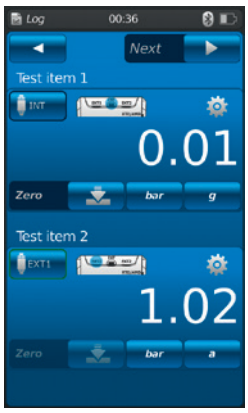

Menu screen of the operating mode „Logger“

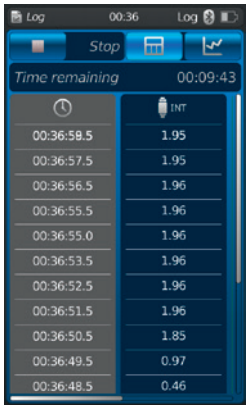

Representation of logger results as table

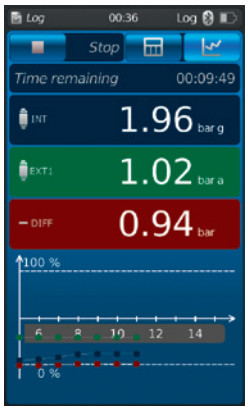

Representation of logger results as graph

Features

- Logging of max. 3 signals/measured value at the same time
- Automatic or manual data acquisition
- Direct display as graph or table
- Logger protocols are automatically saved

Applications

- Logging of current, voltage, pressure and temperature
- The logger menu guides one, step by step, through the logger process. The data sets, incl. date and time, are automatically saved in the CPH7000.
- Before logging the data, routines can be set directly on the instrument or uploaded via WIKA-Cal software.
- Re-logging possible

PC software available

Communication with WIKA-Cal calibration software via WIKA-Wireless

Operating mode: Simulation of transmitter signals

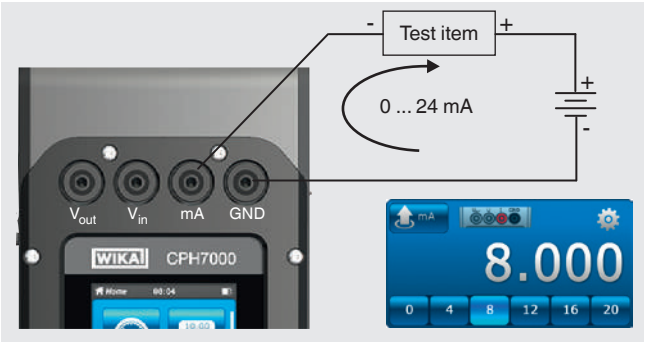



Features

Manual or automatic current source function

Applications

The CPH7000 can be connected in place of a transmitter within a current loop and used as a current source.

The transmitter output signals from 0 ... 24 mA can be simulated through manual input or automatically using the ramp and step functions.

WIKA-Cal calibration software

Easy and fast creation of a high-quality calibration certificate

WIKA-Cal calibration software serves for the creation of calibration certificates or logger protocols for pressure measuring instruments. A demo version is available for free download.
To switch from the demo version to a licenced version, a USB dongle with a valid licence must be purchased.
The pre-installed demo version changes automatically to the selected version when plugging in the USB dongle and remains available as long as the USB dongle is connected to the PC.



- The user is guided through the calibration or logger process
- Management of calibration data and instrument data
- Intelligent preselection via SQL database
- Menu languages: German, English, Italian, French, Dutch, Polish, Portuguese, Romanian, Spanish Swedish, Russian, Greek, Japanese, Chinese
  More languages will be due with software updates
- Customer-specific complete solutions possible
- Maximum degree of automation in connection with our CPC series

The supported instruments are continuously expanded and even customer-specific adaptations are possible.

For further information see data sheet CT 95.10

Two WIKA-Cal licences are available together with process calibrator

The WIKA-Cal calibration software is available both for reading the logger data stored in the process calibrator as well as for online calibrations together with a PC. The scope of software functions depends on the selected licence. Several licences can be combined on one USB dongle.

Cal-Template (light version)	Log-Template (full version)
■ Semi-automated creation of calibration certificates for mechanical and electronic pressure measuring instruments ■ Calibration certificate creation 3.1 in accordance with DIN EN 10204 ■ Calibration reports can be exported to Excel® template or XML file	■ Live measurement recording for a certain period of time with selectable interval, duration and start time ■ Readout of the integrated data logger ■ Creation of logger reports with graphic and/or tabular representation of the measurement results in PDF format ■ Export of measurement results as CSV file possible
Ordering information for your enquiry:	
WIKA-CAL-LZ-Z-Z	WIKA-CAL-ZZ-L-Z
WIKA-CAL-LZ-L-Z	

Accessories

		Order code
Special features		**CPH-A-70-**
	**Adapter set “Standard”** Consisting of: ■ G ½ male to G ½, G ¼, ½ NPT or ¼ NPT female ■ Sealing set	-G-
	**Adapter set for 4 mm hose connection** Consisting of: ■ G ⅛ female to G ½, G ¼, ½ NPT or ¼ NPT female ■ 1 m hose ■ 5 hose coupling ■ Sealing set	-F-
	**Adapter set with hose connection** Consisting of: G ⅛ via hose to G ¼, G ½, ¼ NPT or ½ NPT female	-7-
	Pressure connection set model Minimess 1620 incl. test item hose, length 1 m [3.28 ft] ⚠ **May not be used in hazardous area!**	-8-
	**Dirt trap set “Standard”** Consisting of: ■ Dirt trap ■ Sealing set ■ Hose ■ Hose connection G ⅛ via hose to G ¼, G ½, ¼ NPT or ½ NPT female ⚠ **May not be used in hazardous area!**	-L-
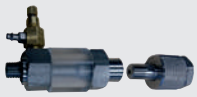	**Dirt trap set with knurled nut** Consisting of: ■ Dirt trap ■ Knurled nut ■ Sealing set ■ Hose ■ Hose connection G ⅛ via hose to G ¼, G ½, ¼ NPT or ½ NPT female ⚠ **May not be used in hazardous area!**	-M-
	**Sealing set** Consisting of: ■ 4 x G ½ USIT seals ■ 2 x G ¼ USIT seals ■ Plastic box	-D-
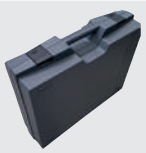	**Plastic case** For 1 x process calibrator model CPH7000 for storage and transport ⚠ **May not be used in hazardous area!**	-K-
	**Carrying system**	-U-

		Order code
Special features		**CPH-A-70-**
	**Belt and accessory bag** ⚠ **May not be used in hazardous area!**	-A-
	**Carrying system and accessory belt bag** ⚠ **May not be used in hazardous area!**	-W-
	**Test cable set** ■ 3 x black ■ 3 x red ■ Various adapters	-T-
	**Sensor connection cable** for reference pressure sensor model CPT7000; length 1 m [3.28 ft]	-S-
	for reference pressure sensor model CPT7000; length 3 m [9.84]	-V-
	**Temperature probe Pt100** (uncalibrated) For hazardous areas only standard probes with the article number 14113648 may be used!	-P-
	**Atmospheric module**	-E-
	**Power supply unit** ⚠ **May not be used in hazardous area!**	-N-
	**WIKA-Wireless USB Stick** ⚠ **May not be used in hazardous area!**	-B-
Ordering information for your request		
	1. Order code: CPH-A-70 **2. Option:**	⇓ **[ ]**

Scope of delivery

- Process calibrator model CPH7000
- Power supply unit
- Operating instructions
- Service case with 2 connection cables (4 mm plugs)
- 3.1 calibration certificate per DIN EN 10204

Options

- DKD/DAkkS calibration certificate



Process calibrator model CPH7000



Service case with process calibrator and accessories (completely equipped)

Ordering information

CPH7000 / Version / Pressure generation / Unit / Pressure type / Measuring range / Accuracy / Type of certificate / Barometer / Barometer calibration / Atmospheric module / Atmospheric module calibration / Temperature probe / Temperature probe calibration / Electrical module calibration / Communication / Software / Pressure connection set / Carrying system / Transport case / Further approvals / Additional ordering information

CPT7000 / Version / Unit / Pressure type / Measuring range / Process connection / Medium temperature / Wetted parts / Special design for media / Accuracy / Type of certificate / Sensor cable / Further approvals / Additional ordering information

© 12/2016 WIKA Alexander Wiegand SE & Co. KG, all rights reserved.
The specifications given in this document represent the state of engineering at the time of publishing.
We reserve the right to make modifications to the specifications and materials.

WIKA Alexander Wiegand SE & Co. KG
Alexander-Wiegand-Straße 30
63911 Klingenberg/Germany
Tel. +49 9372 132-0
Fax +49 9372 132-406
info@wika.de
www.wika.de