Technical Library

Test Probe Details

RS Stock No	Colour
424-311	Black
424-327	Red

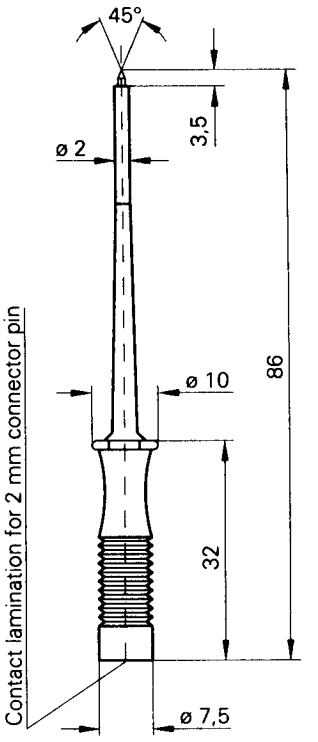

Description

Miniature test probe for **sampling miniature measuring points.** The stainless steel tip easily penetrates insulating layers and oxide layers. Gold-plated **2 mm dia. socket** ensures **socket connection.**

Technical data		
Type of connection/ Connector		ø 2 mm
Test probe		rigid
Clamping area up to		
Clamping force at the tip (min.)		
Compressive actuating force (max.)		
Volume resistance (max.)		100 mΩ
Permissible temperature range		–25 °C . . . + 60 °C
Colour index*	**black**	**-100**
	red	**-101**
	silver-plated	

RS Components shall not be liable for any liability or loss of any nature (howsoever caused and whether or not due to RS components' negligence) which may result from the use of any information provided in RS literature.

RS Components Ltd. PO Box 99, Corby, Northants, NN17 9RS
An Electrocomponents Company
Telephone: 01536 201234
© RS Components Ltd. 1999