Roof Filter Fan RFP 018 Series 300m³/h, 500m³/h



Photo: Art. No. 01860.0-00



Photo: Art. No. 01861.0-00

- **Very low noise**
- **Minimal depth in enclosure**
- **High through-flow air volume**
- **High reliability**
- **Time-saving installation and mat exchange**

Roof filter fans find use in enclosures and housings, from which warm air has to be diverted to lower the internal temperature. These low-noise roof filter fans are used to expel warm air from within the enclosure which has been generated by the stray power of the components and so protects the internal devices from overheating. To exchange the filter mat the hood can be easily opened without tools. The roof exit filter provides passive ventilation.

CE RoHS 2002/95/EC compliant

UV

Technical Data

Axial fans, ball bearing	service life 50,000h at 25°C/77°F (65% RH)
	fan body aluminium, rotor plastic
Connection	3-pole clamp for 2.5mm², clamping torque 0.8Nm max.
Case	plastic according to UL94 V-0, light grey;
	weather proof and UV light resistant according UL746C (f1)
Filter mat	G3 acc. to DIN EN 779, filtering degree 85%
Filter material	synthetic fibre with progressive construction, temperature
	resistant to 100°C, self-extinguishing class F1;
	moisture resistant to 100% RH, reusable - cleaning by
	washing or vacuuming
Operating / Storage humidity	max. 90 % RH (non-condensing)
Prot. type / Protection class	IP32 / I (earthed)
Approvals	UL intended; (230V only: VDE)

Important note: For reasons of pressure compensation the roof filter fan must always be operated in combination with a passive intake filter (e.g. Art. No. 11803.0-00) or another filter fan (e.g. Art. No. 01803.0-00).

Roof Filter Fan (01860.0-xx)

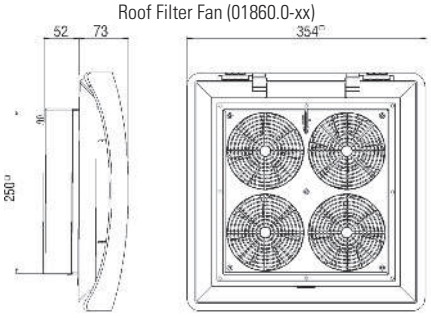

Roof Filter Fan (01861.0-xx)

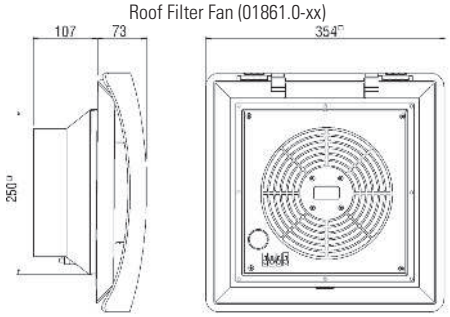

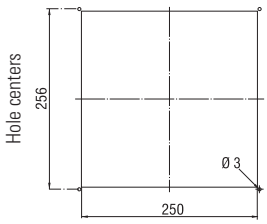

Enclosure cut-out

Roof Filter Fan RFP 018 Series

Art. No.	Operating voltage	Air volume, free flow	Current consumption	Average noise level (DIN EN ISO 4871)	Depth in enclosure	Enclosure cut-out	Weight (approx.)	Operating / Storage temperature
01860.0-00	230VAC, 50Hz	300m³/h	68W	55dB (A)	52mm	250 x 250mm + 0.4	3.3kg	-10 to +70°C (+14 to +158°F) / -40 to +70°C (-40 to +158°F)
01861.0-00	230VAC, 50Hz	500m³/h	64W	67dB (A)	107mm	250 x 250mm + 0.4	2.6kg	-25 to +70°C (-13 to +158°F)
01860.0-02	120VAC, 60Hz	345m³/h	60W	55dB (A)	52mm	250 x 250mm + 0.4	3.3kg	-10 to +70°C (+14 to +158°F) / -40 to +70°C (-40 to +158°F)
01861.0-02	120VAC, 60Hz	575m³/h	85W	67dB (A)	107mm	250 x 250mm + 0.4	2.6kg	-25 to +70°C (-13 to +158°F)

Roof Exit Filter REP 118 Series

Art. No.	Depth in enclosure	Enclosure cut-out	Weight (approx.)	Filter mat	Protection type
11860.0-00	11mm	250 x 250mm + 0.4	1.0kg	G3 acc. to DIN EN 779, filtering degree 85%	IP32

Filter Mat FM 086

Filter mat	282 x 282mm
G3 (1 packing unit = 3 pcs.)	Art. No. 08613.0-01

Specifications are subject to change without notice. Errors and omissions excepted. Suitability of this product for its intended use and any associated risks must be determined by the end customer/ buyer in its final application. 04.08.2010

++ STEGO UK Ltd. + Unit 12, First Quarter Business Park + Blenheim Road + Epson, Surrey KT19 9QN + England + info@stego.co.uk + www.stego.co.uk ++