OGH700

Laser diffuse reflection sensor

OGHLFPKG/US100

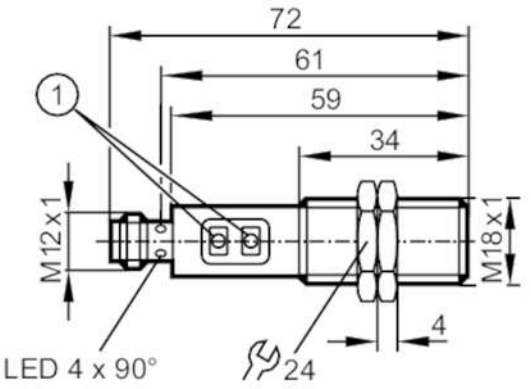

1 programming buttons

Product characteristics		
Type of light		red light
Laser protection class		1
Housing		threaded type
Application		
Special feature		Background suppression
Function principle		Diffuse reflection sensor
Electrical data		
Operating voltage	[V]	10...36 DC
Current consumption	[mA]	15
Protection class		II
Reverse polarity protection		yes
Type of light		red light
Wave length	[nm]	655
Typ. lifetime	[h]	50000
Outputs		
Electrical design		PNP
Output function		light-on/dark-on mode; (programmable)
Max. voltage drop switching output DC	[V]	2.5
Permanent current rating of switching output DC	[mA]	200
Switching frequency DC	[Hz]	1000
Short-circuit protection		yes
Type of short-circuit protection		pulsed
Overload protection		yes
Detection zone		
Range	[mm]	20...200; (white paper 200 x 200 mm 90% remission)

OGH700

Laser diffuse reflection sensor

OGHLFPKG/US100

Range on white object (90 % remission)	[mm]	20...200	
Range on grey object (18 % remission)	[mm]	20...100	
Range on black object (6 % remission)	[mm]	20...70	
Range adjustable		yes	
Diameter of the smallest detectable object	[mm]	1.5	
Max. light spot diameter	[mm]	1.2	
Background suppression available		yes	
Operating conditions			
Ambient temperature	[°C]	-10...60	
Protection		IP 65; IP 67	
Tests / approvals			
EMC		EN 60947-5-2	
Laser protection class		1	
Notes on laser protection		Caution:	laser light
		laser class:	1
			EN / IEC60825-1:2007
			EN / IEC60825-1:2014
			Complies with 21 CFR 1040 except for deviations pursuant to Laser Notice No. 50, dated June 2007.
MTTF	[years]	485	
Mechanical data			
Weight	[g]	62.3	
Housing		threaded type	
Dimensions	[mm]	M18 x 1 / L = 72	
Thread designation		M18 x 1	
Materials		stainless steel (1.4404 / 316L); PA; LCP; EPDM; TPU	
Lens material		PMMA	
Displays / operating elements			
Display		switching status	1 x LED, yellow
Accessories			
Items supplied		lock nuts: 2	
Remarks			
Remarks		operating voltage "supply class 2" according to cULus	
Pack quantity		1 pcs.	

OGH700

Laser diffuse reflection sensor

OGHLFPKG/US100

Electrical connection

Connector: 1 x M12; coding: A

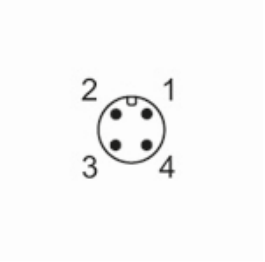

Connection

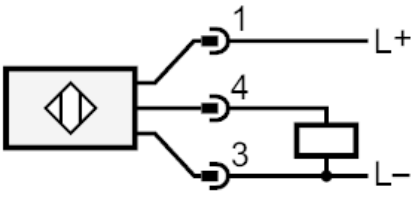

Diagrams and graphs

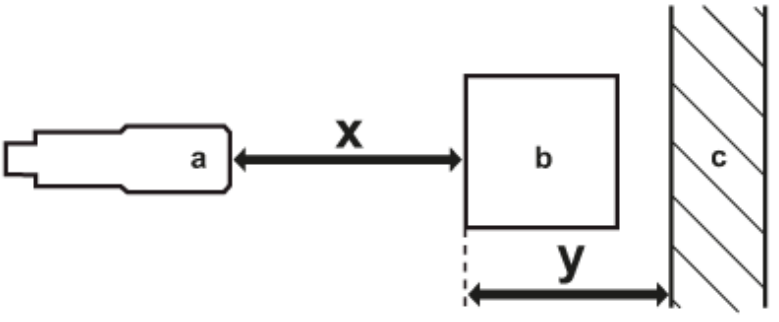

a: sensor

b: object

c: background

x: distance sensor/object [mm]

y: min. distance object/background [mm]

OGH700

Laser diffuse reflection sensor

OGHLFPKG/US100

accuracy graph

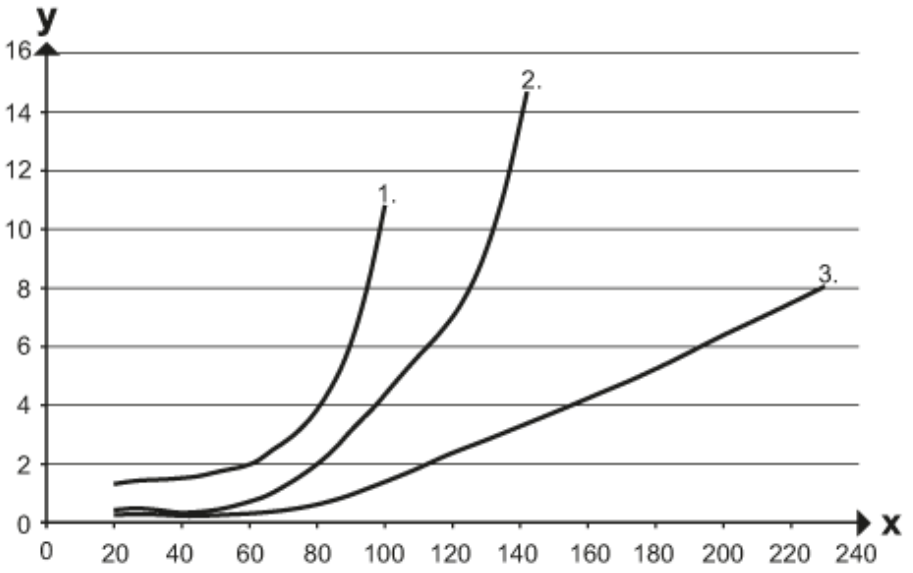

x: distance sensor/object [mm]

y: min. distance object/background [mm]

1 = object black (6 % remission) , background white (90 % remission)

2 = object grey (18 % remission) , background white (90 % remission)

3 = object white (90 % remission) , background white (90 % remission)