87045 LIMOGES Cedex
Telephone: 33 0 5 55 06 87 87 - Fax: 33 0 5 55 06 88 88

# Batik™
# Flush-mounting boxes for dry partitions

**Cat. Nos.: 893 70/71/72/73/74/75**

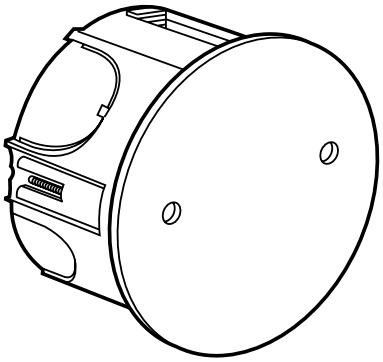

## 1. GENERAL CHARACTERISTICS

Junction boxes for dry partitions.

## 2. TECHNICAL CHARACTERISTICS

Case: yellow polypropylène
Cover: white polypropylène
Screws: bright galvanized steel (cover screws: nickel-plated steel).

| Cat. Nos. | Ext. boxes (mm) | Covers (mm) |
|---|---|---|
| 893 70 | Ø 67 x 40 | Ø 80 |
| 893 71 | Ø 85 x 40 | 100 x 100 |
| 893 72 | 115 x 115 x 40 | 140 x 140 |
| 893 73 | 160 x 105 x 40 | 190 x 135 |
| 893 74 | 170 x 170 x 50 | 195 x 195 |
| 893 75 | 230 x 170 x 50 | 225 x 210 |

Bottom can be knocked out (precut)
Supplied with cover and screws
Entries:

| Cat. Nos. | Sides | Bottom |
|---|---|---|
| 893 70 | - | - |
| 893 71 | - | - |
| 893 72 | 2 x 16 / 4 x 20 / 4 x 25 | 2 x 20 / 1 x 32 |
| 893 73 | 2 x 16 / 2 x 20 / 6 x 25 | 2 x 20 |
| 893 74 | 8 x 20 / 6 x 25 | 2 x 20 / 3 x 25 |
| 893 75 | 10 x 20 / 8 x 25 | 2 x 20 / 2 x 25 |

Min. and max. temperature:
- operation: - 5 to + 40° C
- installation : - 5 to + 60° C

## 3. MOUNTING

Boxes to be flush-mounted on plasterboard and plywood.

## 4. DIMENSIONS

