Dual AC Voltage

95-115 CFM



Model	P/N	Bearing (● VAPO ○ BALL ◉ Sleeve)	Rating Voltage (VAC)	Freq. (Hz)	Power Current (AMP)	Power Consumption (WATTS)	Speed (RPM)	Air Flow (CFM)	Static Pressure (Inch-H_2O)	Noise (dBA)	Weight (g)
SF1212AD	SL.GN	◉	115	50/60	0.27/0.24	21.5/19	2700/3100	95/115	0.33/0.38	44/49	550
			220-240	50/60	0.13/0.12	19.5/19	2700/3100	95/115	0.33/0.38	44/49	550
SF1212AD	BL.GN	○	115	50/60	0.27/0.24	21.5/19	2700/3100	95/115	0.33/0.38	44/49	550
			220-240	50/60	0.13/0.12	19.5/19	2700/3100	95/115	0.33/0.38	44/49	550

Frame : Aluminum alloy

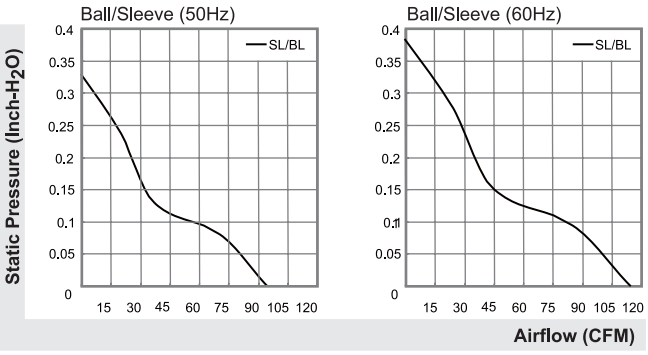

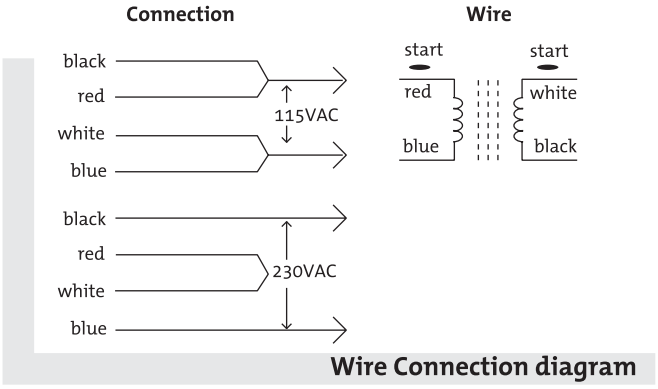

UNITS:mm

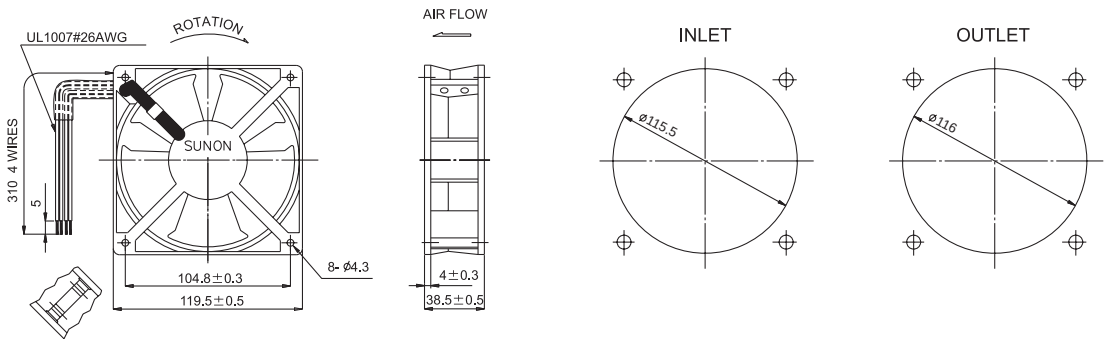

*All model could be customized on voltage or any other requirements to fit your need.
*Specifications subject to change without notice. Please Visit SUNON web site at http://www.sunon.com for update information.