Positioning element
for inductive encoders Ri-QR24
P6-RI-QR24

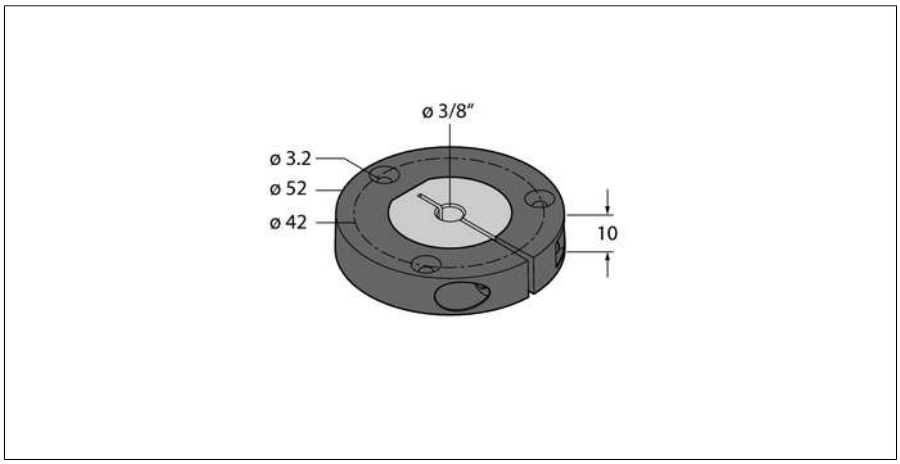

- **Positioning element, for Ø 3/8" shafts**

Type designation	P6-RI-QR24
Ident-No.	1590926
Housing material	Metal/Plastic

Edition • 2018-05-20T23:22:34+02:00

TURCK Inc. ● 3000 Campus Drive Minneapolis, MN 55441-2656 ● Phone: 763-553-7300 ● Application Support: 1-800-544-7769 ● Fax 763-553-0708 ● www.turck.com