E12553

Y connection cable

YDOGS040PLS0002H02

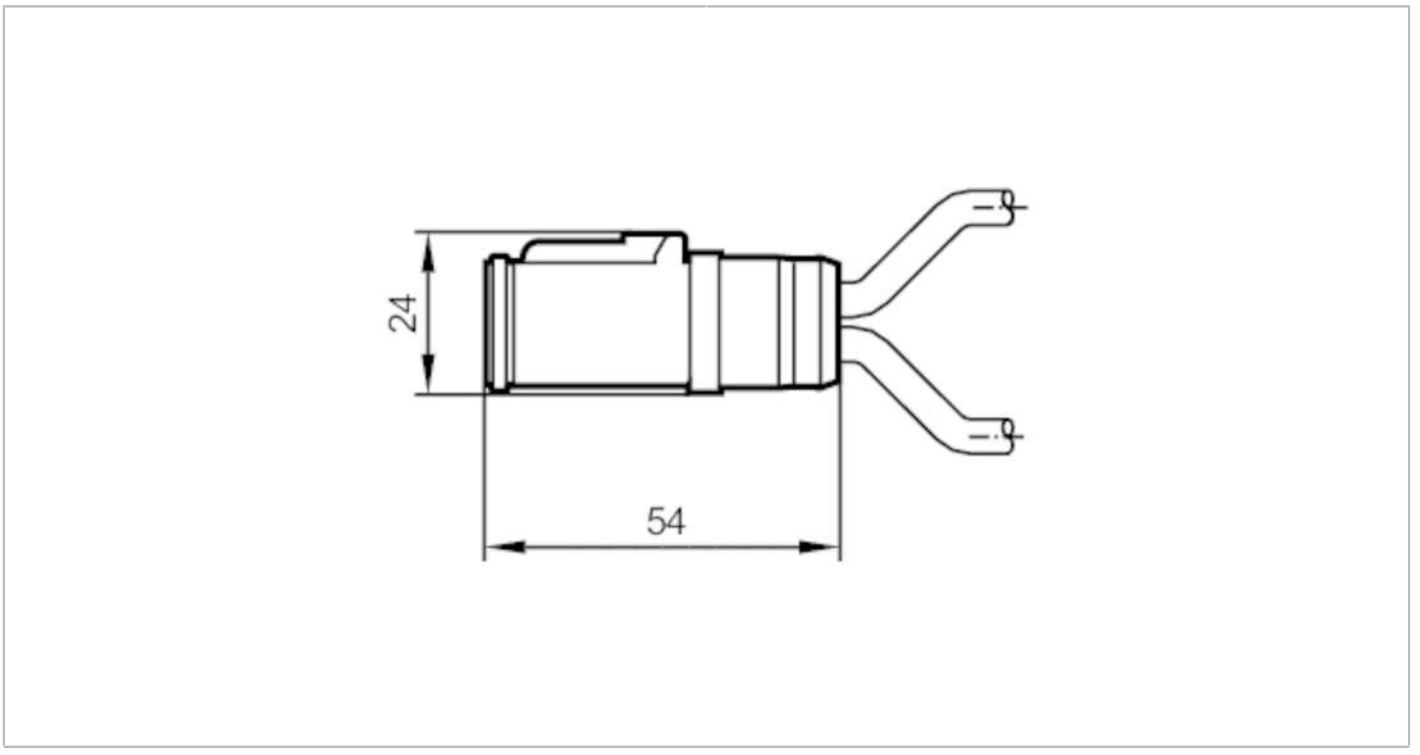

CE

Application			
Special feature		Free from silicone; Halogen-free; Drag chain suitability	
Free from silicone		yes	
Electrical data			
Operating voltage	[V]	8...32 DC	
Protection class		III	
Max. current load total	[A]	4	
Operating conditions			
Ambient temperature	[°C]	-40...85	
Ambient temperature (moving)	[°C]	-20...85	
Protection		IP 67; (mating connector plugged in)	
Mechanical data			
Weight	[g]	154.2	
Dimensions	[mm]	24 x 24 x 54	
Materials		PA	
Number of ports splitter box		2	
Drag chain suitability		yes	
Drag chain suitability		bending radius for flexible use	min. 10 x cable diameter
		travel speed	max. 3.3 m/s for a horizontal travel length of 5 m and max. acceleration of 5 m/s²
		bending cycles	> 5 Mio.
		torsional strain	± 180 °/m

E12553

Y connection cable

YDOGS040PLS0002H02

Remarks	
Pack quantity	2 pcs.

Electrical connection

Cable: 2 m, PUR, Halogen-free, black, Ø 5.4 mm; 2 x 0.50 mm² (28 x Ø 0.15 mm)

Electrical connection - socket

Connector: 1 x DEUTSCH connector, straight; Contacts: nickel-plated

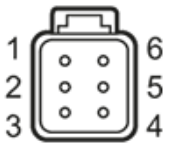

Connection

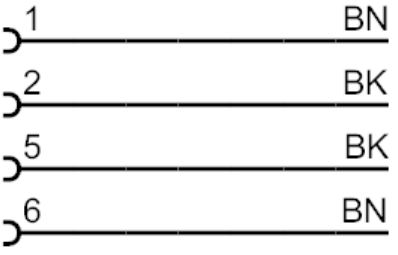

	Core colours :
BK =	black
BN =	brown