UGT582

UGQ00800E1KG/US

Ultrasonic sensors

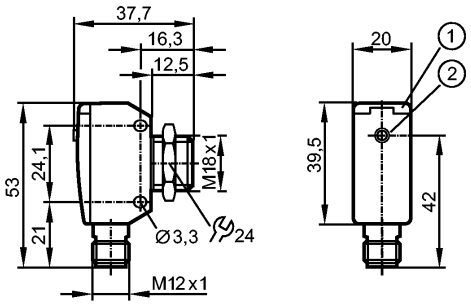

1: LEDs
2: teach button

Product characteristics		
Ultrasonic diffuse-reflection sensor		
Cube		
Connector		
Teach function		
Electrical data		
Electrical design		DC PNP
Operating voltage	[V]	10...30 DC
Current consumption	[mA]	< 35
Protection class		III
Reverse polarity protection		yes
Power-on delay time	[s]	0.1
Converter frequency	[kHz]	230
Inputs		
Teach		yes
Outputs		
Output function		1 x NO / NC programmable + 1 x current output
Current rating	[mA]	100
Voltage drop	[V]	2.2
Short-circuit protection		yes
Overload protection		yes
Analogue output		
current output	[mA]	4...20
Max. load	[Ω]	500
Switching frequency	[Hz]	5
Range		
Sensing range	[mm]	800
blind zone	[mm]	60

UGT582

UGQ00800E1KG/US

Ultrasonic sensors

Response curve	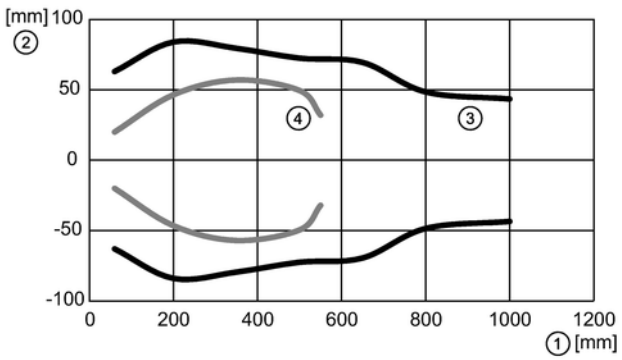 1: Distance; 2: Sound beam; 3: Target 100 x 100 mm; 4: Target Ø 25 mm	
Angle of aperture	[°]	± 7
Max. deviation from the 90° angle sensor / object	[°]	± 4
Accuracy / deviations		
Notes on the accuracy / deviation		The indicated values are reached after a warm-up time of ≥ 20 minutes
Temperature compensation		yes
Hysteresis	[%]	< 1
Switch-point drift	[%]	± 2
Linearity error	[%]	≤ 1
Resolution	[mm]	3
Repeatability	[%]	< 0.7
Environment		
Ambient temperature	[°C]	-20...70
Protection		IP 67
Tests / approvals		
EMC		EN 61000-4-2 ESD: 4 kV CD / plastics 8 kV AD / metal EN 61000-4-3 HF radiated: 3 V/m EN 61000-4-4 Burst: 2 kV EN 61000-4-6 HF conducted: 3 V EN 55011: class A
Vibration resistance		(10-55) Hz 1 mm amplitude, oscillation period 5 min., 30 min. per axis at resonance or 55 Hz EN 60068-2-6 Fc
Shock resistance		EN 60068-2-27 Ea yes
Mechanical data		
Housing materials		1.4542; PBT; polyamide; Epoxid-Glaskeramik
Weight	[kg]	0.095
Displays / operating elements		
Display		Switching status 1 LED yellow Echo LED 1 LED green
Electrical connection		
Connection		M12 connector
Wiring		

UGT582

UGQ00800E1KG/US

Ultrasonic sensors



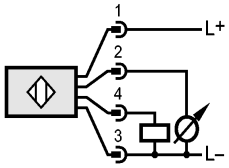

Accessories

Accessories (included)	1 stainless steel lock nut

Remarks

Remarks	cULus - Class 2 source required
Pack quantity [piece]	1