

Motor protection in potentially explosive atmospheres

The essentials of selecting protective devices

- IECEx, ATEX and EN standards
- Zones, categories and equipment
- Equipment marking
- Portfolio overview

Gases, vapors, mist or dust mixed with air can form a flammable mixture-a potentially explosive atmosphere. Electrical equipment installed in such locations must be designed and tested to ensure that it will not cause arcing or high temperatures that could provide a source of ignition.

This brochure provides information on the regulations, standards, definitions and equipment requirements for protective devices for motors in potentially explosive areas.

Table of contents

005 Definition of a potentially explosive atmosphere

006 Understanding the standards

008 Main standards

010 Equipment grouping

012 Zones, categories and equipment

014 Flameproof certification marking example

015 Safety functions

016 Selection and installation of protective devices

017 Motor starting and safety portfolio



Oil and gas

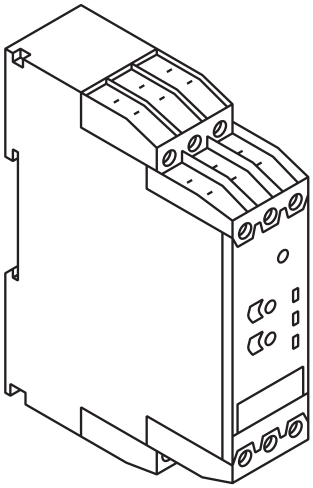

Thermistor motor protection relay



Pharmaceutical industry

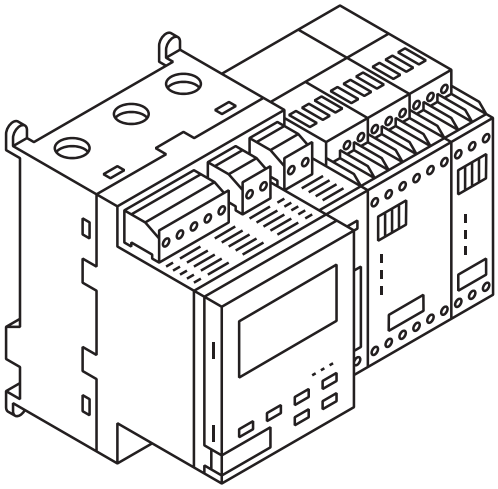

Universal motor controllers



Chemical industry

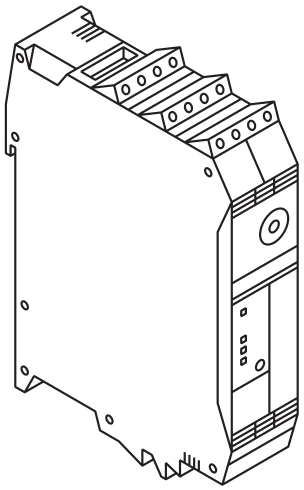

Electronic compact starters



Mining



Marine



Power generation

Potentially explosive atmospheres
Motor starting and protection solutions

Potentially explosive atmospheres occur in a wide range of industries. Wherever flammable gases, mist, vapors or dust mix with air, they can create the risk of an explosion.

Universal motor controllers, thermistor motor protection relays, manual motor starters, thermal and electronic overload relays, electronic compact starters, safety switches and power supplies can all be found controlling and protecting motors in potentially explosive atmospheres.

The area where this possibility exists is defined as a potentially explosive atmosphere. These atmospheres can be found in many industries, from chemical, pharmaceutical and food, to power generation and wood processing. The areas may also be known as “hazardous areas” or “hazardous locations.” The number of substances that are flammable when mixed with air is very large.

This means there are many industrial sectors that can have a potentially explosive atmosphere in their process. Some of these are not so obvious - for example, saw mills by default are not a potentially explosive atmosphere, but if sawdust is allowed to collect in large amounts in one area, that area can become one.

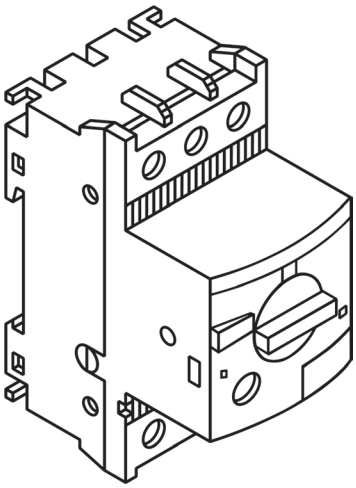

Manual motor starters

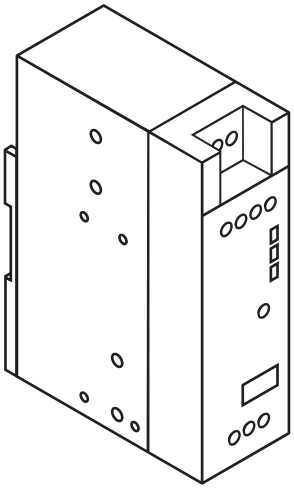

Power supplies



Food and beverage industry



Textile industry



Saw mills



Water treatment plants

Understanding the standards for explosive atmospheres

Globally, there are many regulations and certification systems with different requirements. The technical requirements in these regulations are becoming increasingly harmonized with the global IEC standards.

IECEx
The IECEx system (www.iecex.com) – from the International Electrotechnical Commission, is a voluntary certification system that verifies compliance with IEC standards related to safety in explosive atmospheres. IECEx covers four main areas:
- Certification of service facilities
- IECEx equipment certification
- Ex marking conformity
- Certification of personnel competencies

IECEx Conformity Mark System
In order for equipment to receive a conformity “Ex” marking under IECEx, it must obtain a certificate of conformity. This requires:
- An accepted IECEx Quality Assessment Report (QAR)
- An accepted IECEx Test Report for type testing (ExTR)

The IECEx conformity mark confirms that the product has the appropriate protection for use in explosive atmospheres (under consideration of the classification of the zone) and that it has been manufactured under a system subject to ongoing surveillance by certification bodies. The marking also indicates that the product can be supplied to the market without the need for additional testing.

European Directives
Commonly referred to as ATEX, from the French “ATmosphères EXplosibles”, the European regulations combine two EU directives:
- the Worker Protection Directive (1999/92/EC)
- the Product Directive (2014/34/ EU).

The EU Directives have some difference from IECEx, and they do not include certification of service facilities or certification of personnel competencies. Compliance with the “Essential Health and Safety Requirements” described in the directives is mandatory within EU countries. The easiest way to show compliance is to follow harmonized standards.

Protective devices
Protective devices are often required by IEC / EN 60079 series of standards for safe operation of Ex equipment. Protective devices can be located inside or outside explosive atmospheres.

Protective devices for Ex equipment and products fall within the scope of the ATEX regulations: The harmonized standard EN 50495:2010.IECEx does not have an applicable standard for electrical safety devices for Ex equipment, and therefore certification can only be done according to ATEX.





Main standards for explosive atmospheres around the world

IEC and EN standards

- IEC / EN 60079-0:
  Equipment – General requirements
- IEC / EN 60079-1:
  Equipment protection by flameproof enclosures “d”
- IEC / EN 60079-7:
  Equipment protection by increased safety “e”
- IEC / EN 60079-10:
  Classification of hazardous areas (gas areas)
- IEC / EN 60079-10-1:
  Classification of areas – Explosive gas atmospheres
- IEC / EN 60079-10-2:
  Classification of areas – Combustible dust atmospheres
- IEC / EN 60079-14:
  Electrical installations design, selection and erection
- IEC / EN 60079-15:
  Equipment protection by type of protection “n” (no longer applicable to rotating machines)
- IEC / EN 60079-17:
  Electrical installations inspections and maintenance
- IEC / EN 60079-19:
  Equipment repair, overhaul and reclamation
- IEC / EN 60079-31:
  Equipment dust ignition protection by enclosure “t”

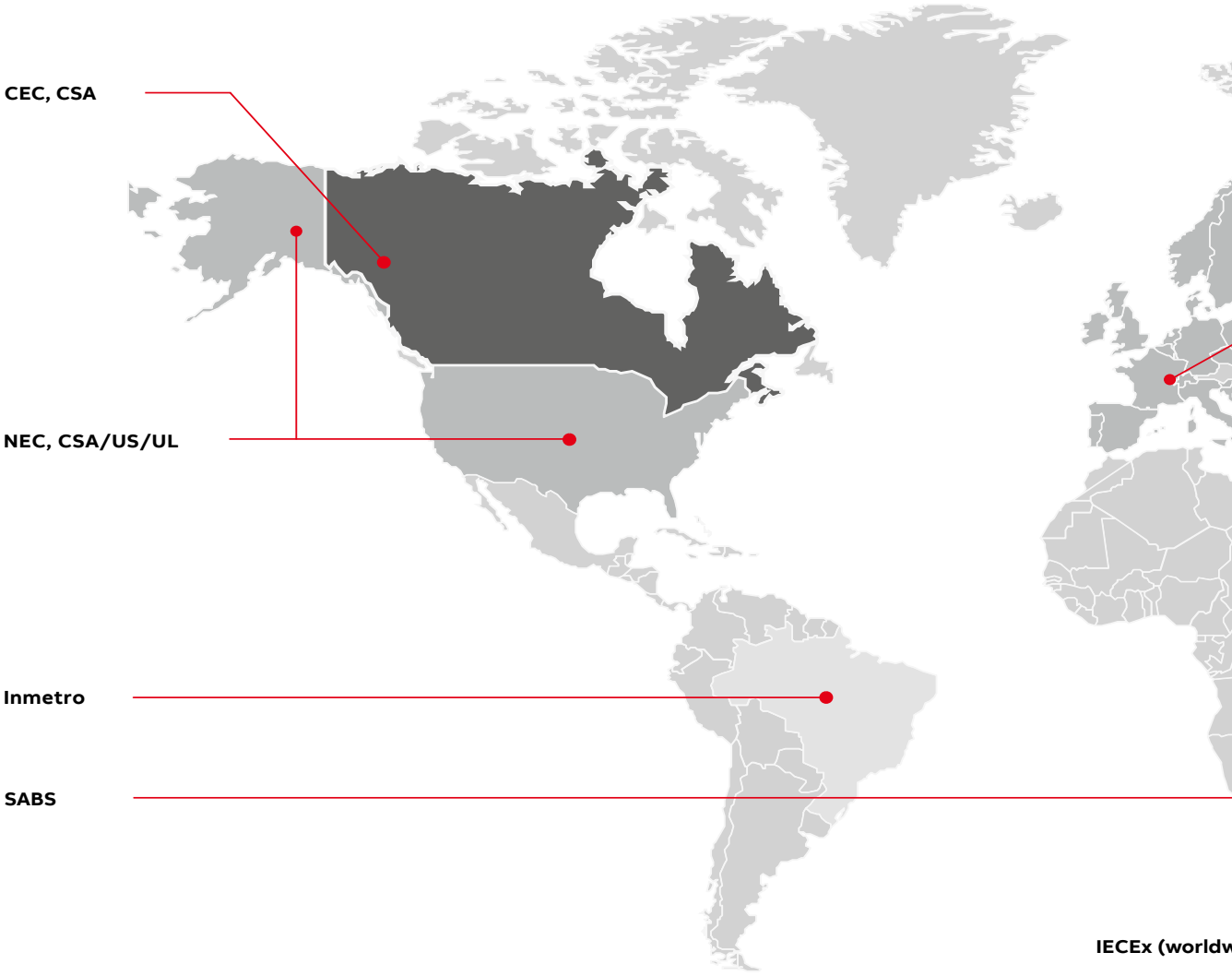

ATEX directives
The Worker Protection Directive (1999/92/EC) specifies the minimum health and safety requirements for working in potentially explosive atmospheres.

The Product Directive (2014/34/EU) specifies requirements for equipment that is used in potentially explosive atmospheres. It also specifies the requirements for protective systems that are needed for equipment protection.

In addition to IECEx and ATEX there are several local standards that may be in effect in certain countries.

Other standards
Many countries have regulations concerning both the design and use of electrical devices in potentially explosive atmospheres, and these may differ. These regulations have become increasingly harmonized within the framework of IEC recommendations and European standards. National requirements may still need to be met for final approval of installation (e.g. in Brazil, Australia or Japan), but they generally relate to one of the main standards below.

- IEC: International Electrotechnical Commission
- EN: European standard
- NEC/CEC: National Electrical Code / Canadian Electric-Code (500 or 505) in North America

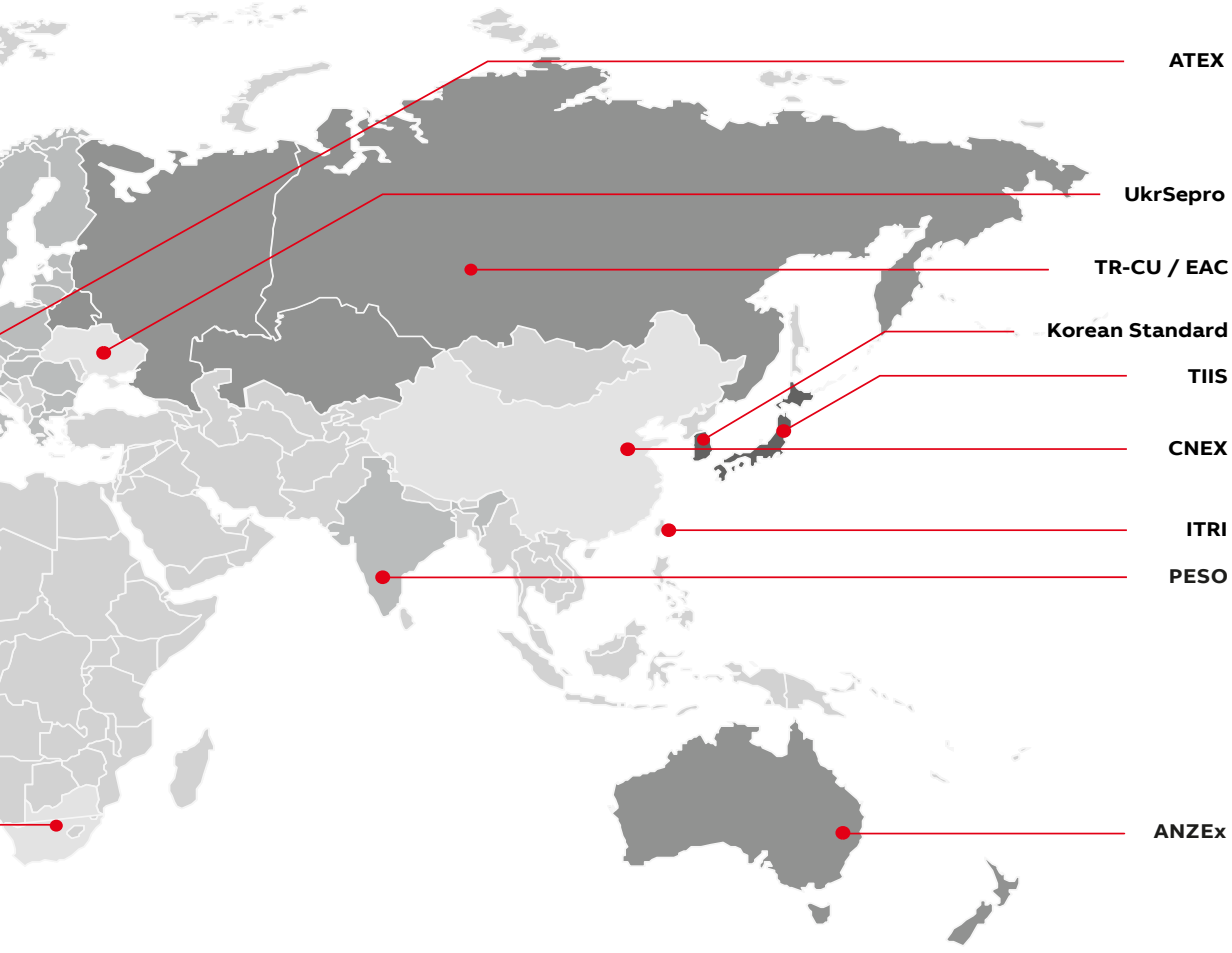

vide)

Equipment grouping for potentially explosive atmospheres

Internationally, the IEC / EN 60079-0 directive defines three groups for potentially explosive atmospheres while the product directive defines two based on where the equipment is used.

Groups

- Group I covers underground mines or mines susceptible to firedamp.
- Group II relates to surface environments with gas.
- Group III to surface environments with dust.

The Product Directive defines only two groups:

- Group I for underground mines or mines endangered by firedamp and/or combustible dust
- Group II for all surface installations.

The group designation is essentially based on where equipment can be used (equipment classification).

Relationships between ATEX directives

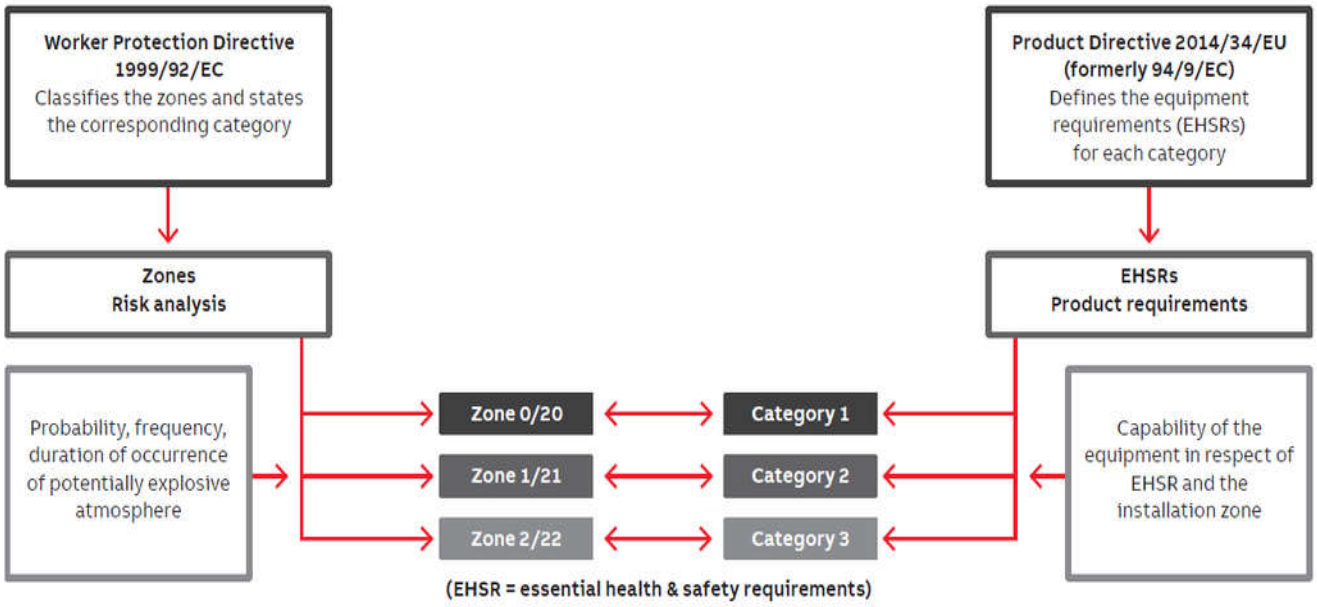

Manufacturer

The manufacturer is responsible for product safety and for delivering installation and maintenance instructions. The Product Directive guides the manufacturer to prepare the product classification and to certify the product and production.

End user

The end user is responsible for ensuring that the product is installed, maintained and operated in a way that does not pose any risk of explosion. The Worker Protection Directive guides end users to use certified products and to prepare risk analysis, safety instructions, training and procedures for operation and maintenance.

Subgroups and temperature classes

Explosive gases, vapors and dusts have different chemical properties that affect the likelihood and severity of an explosion. Such properties include flame temperature, minimum ignition energy, upper and lower explosive limits, and molecular weight. Based on the nature of the explosive gas/dust, gases are grouped into IIA, IIB and IIC and dusts into IIIA, IIIB and IIIC.

Temperature classes are defined for equipment based on its maximum surface temperature. When selecting a piece of equipment for a potentially explosive atmosphere, the maximum surface temperature of the equipment must be lower than the ignition temperature of the potential gas or dust mixture.

—

Dust classification

		TCL (cloud) (°C)	T5mm (layer) (°C)	Surface temp. provided that dust layer below 5mm
Food/feed industry	Wheat	350	270	195
	Barley, corn	380	280	205
	Sugar	350	430	233
Natural materials	Wood	330	280	205
	Charcoal	520	230	195
	Hard coal	460	240	165
Chemicals	PVC	450	330	255
	Synth. rubber	470	220	145
	Sulfur	240	250	160

—

Dust subdivision

IIIA	Combustible flyings
IIIB	Non-conductive dust
IIIC	Conductive dust

—

Gas classification

Temp. class	Ignition temp. of gas/vapor (°C)	Max. permitted temp. of equipment (°C)	Gas examples
T1	> 450	450	Hydrogen
T2	>300 but <450	300	Ethanol
T3	>200 but <300	200	Hydrogen sulfide
T4	>135 but <200	135	Diethyl ether
T5	>100 but >135	100	-
T6	>85 but <100	85	Carbon disulfide

—

Gas subdivision

IIA	Approx. 120 gases and vapors, e.g. butane/petroleum/propane
IIB	Approx. 30 gases and vapors, e.g. ethylene/dimethyl ether/coke oven gas
IIC	Three gases: hydrogen (H_2)/acetylene (C_2H_2) /carbon disulfide (CS_2)

Zones, categories and equipment

Within industries, all potentially explosive atmospheres are required to have an hazardous area classification, called zones.

Zones

The zone system is used all over the world, and nowadays is also accepted as an alternative system in North America. The authorities normally determine the area, but that can also be performed by a third party; a notified body, or other experts. It is the owner's responsibility to ensure that their site is classified before suitable products can be selected and installed at the location.

Globally, the zone system is used to classify potentially explosive areas. The Worker Protection Directive and the international standards IEC / EN 60079-10-x define these zones.

In all cases, classifying the zone is the responsibility of the owner of the site where the potentially explosive atmosphere exists.

There are six zones:

- Zones 0 (for gas) and 20 (for dust), where there is a continuous presence of an explosive atmosphere.
- Zones 1 (for gas) and 21 (for dust), where there is an occasional occurrence of a potentially explosive atmosphere.
- Zones 2 (for gas) and 22 (for dust), where potentially explosive atmospheres can occur by accident, but not during normal operation.

—

Equipment groups and Zones according to IECEx and ATEX

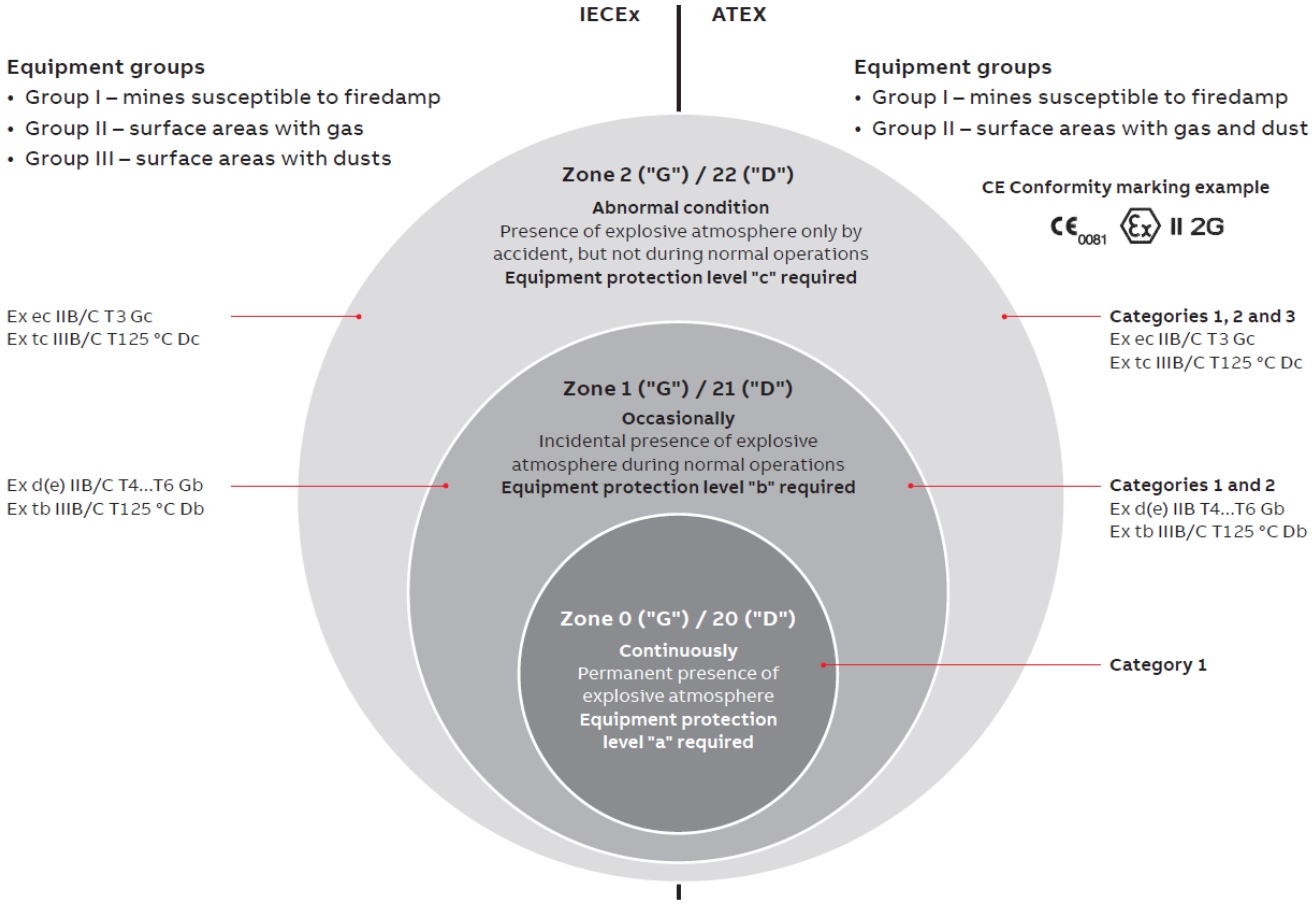

Equipment categories

Equipment categories are used in the ATEX directive. The category indicates which safety level must be used in each zone. In zone 0/20, category 1 devices must be used; in zone 1/21, category 2 devices; and in zone 2/22, category 3 devices.

Classification into categories is particularly important, because all the inspection, maintenance and repair duties of the end user will depend on the category of the product/ equipment, not on the zone where it is installed.

Equipment protection levels (EPL)

The latest revisions of the IEC and EN standards include the concept of “equipment protection levels” (EPLs), which identify products according to the ignition risk they might cause. EPL also considers the potential consequences of an explosion. For zone 0/20, the equipment protection level required would be “a”; for zone 1/21, it would be “b”; and for zone 2/22, the level would be “c”.

—

Selection of the protective devices according to the zone and category/EPL

Standard IEC 60079-0 EN 60079-0			**Zone according to IEC 60079-10-x EN 60079-10-x**	**ATEX Directive 2014/34/EU (previously 94/9/EC)**	
Group	**EPL**	**Protection level**	**Zones**	**Equipment group**	**Equipment category**
I (Mines)	Ma	Very high	The zone classification is not used in mines.	**I (Mines)**	M1
	Mb	High			M2
II (Gas)	Ga	Very High	0	**II (Surface)**	1G
	Gb	High	1		2G
	Gc	Enhanced	2		3G
III (Dust)	Da	Very high	20		1D
	Db	High	21		2D
	Dc	Enhanced	22		3D

—

An example of zone definitions by a storage tank

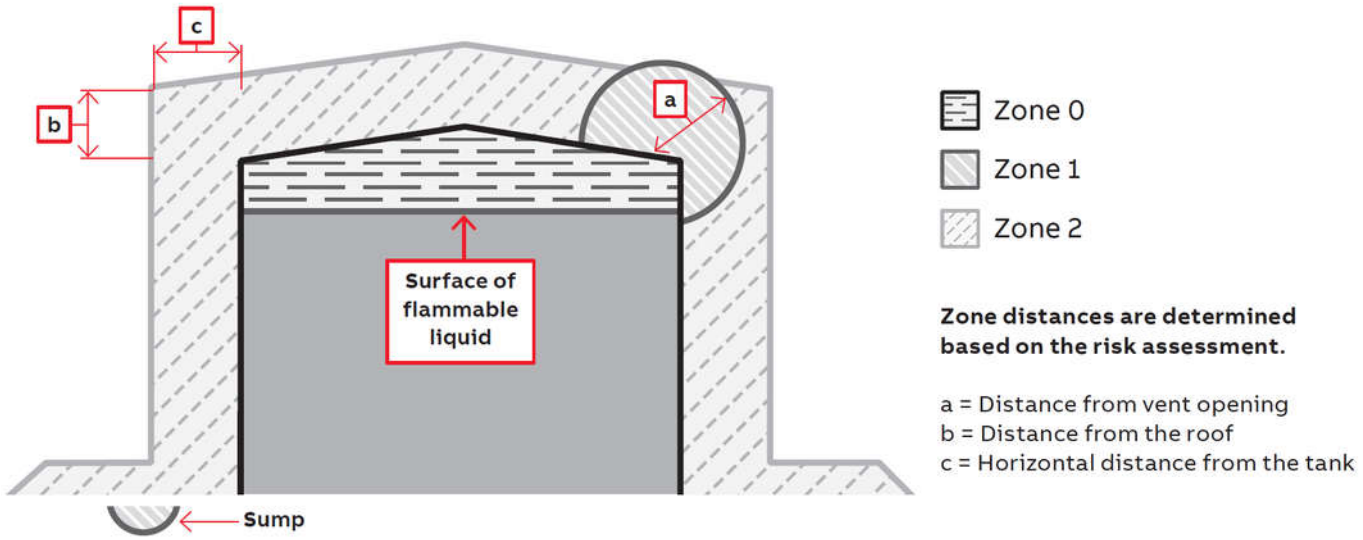

Flameproof certification marking according to IECEx and ATEX

There are two different markings on the equipment- for IEC and EN standards and the complementary marking according to the ATEX directive.

Equipment protection marking according to IEC and EN standards

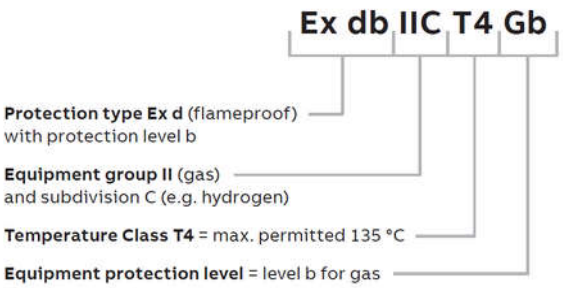

Complementary marking according to the ATEX directive

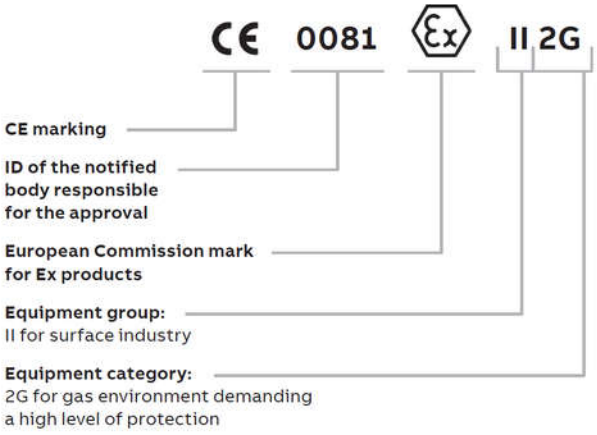



ATEX-certified safety functions

Under ATEX, protective devices must be certified and marked. The marking of a protective device can be found on the device in which it is integrated.

The ATEX marking for the protective device relates only to the safety function integrated into that device. The marking does not indicate that this protective device has been tested and certified with a motor. The protective devices do not typically have an Ex protection enclosure.

Therefore, they can only be located outside potentially explosive atmospheres. In the ATEX conformity marking, this is indicated by parentheses around the equipment category number, e.g. (2).

Example of protective device marking

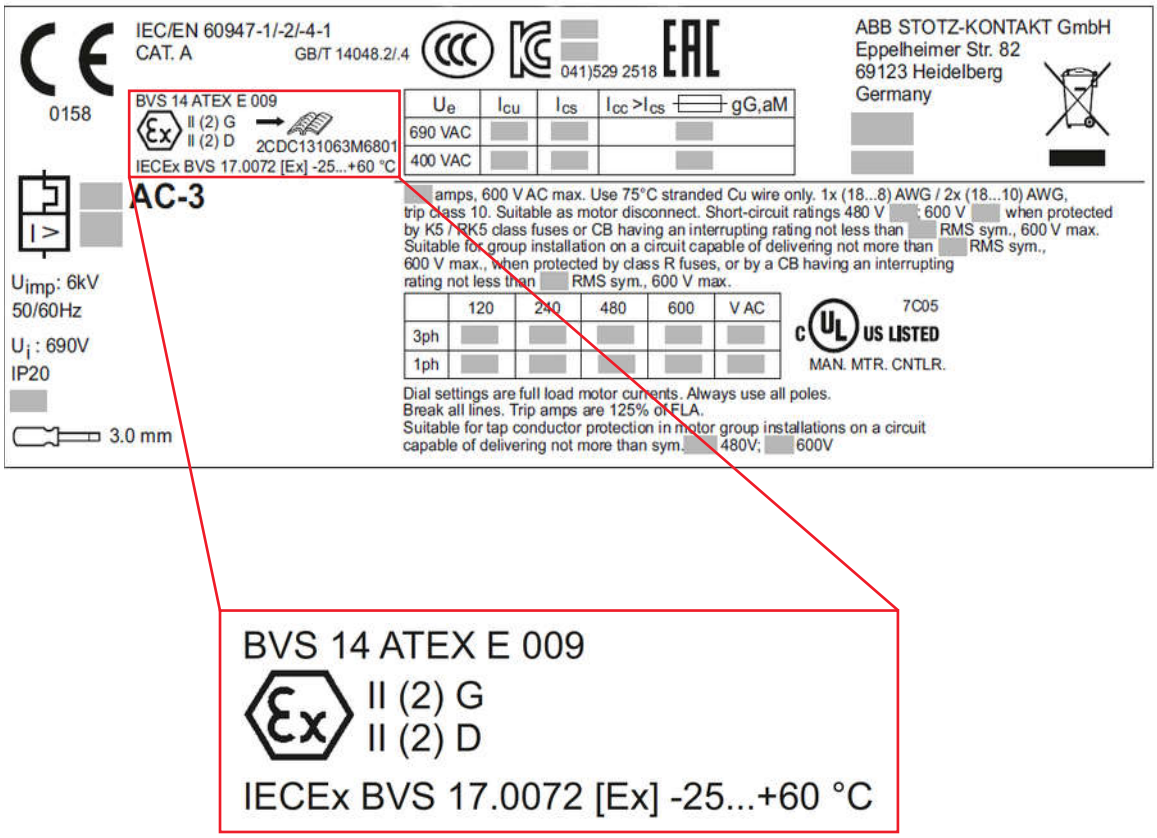

Parentheses indicate that a safety device can be used to protect products with equipment categories 2 and 3, but the protective device itself.

Selection and installation of protective devices in explosive atmospheres

Selection and installation of protective devices in explosive atmospheres
In selecting a motor with protective devices for explosive atmospheres, the motor manufacturer's instructions and recommendations must be followed. Since only the motor can be installed in a potentially explosive atmosphere, with the protective devices always kept in a safe area, the instructions are intended to prevent the motor from overheating or creating any sparks. To ensure safe operation, certain issues need to be considered when selecting a motor together with a protective devices.

Service and maintenance
Regular servicing is required to maintain the safety of electrical systems in hazardous areas. Some of the most important safety measures are:

- Carrying out work on live electrical systems and equipment is prohibited in hazardous areas. Work on intrinsically safe circuits is a permissible exception.
- In hazardous areas, grounding or short-circuiting is only permissible if there is no danger of explosion.
- In the case of all work carried out in hazardous areas, there must be no possibility of ignitable sparks or excessively hot surfaces occurring that cause an explosion a potentially explosive atmosphere.



ABB's portfolio for motor starting and protection solutions in hazardous areas

Many products related to industrial controls, such as overload relays and motor protection switches, are intended for switching and controlling devices in potentially explosive atmospheres while the switchgear itself is outside the potentially explosive atmosphere. This equipment is marked with the category of electrical equipment to be protected, the category is enclosed in parentheses, e.g. B: Ex II (2) GD.

Such kind of protective devices are authorized under device group II, category (2) in the "G" area (areas with potentially explosive gas, steam, smoke or air mixtures) and additionally for the "D" area (areas with combustible dust). This protective devices is not suitable for installation or operation in potentially explosive areas. When using the devices in potentially explosive areas, preventive measures must be taken, e. g. within a suitable enclosure.



Protective device	Type of protection	Voltage	Current
Universal motor controller	II (2) G [Ex e] [Ex d] [Ex px] II (2) D [Ex t] [Ex p]	up to 1000 V	63 / 850 A
Thermistor motor protection relay	II (2) GD	up to 690 V	-
Manual motor starter	II (2) G II (2) D	up to 690 V	up to 80 A
Thermal overload relay	II (2) GD	up to 690 V	up to 200 A
Electronic overload relays	II (2) G [Ex e] [Ex d] [Ex px] II (2) D [Ex t] [Ex p]	up to 690 V	up to 750 A
Electronic compact starter	II (2) G [Ex e] [Ex d] [Ex px] II (2) D [Ex t] [Ex p]	up to 500 V	up to 9 A
Power supplies	II (3) G [Ex n] [Ex e]	22.5 - 28.5 V DC*	up to 30 A (per channel)
Safety switches	III (3) C [Ex tc]	up to 690 V	up to 125 A

* Adjustment range of the output voltage

For more details, go to:
new.abb.com/low-voltage/products/explosion-protective-components-systems

UNIVERSAL MOTOR CONTROLLER UMC100.3



The Universal Motor Control UMC100.3 is future ready – and ready to take motor control to the next level. With outstanding user experience, unrivaled communication, and simple configuration, smooth running of your operations has never been so effortless.

Intelligent ABB motor controllers combine motor protection and control functions, fieldbus and Ethernet communication, and fault diagnosis in just one device. It provides detailed operational, diagnostic and service data continuously, providing an effective data source for modern predictive maintenance systems in any plant.

Benefits

- Reduce wiring time, space requirements and cost
- Fast replacement times mean less downtime
- Commissioning time savings
- Seamless integration into ABB Ability™ System 800xA platform
- Variety of communication interfaces
- Safe motor shutdown

Features

- Max 1000 V AC motor voltage
- Suitable for single- and three-phase motors
- Rated motor current from 0.24 to 63 A, without accessories
- Up to 850 A with additonal current transformers CT4L and CT5L
- Tripping classes 5, 10, 20, 30, 40 in accordance with EN/IEC 60947-4-1
- Flexible mounting of communication interfaces inside and outside drawers
- Standard fieldbus connection and wiring

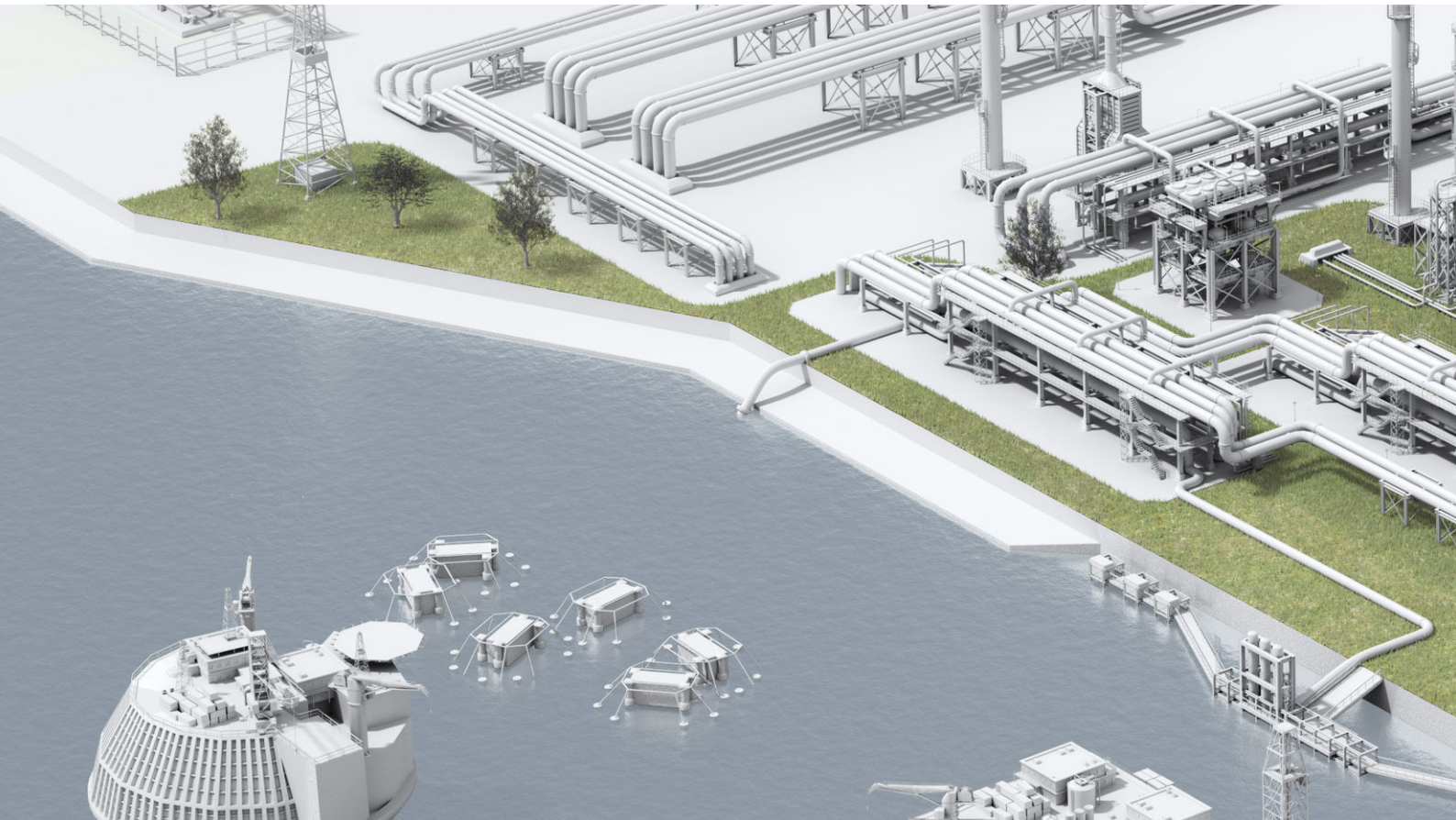

THERMISTOR MOTOR PROTECTION RELAY CM-MSS



The thermistor motor protection relays of the CM-MSS range monitor the winding temperature of motors which have PTC temperature sensors installed. These sensors are incorporated in the motor windings thus measuring the motor heat directly. This direct temperature measurement enables the thermistor motor protection relays to evaluate various motor conditions such as overheating, overload and insufficient cooling. ATEX approval is available for the use in hazardous areas.

Benefits

- Easy to use due to the ability to distinguish between different operational states and faults
- Check the status of the application by reading the front-face LEDs
- Fast and reliable wiring by using the push-in variant of the CM-MSS range
- Completely tool-free mounting and de-mounting simplifies the installation process
- Adjustments by the front faced DIP switches, which are covered by the marker label

Features

- Approved by local and international standards for many applications such as the renewable energy and marine sectors and other industries
- Short-circuit and dynamic wire break detection
- Wide control supply voltage rang 24-240 V AC/DC
- Non-volatile fault storage reset, remote reset
- Coverage of many internationally valid approvals and markings ensure best quality and compliance with the latest version of the product standard DIN EN 60947-8:2013-07 and IEC/EN 60947-8.



MANUAL MOTOR STARTERS MS132 AND MS165



Manual motor starters are electromechanical protection devices for the main circuit. They are used mainly to switch motors manually ON/OFF and to provide fuseless protection against short-circuit, overload and phase failures. Fuseless protection saves costs, space and ensures a quick reaction under short-circuit condition by switching off the motor within milliseconds. Starter combinations are set up together with contactors.

Benefits

- Harmonized main accessory range (auxiliary contacts, signal contacts, shunt trips and undervoltage releases) for the MS1xx and MO1xx family
- Compact design
- Efficient planning and installation perfectly matching the ABB contactor family
- Simple connecting links ensure electrical and mechanical connection to build direct on-line starters
- Less machine downtime by protecting motors and reduced troubleshooting

Features

- Manual control / short-circuit current and overload protection
- Adjustable current setting for overload protection and magnetic trip indication
- Disconnection function
- Remote control via undervoltage release or shunt trip
- Short-circuit service breaking capacity Ics up to 100 kA
- Phase loss sensitivity
- MS132 from 0.1 up to 32 A
- MS165 from 10 up to 80 A

THERMAL OVERLOAD RELAYS TF AND ELECTRONIC OVERLOAD RELAYS EF



Overload relays offer reliable protection for motors in the event of overload or phase failure. Thermal overload relays are economic electromechanical protection devices for the main circuit. Electronic overload relays offer reliable and precise protection for motors. Both can make up a compact starting solution together with contactors.

Benefits

- Reliable protection for motors
- Easy to create starters
- Optimized match to ABB contactors
- Electronic overload relays reduced logistic costs and improved designed by three trip classes in one device
- Single mounting kits and wire reset for remote control available for specific applications.

Features

- Thermal overload TF relays with trip class 10
- Electronic overload relays EF with selectable trip class (10E, 20E, 30E)
- Rated motor current from 0.1 A to 1250 A
- Adjustable current setting ranges
- Overload protection with phase loss sensitivity
- Automatic or manual reset, sealable.

ELECTRONIC COMPACT STARTERS



ABB's electronic compact starter packs more functions into less space. The compact unit is just 22.5 mm wide and is suitable for three-phase motor loads up to 3 kW - 400 V AC. Direct on-line and reversed starter with overload protection and emergency stop versions are available, making the range a perfect fit for high frequent and reliable long life switching of e.g. paper machines, conveyors, pumps, compressors and machine tools.

Benefits

- Direct on-line and reverse starter, overload protection trip class 10 A, emergency stop functionality integrated all in one device
- Mulitfunctional product in only 22.5mm width
- Single and group mounting possibilities
- Lifespan of 30 Million electrical switching cycles
- Switching frequency of 2 Hz

Features

- Motor control up to 3 kW / 400 V AC and 9 A for resistive loads
- Combination with ABB's Sentry Safety Relay SSR10 to achieve highest safety standard SIL 3 and PL e certified
- Short-circuit protection with ABB's MO132 for single and group mounting of electronic compact starter
- Controlled via 24 V DC PLC output

CP-C.1 POWER SUPPLIES



The CP-C.1 power supplies are ABB's high-performance and most advanced range. With excellent efficiency, high reliability and innovative functionality it is prepared for the most demanding industrial applications. These power supplies have a 50 % integrated power reserve and operate at an efficiency of up to 94 %. They are equipped with overheat protection and active power factor correction. Combined with a broad AC and DC input range and extensive worldwide approvals the CP-C.1 power supplies are the preferred choice for professional DC applications.

Benefits

- Power reserve and switching of high peak currents keep your application running
- High efficiency of up to 94 % leads to less energy consumption thus saving money and space while avoiding development of heat
- Reliable in harsh environments due to application under extreme temperatures conditions
- Coated PCBA version for hazardous locations available
- Additional redundancy unit CP-C.1-A-RU available to establish true redundancy

Features

- Rated output voltage 24 V DC
- Rated output currents 5 A, 10 A, 20 A
- Rated output powers 120 W, 240 W, 480 W
- High efficiency up to 94 %
- Free convection cooling (no forced cooling with ventilators)

SAFETY SWITCHES



ATEX safety switches prevent accidental start of machinery while maintenance is in progress, reducing the risk of electrical and mechanical accidents. They are designed for zone 22, endure conductive dust and the enclosure has a maximum temperature of 70°C. They are delivered with an auxiliary contact that can be used for electrical interlocking. This is done by connecting the safety switch to a starter or other motor control devices.

Benefits

- The enclosures are made of high quality, UV-resistant materials
- Degree of protection is IP65, therefore suitable for indoor and outdoor use
- EMC approved, can be used in environment with electromagnetic disturbances
- Cover interlock: it prevents the cover from opening while the switch is in ON position

Features

- The range covers from 16 to 125 A, with power ratings from 7. 5 to 45 kW up to 690 V (IEC, AC-23 A).
- 3, 4 and 6 pole versions
- Front operation
- The enclosure is made of dye cast aluminum
- Auxiliary contact included

ABB STOTZ-KONTAKT GmbH
Eppelheimer Straße 82
69123 Heidelberg
Germany

You can find the address of your local sales organization on the ABB homepage

abb.com/lowvoltage

Additional information
We reserve the right to make technical changes or modify the contents of this document without prior notice. With regard to purchase orders, the agreed particulars shall prevail. ABB AG does not accept any responsibility whatsoever for potential errors or possible lack of information in this document.

We reserve all rights in this document and in the subject matter and illustrations contained therein. Any reproduction, disclosure to third parties or utilization of its contents – in whole or in parts – is forbidden without prior written consent of ABB AG.

© Copyright 2019 ABB. All rights reserved.
Specifications subject to change without notice.

2CDC003089B0201 Rev. B (09/2019)