Inductive sensor
Bi8U-Q10-AP6X2-V1131

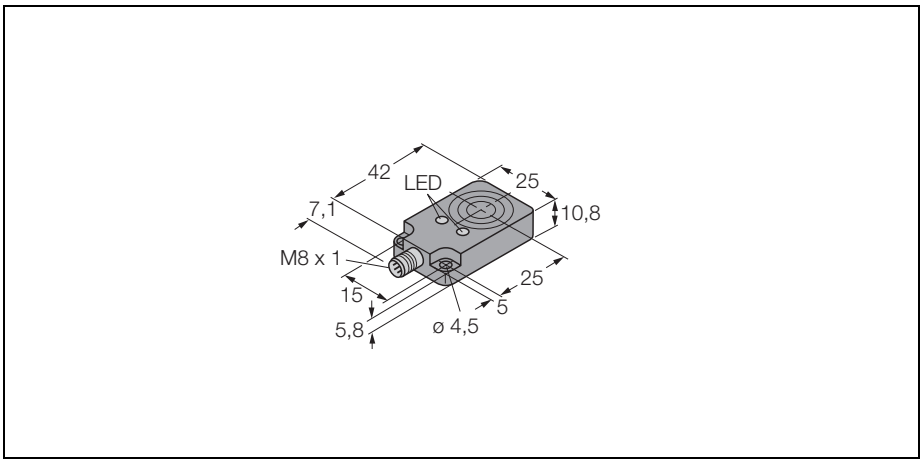

Type	Bi8U-Q10-AP6X2-V1131
Ident-No.	1662002
Rated operating distance Sn	8 mm
Mounting condition	flush
Assured sensing range	≤ (0,81 x Sn) mm
Repeatability	≤ 2 %
Temperature drift	≤ ± 10 %
	≤ ± 15 %, ≤ -25 °C v ≥ +70 °C
Hysteresis	3… 15 %
Ambient temperature	-30…+ 85 °C
Operating voltage	10… 30VDC
Residual ripple	≤ 10 % U_{ss}
DC rated operational current	≤ 200 mA
No-load current I_0	≤ 15 mA
Residual current	≤ 0.1 mA
Rated insulation voltage	≤ 0.5 kV
Short-circuit protection	yes / cyclic
Voltage drop at I_e	≤ 1.8V
Wire breakage / Reverse polarity protection	yes / complete
Output function	3-wire, normally open, pnp
Insulation class	⧈
Switching frequency	≤ 0.25 kHz
Housing	rectangular, Q10
Dimensions	42 x 25 x 10.8 mm
Housing material	plastic, PBT-GF30-V0
Material active face	plastic, PBT-GF30-V0
Connection	connectors, M8 x 1
Vibration resistance	55 Hz (1 mm)
Shock resistance	30g (11 ms)
Degree of protection	IP67
Operating voltage display	LED green
Display switch state	LED yellow

- **rectangular, height 10.8mm**
- **top active face**
- **Plastic, PBT-GF30-V0**
- **factor 1 for all metals**
- **magnetic field immune**
- **extended temperature range**
- **high switching frequency**
- **3-wire DC, 10…30 VDC**
- **normally open, pnp output**
- **connector, M8 x 1**

Wiring diagram

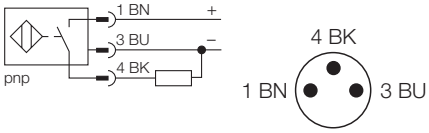

Functional principle

Inductive sensors are designed for wear-free and non-contact detection of metal objects. Due to a ferrite-less 3-coil system, uprox factor 1 sensors have distinct advantages. They detect all metals at the same switching distance, are magnetic field immune and feature large switching distances.

• Edition: • 25.11.2008

Inductive sensor
Bi8U-Q10-AP6X2-V1131

Mounting instructions	minimum distances
Distance D	2 x B
Distance W	3 x Sn
Distance S	1 x B
Distance G	6 x Sn

Width of the active face B	25 mm

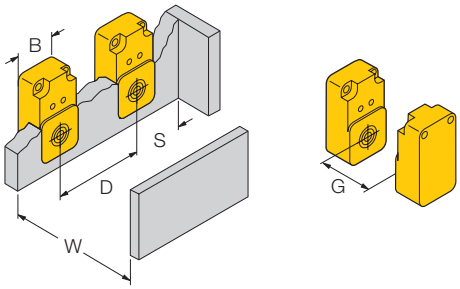

• Edition: • 25.11.2008

Inductive sensor
Bi8U-Q10-AP6X2-V1131

Accessories

Type code	Ident-No.	Short text	Dimension drawing
MW-Q08/Q10	6945007	mounting bracket; material VA 1.4301	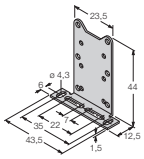

• Edition: • 25.11.2008