Brand of NTN Group

Technical data

CUC210-31

Insert bearings



Cylindrical outer diameter, fixing by socket set screw, seal with slinger

VISUAL (S)

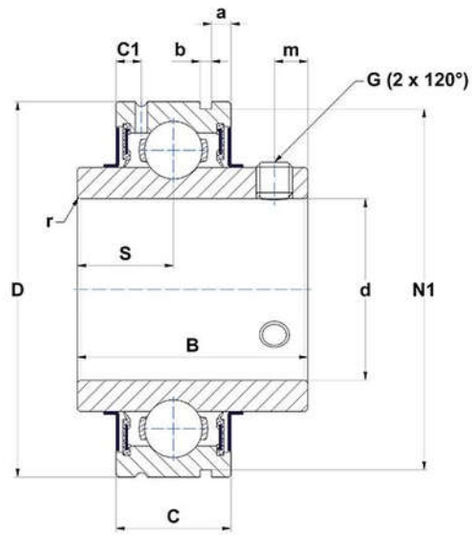

PRODUCT DEFINITION

Brand	SNR
a - Distance to grooves in OR	3,7 mm
b - Groove width in OR	2,7 mm
B - Width of Inner Ring	51,6 mm
C - Width of Outer Ring	24 mm
C1 - Distance center of OR to center of lubrication zone	5,6 mm
d - Shaft diameter	49,213 mm
D - Outer diameter of OR	90 mm

CUC210-31
Insert bearings

PRODUCT DEFINITION	
G - Set screw size	3/8-24UNF
m - Distance to set screw	9 mm
N1 - Groove dia in OR	86,79 mm
r - Radius Inner Ring	1.1
S - Distance front side/bearing centre	19 mm
f0 - Factor	14.4
SW - Wrench size	4,763 mm

PRODUCT PERFORMANCE	
C - Dynamic load rating	35100000 mN
C0 - Static load rating	23200000 mN
Operating temperature min.	253,15 °K
Operating temperature max.	373,15 °K

OTHER FEATURES	
Mass	0,82 kg
Recommended tightening torque for set screw	16.8 N-m

BEARING FREQUENCIES	
BPFO - Over rolling frequency on outer ring (60 rpm)	4.09285714285714 Hz
BPFI - Over rolling frequency on inner (60 rpm)	5.90714285714286 Hz
BSF - Over rolling frequency on rolling element (60 rpm)	5.33038245219348 Hz
BRF - Rotational frequency – rolling element (60 rpm)	2.66519122609674 Hz
FTF - Rotational frequency - cage (60 rpm)	0.409285714285714 Hz