Product data sheet
Characteristics

XS608B1DAM12
inductive sensor XS6 M8 - L62mm - stainless - Sn2.5mm - 12..48VDC - M12



Main

Range of product	OsiSense XS
Series name	General purpose
Sensor type	Inductive proximity sensor
Device application	-
Sensor name	XS6
Sensor design	Cylindrical M8
Size	62 mm
Body type	Fixed
Detector flush mounting acceptance	Flush mountable
Material	Stainless steel
Type of output signal	Discrete
Wiring technique	2-wire
[Sn] nominal sensing distance	2.5 mm
Discrete output function	1 NO
Output circuit type	DC
Electrical connection	Male connector M12, 4 pins
[Us] rated supply voltage	12...48 V DC with reverse polarity protection
Switching capacity in mA	<= 100 mA DC with overload and short-circuit protection
IP degree of protection	IP67 conforming to IEC 60529

Complementary

Thread type	M8 x 1
Detection face	Frontal
Front material	PPS
Enclosure material	Stainless steel 303
Operating zone	0…2 mm
Differential travel	1...15% of Sr

Disclaimer: This documentation is not intended as a substitute for and is not to be used for determining suitability or reliability of these products for specific user applications

Status LED	Output state: 1 LED (yellow)
Supply voltage limits	10…58 V DC
Switching frequency	<= 3000 Hz DC
Maximum voltage drop	<4 V (closed)
Maximum delay first up	10 ms
Maximum delay response	0.3 ms
Maximum delay recovery	0.3 ms
Marking	CE
Threaded length	40 mm
Length	62 mm
Net weight	0.015 kg

Environment

Product certifications	CSA UL
Ambient air temperature for operation	-25…70 °C
Ambient air temperature for storage	-40…85 °C
Vibration resistance	25 gn amplitude = +/- 2 mm (f = 10…55 Hz) conforming to IEC 60068-2-6
Shock resistance	50 gn for 11 ms conforming to IEC 60068-2-27

Offer Sustainability

Sustainable offer status	Green Premium product
REACh Regulation	REACh Declaration
EU RoHS Directive	Pro-active compliance (Product out of EU RoHS legal scope) EU RoHS Declaration
Mercury free	Yes
RoHS exemption information	Yes
Environmental Disclosure	Product Environmental Profile
Circularity Profile	End of Life Information

Contractual warranty

Warranty	18 months

XS608B1DAM12

Dimensions

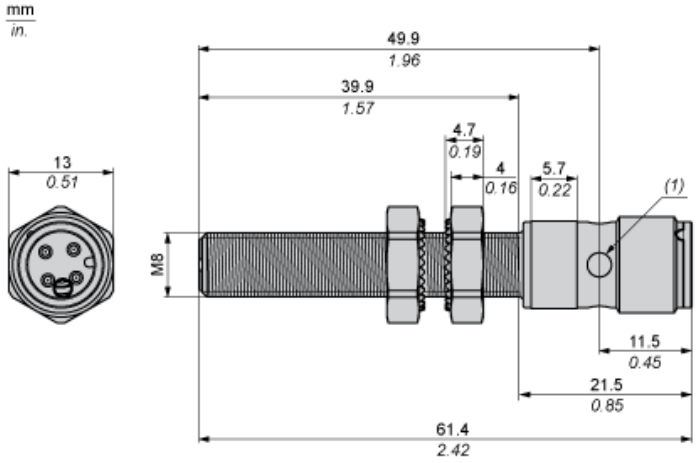

(1) LED

Minimum Mounting Distances in mm

Side by side

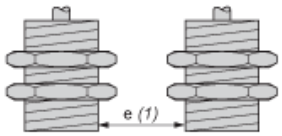

e (1) ≥ 5 mm/0.20 in.

Face to face

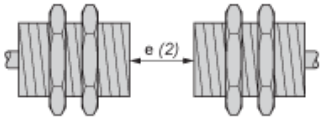

e (2) ≥ 30 mm/1.18 in.

Facing a metal object

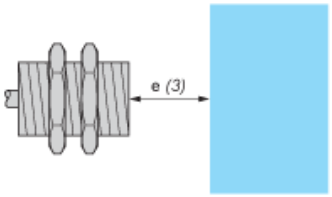

e (3) ≥ 8 mm/0.31 in.

Wiring Schemes

2-Wire Non-polarised

M12 connector



NO output

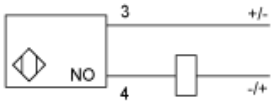

Performance Curves

Standard Steel Target (mm) : 8x8x1

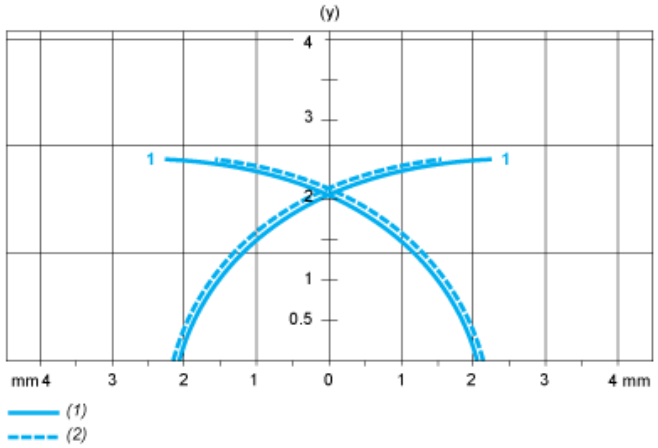

(1) Pick-up points
(2) Drop-out points (object approaching from the side)
(y) Sensing distance in mm