Bell Mounts - Type CFBMS - Type 2





Applications

- Gensets
- Engines
- Toolroom Machinery
- Special Equipment
- HVAC
- Pumps

The CFBMS range of mounts offer a high level of insulation - especially useful on Generators, Engines etc. with an operating frequency of around 25 Hz (1,500 RPM).

This particular range is designed with extra large deflection capabilities to offer excellent isolation at the lower frequencies - even down to 8Hz (500RPM), where isolation levels of circa. 80% can still be achieved.

Axial stresses are perfectly absorbed and side deflections are limited to guarantee good stability.

These Bell Mounts are designed with a fail-safe function making it an ideal solution for applications where safety is paramount.

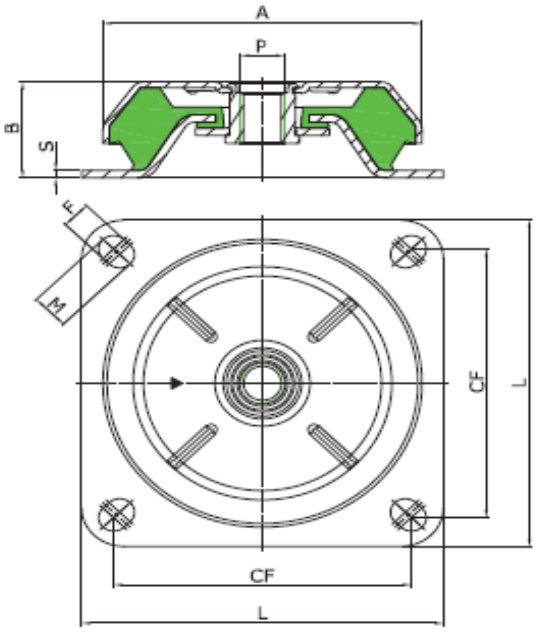

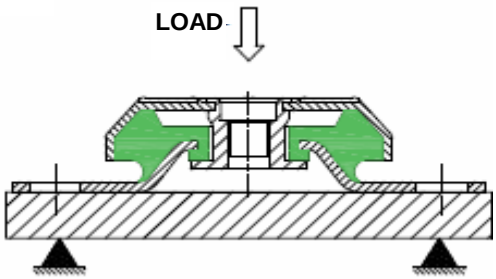

RS Ref:	Fibet Ref:	Hardness (IRHD)	A (mm)	B (mm)	P (mm)	FxM (mm)	CF (mm)	L (mm)	S (mm)	Average Stiffness (daN/mm)	Maximum Load (daN)	Maximum Deflection (mm)
T.B.A.	CFBMS1808620W	45	180	86	M20	14.5	146	190	5	59.2	900.0	15.2
T.B.A.	CFBMS1808620M	60	180	86	M20	14.5	146	190	5	127.0	1700.0	13.4
T.B.A.	CFBMS22010524W	45	220	105	M24	17.5x20	180	220	5	95.0	1700.0	17.9
T.B.A.	CFBMS22010524M	60	220	105	M24	17.5x20	180	220	5	195.0	3400.0	17.4