8B0C0160HC00.A01-1

1 General information

- Connections for the power supply of 42 V devices
- Extensive protective measures

2 Order data

Model number	Short description	Figure
	Cold plate or feed-through mounting	
8B0C0160HC00.A01-1	ACOPOSmulti auxiliary supply module, 16 A, HV, cold plate or feed-through mounting, 42VOut 1x 16 A, 1x 3 A	
	Required accessories	
	Terminal block sets	
8BZ0C016000.A01-1A	Screw clamp terminal block set for ACOPOSmulti 8B0C0160Hx00.A01-1 modules: 1x 8TB3104.201H-11, 1x 8TB2104.2010-00, 1x 8TB2106.2010-00	
	Optional accessories	
	Fan modules	
8BXF001.0000-00	ACOPOSmulti fan module, replacement fan for ACOPOSmulti modules (8BxP/8B0C/8BVI/8BVE/8B0K)	
	Terminal blocks	
8TB2104.2010-00	4-pin screw clamp, single row, spacing: 5.08 mm, label 1: numbered serially	
8TB2106.2010-00	6-pin screw clamp, single row, spacing: 5.08 mm, label 1: numbered serially	
8TB2106.2210-00	Push-in terminal block 6-pin, 1-row, spacing: 5.08 mm, label 1: numbered consecutively	
8TB3104.201H-11	4-pin screw clamp, single row, spacing: 7.62 mm, label 1: numbered serially, H keying: 1110	

Table 1: 8B0C0160HC00.A01-1 - Order data

3 Technical data

Model number	8B0C0160HC00.A01-1
General information	
Cooling and mounting type	Cold plate or feed-through mounting
Certifications	
CE	Yes
UL	cULus E225616 Power conversion equipment
EAC	Yes
KC	Yes
DC bus connection	
Voltage	
Nominal	750 VDC
Workspace	350 to 800 VDC
Continuous power consumption	Max. 880 W
Power dissipation with continuous power [1)]	25 W (0% continuous power) 36 W (50% continuous power) 70 W (100% continuous power)
DC bus capacitance	220 nF
Variant	ACOPOSmulti backplane
24 VDC internal system power supply	
Variant	ACOPOSmulti backplane
42 VDC output	
Continuous power [2)]	800 W
Output voltage	
DC bus voltage (U_{DC}): 260 to 315 VDC	0 V
DC bus voltage (U_{DC}): 315 to 800 VDC	42 VDC
Continuous current	16 ADC
Reduction of continuous power at ambient temperatures starting at 40°C	No reduction

Table 2: 8B0C0160HC00.A01-1 - Technical data

Model number	8B0C0160HC00.A01-1
Reduction of continuous power depending on installation elevation	
Starting at 500 m above sea level	80 W per 1000 m
Reduction of continuous power depending on cooling method	No reduction
Startup delay	Max. 1 s
Startup time	Approx. 5 to 20 ms
Residual ripple	Typ. 50 mV_{SS}
42 VDC Out	
Output voltage	
DC bus voltage (U_{DC}): 260 to 315 VDC	0 V
DC bus voltage (U_{DC}): 315 to 800 VDC	42 VDC ±6%
Peak current (<4 s) over total DC bus voltage operating range	21 ADC
Protection of 42 VDC Out 1 output	16 A (slow-blow) electronic, automatic reset
Protection of 42 VDC Out 2 output	3 A (slow-blow) electronic, automatic reset
Protective measures	
Open circuit protection	Yes
Overload-proof	Yes
Short-circuit proof	Yes
Feedback protection	42 VDC Out1: Max. 50 VDC (also when the power is switched off) 42 VDC Out2: Max. 50 VDC (also when the power is switched off) [3]
Overtemperature protection	Yes
Dielectric strength to ground	±96 VDC
Output/Input isolation	SELV / PELV requirements
Variant	
42 VDC, COM	Connector
Terminal connection cross section of 42 VDC Out 1 output	
Flexible and fine-stranded wires	
With wire end sleeves	0.25 to 6 mm²
Approbation data	
UL/C-UL-US	22 to 10 AWG
CSA	22 to 10 AWG
Terminal connection cross section of 42 VDC Out 2 output	
Flexible and fine-stranded wires	
With wire end sleeves	0.25 to 2.5 mm²
Approbation data	
UL/C-UL-US	22 to 12 AWG
CSA	22 to 12 AWG
42 VDC Out 1 controller input	
Circuit	Sink
Electrical isolation	
Input - 42 VDC	Yes
Modulation compared to ground potential	Max. ±50 V
Input voltage	
Nominal	24 VDC
Maximum	30 VDC
Switching threshold	
Low (42 VDC Out 1 is switched on)	<5 V
High (42 VDC Out 1 is switched off)	>15 V
Input current at nominal voltage	Approx. 10 mA
Switching delay	
ON (42 VDC Out 1 is switched on)	Max. 25 ms
OFF (42 VDC Out 1 is switched off) [4]	Max. 0.25 ms
Variant	Connector
Terminal connection cross sections	
Flexible and fine-stranded wires	
With wire end sleeves	0.25 to 2.5 mm²
Approbation data	
UL/C-UL-US	22 to 12 AWG
CSA	22 to 12 AWG
Operating conditions	
Permissible mounting orientations	
Hanging vertically	Yes
Horizontal, face up	Yes
Standing horizontally	No
Installation elevation above sea level	
Nominal	0 to 500 m
Maximum [5]	4000 m
Pollution degree per EN 61800-5-1	2 (non-conductive pollution)
Overvoltage category per EN 61800-5-1	III

Table 2: 8B0C0160HC00.A01-1 - Technical data

Model number	8B0C0160HC00.A01-1
Degree of protection per EN 60529	IP20
Ambient conditions	
Temperature	
Operation	
Nominal	5 to 40°C
Maximum	55°C
Storage	-25 to 55°C
Transport	-25 to 70°C
Relative humidity	
Operation	5 to 85%
Storage	5 to 95%
Transport	Max. 95% at 40°C
Mechanical properties	
Dimensions [6]	
Width	53 mm
Height	317 mm
Depth	
Cold plate	212 mm
Feed-through mounting	209 mm
Weight	Approx. 2.6 kg
Module width	1

Table 2: 8B0C0160HC00.A01-1 - Technical data

1) Continuous power on 42 VDC output
2) Valid under the following conditions: 750 VDC DC bus voltage, 55°C ambient temperature, installation elevation <500 m above sea level, no derating due to cooling type.
3) Revision H0 and later. The following applies up to revision G0:
   42 VDC Out1: Max. 60 VDC (also when the power is switched off)
   42 VDC Out2: Max. 60 VDC (also when the power is switched off).
4) When switching off, there is no active discharge of the output and the loads connected to it.
5) Continuous operation at an installation elevation of 500 m to 4,000 m above sea level is possible taking the specified reduction of continuous power into account. Requirements that go beyond this must be arranged with B&R.
6) These dimensions refer to the actual device dimensions including the respective mounting plate. Additional spacing above and below the devices must be taken into account for mounting, connections and air circulation.

4 Status indicators

Status indicators are located on the black cover of each module.

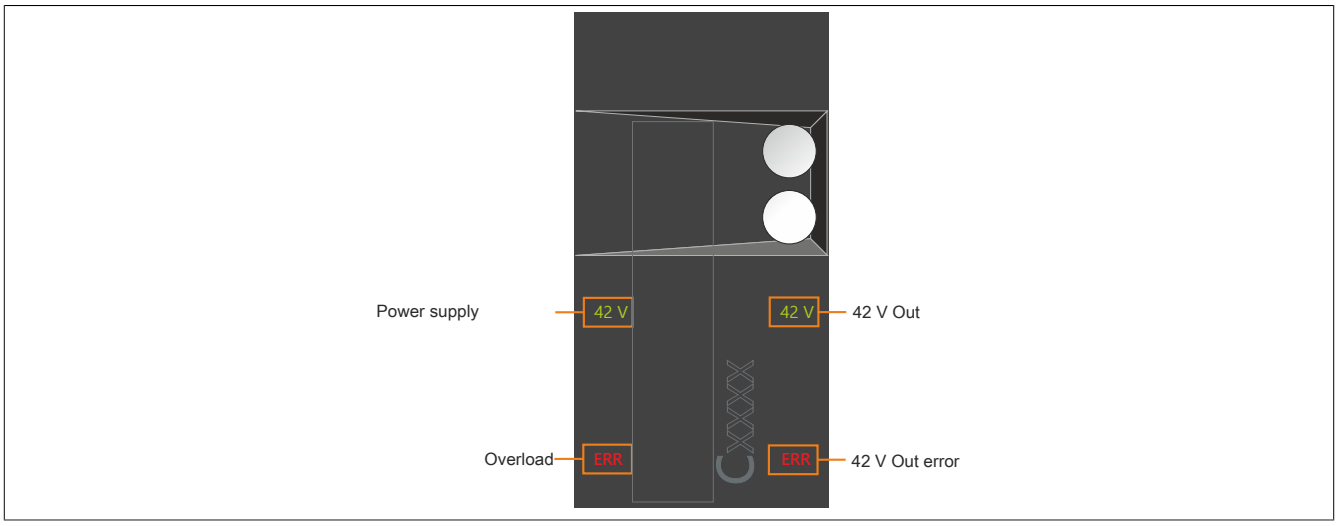

Figure 1: Auxiliary supply modules with 42 V Out (8B0C0160Hx00.A01-1) - Status indicator groups

4.1 Auxiliary supply modules with 42 V Out - LED status indicators

Status indicator group	Label	Color	Function	Description
Power supply	42 V	Green	42 V OK	42 VDC power supply is within the permissible tolerance.
Overload	ERR	Red	Overload	The module is not supplied via the DC bus. 1) The 42 VDC power supply is outside the permissible tolerance (overload, overtemperature, short circuit, etc.).
42 V Out	42 V	Green	42 V Out OK	One of the switchable 42 VDC Out outputs is enabled; the output voltage is within the permissible tolerance.
	ERR	Red	42 V Out error	The 42 VDC power supply is outside the permissible tolerance (overload, overtemperature, short circuit, etc.). At least one of the switchable outputs is enabled **and** the electronic fuse has tripped for one or more switchable outputs.

Table 3: 8B0C auxiliary supply modules with 42 V Out - LED status indicators

1) The module is enabled via input CR_OK, no electrical contact to the backplane module. Check the lower mounting screw.

5 Wiring

5.1 8B0C0160Hx00.A01-1 - Pinout overview

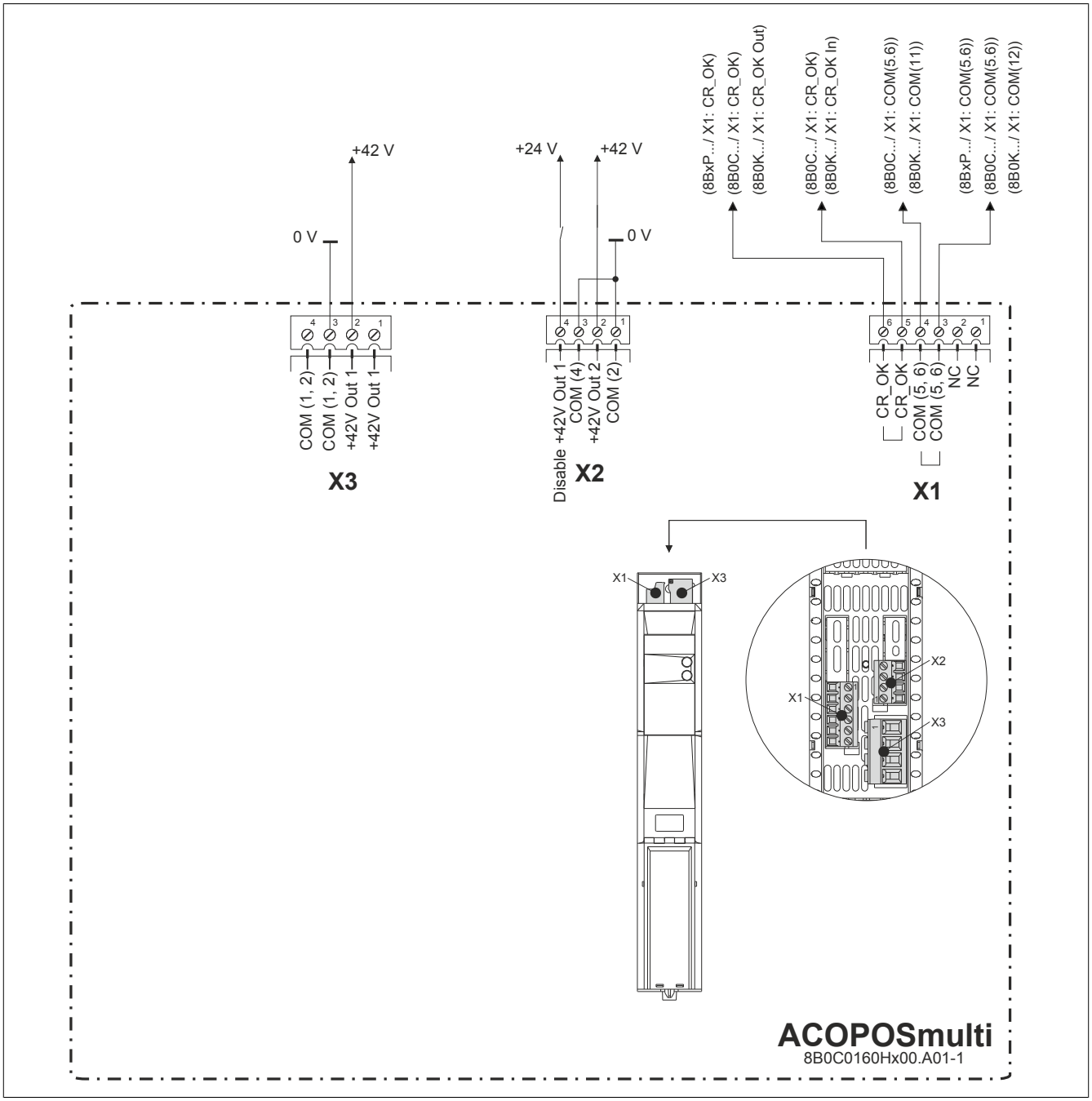

Figure 2: 8B0C0160Hx00.A01-1 - Pinout overview

5.2 Connector X1 - Pinout

X1	Pin	Description	Function
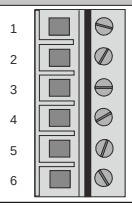	1	---	---
	2	---	---
	3	COM (5, 6)	DC bus ready 0 V
	4	COM (5, 6)	DC bus ready 0 V
	5	CR_OK	DC bus ready
	6	CR_OK	DC bus ready

Table 4: Connector X1 - Pinout

5.3 Connector X2 with 42 Out - Pinout

X2	Pin	Description	Function
	1	COM (2)	+42 V output 2 0 V
	2	+42 V Out 2	+42 V output 2
	3	COM (4)	Disable +42 V output 1 0 V
	4	Disable +42 V Out 1	Disable +42 V output 1

Table 5: Connector X2 with 42 Out - Pinout

5.4 Connector X3 - Pinout

X3	Pin	Description	Function
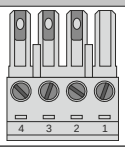	1	+42 V Out 1	+42 V output 1
	2	+42 V Out 1	+42 V output 1
	3	COM (1, 2)	+42 V output 1 0 V
	4	COM (1, 2)	+42 V output 1 0 V

Table 6: Connector X3 - Pinout

Information:

To obtain a defined reference of ground to ground potential, B&R recommends grounding the two COM connections (1, 2) on connector X3. Alternatively, grounding of connection COM (2) on connector X2 is also possible.

5.5 - Input/Output circuit diagram

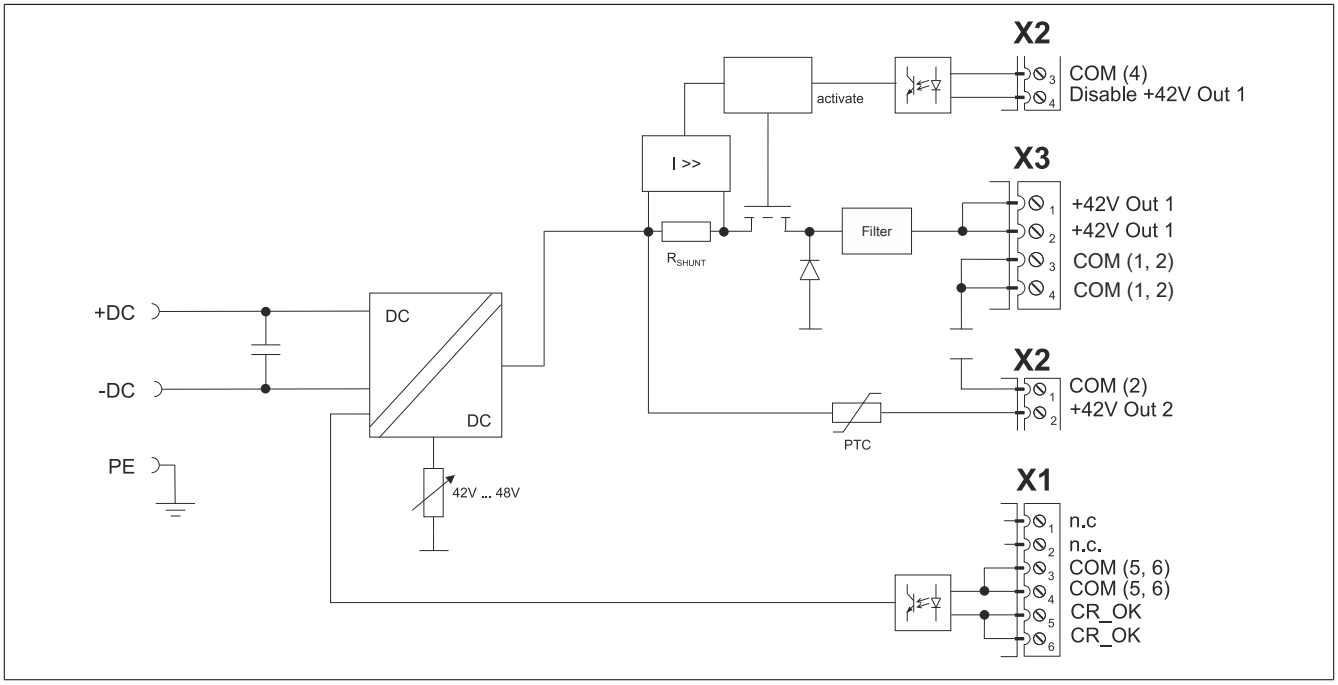

Figure 3: 8B0C0160Hx00.A01-1 - Input/Output circuit diagram

5.6 Parallel connection of multiple 8B0C auxiliary supply modules

Warning!

When connecting external 42 V outputs (42 V Out 1, 42 V Out 2) in parallel, the corresponding COM connections must also be connected in parallel!