EBC116

Y-splitter

ZDO2H050MSS0000-00STGH050MSS

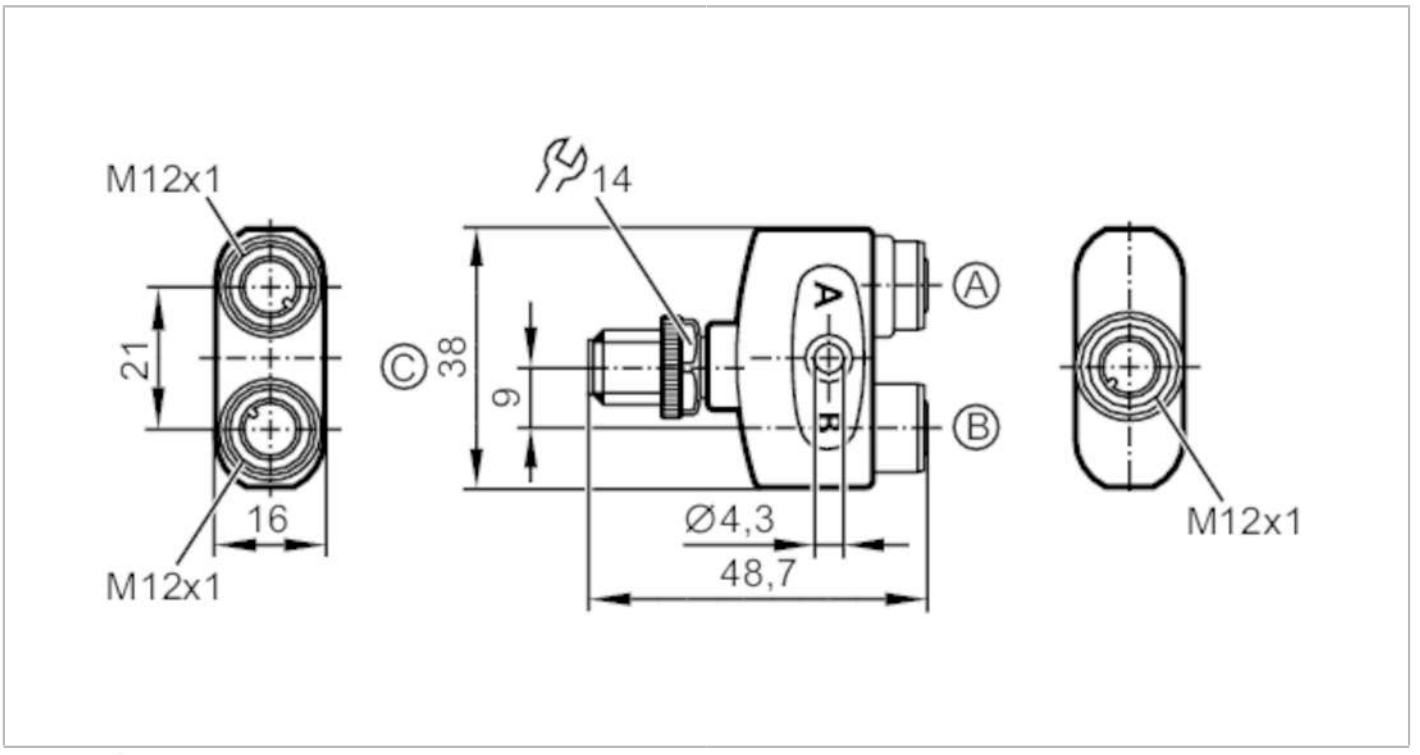

Application		
Application		logic OR function
Free from silicone		yes
Electrical data		
Operating voltage	[V]	< 60 AC/DC; (cULus: 30 AC / 42 DC)
Protection class		II
Max. current load per module/slot	[A]	4
Max. current load total	[A]	4; (cULus: 3)
Operating conditions		
Ambient temperature	[°C]	-25...90
Note on ambient temperature		cULus: ...65 °C
Protection		IP 65; IP 67; IP 68; IP 69K
Mechanical data		
Weight	[g]	36.8
Materials		housing: PA orange; Sealing: FKM
Material nut		brass / brass
Remarks		
Pack quantity		1 pcs.
Electrical connection - socket		

Connector: 2 x M12; Locking: , brass, nickel-plated; Kontakte: gold-plated; Tightening torque: 0.6...1.5

EBC116

Y-splitter

ZDO2H050MSS0000-00STGH050MSS



Electrical connection - plug

Connector: 1 x M12; Locking: , brass, nickel-plated; Kontakte: gold-plated; Tightening torque: 0.6...1.5

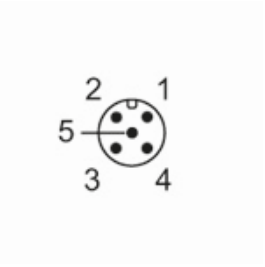

Connection

