EY1003

Corner mirror for safety light grids

DEFLECTION MIRROR 540 LENGTH

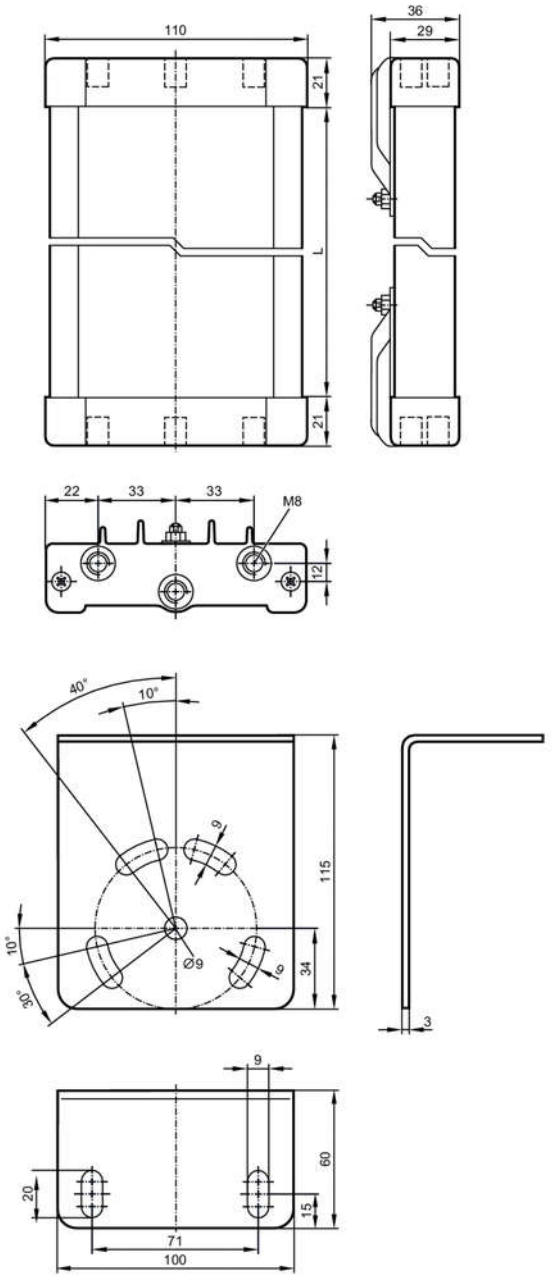

Operating conditions		
Ambient temperature	[°C]	-10...55
Mechanical data		
Weight	[g]	3295
Dimensions	[mm]	582 x 110 x 36
Materials		aluminium epoxy-powder coated; plastics; Accessories: steel galvanised
Length	[mm]	540
Accessories		
Items supplied		screws: 4 x M8
		hexagon nuts: 4 x M8
		washers: 4

EY1003

Corner mirror for safety light grids

DEFLECTION MIRROR 540 LENGTH

Remarks	
Pack quantity	1 pcs.