Current Transducer HLSR-P series

I_{PN} = 10 ... 50 A

Ref: HLSR 10-P, HLSR 16-P, HLSR 20-P, HLSR 32-P, HLSR 40-P, HLSR 50-P

For the electronic measurement of current: DC, AC, pulsed..., with galvanic separation between the primary and the secondary circuit.

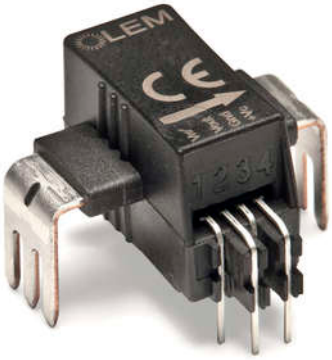

Features

- Open loop multi-range current transducer
- Voltage output
- Single supply +5 V
- Galvanic separation between primary and secondary
- Low power consumption
- Compact design for through-hole PCB mounting
- Factory calibrated
- High bandwidth, very low loss magnetic core.

Advantages

- Extremely low profile: h = 12 mm
- Low foot-print
- Low offset drift
- Over-drivable V_{ref}.

Applications

- AC variable speed and servo motor drives
- Static converters for DC motor drives
- Battery supplied applications
- Uninterruptible Power Supplies (UPS)
- Switched Mode Power Supplies (SMPS)
- Power supplies for welding applications
- Combiner box
- MPPT.

Standards

- EN 50178: 1997
- IEC 61010-1: 2010
- IEC 61326-1: 2012
- UL 508: 2010.

Application Domain

- Industrial.

LEM reserves the right to carry out modifications on its transducers, in order to improve them, without prior notice

Absolute maximum ratings

Parameter	Symbol	Unit	Value
Supply voltage (not destructive)	U_C	V	8
Supply voltage (not entering non standard modes)	U_C	V	6.5
Primary conductor temperature	T_B	°C	120
Electrostatic discharge voltage (HBM - Human Body Model)	$U_{ESD\ HBM}$	kV	2

Stresses above these ratings may cause permanent damage. Exposure to absolute maximum ratings for extended periods may degrade reliability.

UL 508: Ratings and assumptions of certification

File # E189713 Volume: 2 Section: 5

Standards

- CSA C22.2 NO. 14-10 INDUSTRIAL CONTROL EQUIPMENT - Edition 11 - Revision Date 2011/08/01
- UL 508 STANDARD FOR INDUSTRIAL CONTROL EQUIPMENT - Edition 17 - Revision Date 2010/04/15

Ratings

Parameter	Symbol	Unit	Value
Primary involved potential		V AC/DC	600
Ambient operating temperature	T_A	°C	105
Primary current	I_P	A	According to series primary current
Secondary supply voltage	U_C	V DC	5
Output voltage	V_{out}	V	0 to 5

Conditions of acceptability

1 - These devices have been evaluated for overvoltage category III and for use in pollution degree 2 environment.

2 - A suitable enclosure shall be provided in the end-use application.

3 - The terminals have not been evaluated for field wiring.

4 - These devices are intended to be mounted on a printed wiring board of end use equipment. The suitability of the connections (including spacings) shall be determined in the end-use application.

5 - Primary terminals shall not be straightened since assembly of housing case depends upon bending of the terminals.

6 - Any surface of polymeric housing have not been evaluated as insulating barrier.

7 - Low voltage control circuit shall be supplied by an isolating source (such as a transformer, optical isolator, limiting impedance or electro-mechanical relay).

Marking

Only those products bearing the UR Mark should be considered to be Listed or Recognized and covered under UL's Follow-Up Service. Always look for the Mark on the product.

LEM reserves the right to carry out modifications on its transducers, in order to improve them, without prior notice

Insulation coordination

Parameter	Symbol	Unit	Value	Comment
RMS voltage for AC insulation test, 50/60 Hz, 1 min	U_d	kV	4.3	
Impulse withstand voltage 1.2/50 µs	$\hat{U}_W$	kV	8	
Clearance (pri. - sec.)	d_{Cl}	mm	> 8	Shortest distance through air
Creepage distance (pri. - sec.)	d_{Cp}	mm	> 8	Shortest path along device body
Clearance (pri. - sec.)	d_{Cl}	mm	8	When mounted on PCB with recommended layout
Case material	-	-	V0	According to UL 94
Comparative tracking index	CTI	-	600	
Application example	-	V	600	Reinforced insulation, CAT III, PD 2, non uniform field according to EN 50178, IEC 61010
Application example	-	V	1000	Basic insulation, CAT III, PD 2, non uniform field according to EN 50178, IEC 61010
Application example	-	V	1500	Basic insulation, CAT III, PD 2, according to IEC 62109-1 Altitude ≤ 3000 m
Application example	-	V	600	CAT III, PD 2, according to UL 508

Environmental and mechanical characteristics

Parameter	Symbol	Unit	Min	Typ	Max	Comment
Ambient operating temperature	T_A	°C	−40		105	
Ambient storage temperature	T_S	°C	−40		105	
Mass	m	g			5	

LEM reserves the right to carry out modifications on its transducers, in order to improve them, without prior notice

Electrical data HLSR 10-P

At T_A = 25 °C, U_C = +5, R_L = 10 kΩ unless otherwise noted (see Min, Max, typ. definition paragraph in page 10).

Parameter	Symbol	Unit	Min	Typ	Max	Comment
Primary nominal RMS current	I_{PN}	A		10		
Primary current, measuring range	I_{PM}	A	−25		25	For U_C > 4.6 V
Number of primary turns	N_P			1		
Resistance of primary jumper @ T_A = 25 °C	R_P	mΩ		0.21		
Resistance of primary jumper @ T_A = 105 °C	R_P	mΩ		0.29		T jumper = 120 °C
Supply voltage [1]	U_C	V	4.5	5	5.5	
Current consumption	I_C	mA		19	25	
Reference voltage (output)	V_{ref}	V	2.48	2.5	2.52	Internal reference
Reference voltage (input)	V_{ref}	V	0.5		2.65	External reference
Output voltage range @ I_{PM}	$V_{out} - V_{ref}$	V	−2		2	Over operating temperature range
V_{ref} output resistance	R_{ref}	Ω	130	200	300	series
V_{out} output resistance	R_{out}	Ω		2	5	series
Capacitive loading	C_L	nF	0		6	
Electrical offset voltage @ I_P = 0	V_{OE}	mV	−5		5	$V_{out} - V_{ref}$ @ V_{ref} = 2.5 V
Electrical offset current, referred to primary	I_{OE}	mA	−62.5		62.5	
Temperature coefficient of V_{ref}	TCV_{ref}	ppm/K	−170		170	−40 °C … 105 °C
Temperature coefficient of V_{OE}	TCV_{OE}	mV/K	−0.075		0.075	−40 °C … 105 °C
Temperature coefficient of I_{OE}	TCI_{OE}	mA/K	−0.94		0.94	−40 °C … 105 °C
Theoretical sensitivity	G_{th}	mV/A		80		800 mV @ I_{PN}
Sensitivity error	ε_G	%	−0.5		0.5	Factory adjustment
Temperature coefficient of G	TCG	ppm/K	−200		200	−40 °C … 105 °C
Linearity error 0 ... I_{PN}	ε_L	% of I_{PN}	−0.5		0.5	
Linearity error 0 ... I_{PM}	ε_L	% of I_{PM}	−0.5		0.5	
Magnetic offset current (@ 10 × I_{PN}) referred to primary	I_{OM}	A	−0.25		0.25	
Output RMS noise voltage spectral density 100 Hz… 100 kHz	e_{no}	µV/√Hz			28	
Output RMS noise voltage DC … 10 kHz DC … 100 kHz DC … 1 MHz	V_{no}	mVpp		 17.5 46.1 65.7		
Reaction time @ 10 % of I_{PN}	t_{ra}	µs			2	@ 50 A/µs
Step response time to 90 % of I_{PN}	t_r	µs			2.5	@ 50 A/µs
Frequency bandwidth (−3 dB)	BW	kHz		400		
Accuracy @ I_{PN}	X	% of I_{PN}	−1		1	
Accuracy @ I_{PN} @ T_A = +85 °C	X	% of I_{PN}	−2.9		2.9	See formula note [2]
Accuracy @ I_{PN} @ T_A = +105 °C	X	% of I_{PN}	−3.4		3.4	See formula note [2]

Notes: [1] 3.3 V SP version available

[2] Accuracy @ T_A (% of I_{PN}) = $X + \left(\frac{TCG}{10000} \times (T_A - 25) + \frac{TCI_{OE}}{1000 \times I_{PN}} \times 100 \times (T_A - 25)\right)$.

Electrical data HLSR 16-P

At T_A = 25 °C, U_C = +5, R_L = 10 kΩ unless otherwise noted (see Min, Max, typ. definition paragraph in page 10).

Parameter	Symbol	Unit	Min	Typ	Max	Comment
Primary nominal RMS current	I_{PN}	A		16		
Primary current, measuring range	I_{PM}	A	−40		40	For U_C > 4.6 V
Number of primary turns	N_P			1		
Resistance of primary jumper @ T_A = 25 °C	R_P	mΩ		0.21		
Resistance of primary jumper @ T_A = 105 °C	R_P	mΩ		0.29		T jumper = 120 °C
Supply voltage [1)]	U_C	V	4.5	5	5.5	
Current consumption	I_C	mA		19	25	
Reference voltage (output)	V_{ref}	V	2.48	2.5	2.52	Internal reference
Reference voltage (input)	V_{ref}	V	0.5		2.65	External reference
Output voltage range @ I_{PM}	$V_{out} - V_{ref}$	V	−2		2	Over operating temperature range
V_{ref} output resistance	R_{ref}	Ω	130	200	300	series
V_{out} output resistance	R_{out}	Ω		2	5	series
Capacitive loading	C_L	nF	0		6	
Electrical offset voltage @ I_P = 0	V_{OE}	mV	−5		5	$V_{out} - V_{ref}$ @ V_{ref} = 2.5 V
Electrical offset current, referred to primary	I_{OE}	mA	−100		100	
Temperature coefficient of V_{ref}	TCV_{ref}	ppm/K	−170		170	−40 °C … 105 °C
Temperature coefficient of V_{OE}	TCV_{OE}	mV/K	−0.075		0.075	−40 °C … 105 °C
Temperature coefficient of I_{OE}	TCI_{OE}	mA/K	−1.5		1.5	−40 °C … 105 °C
Theoretical sensitivity	G_{th}	mV/A		50		800 mV @ I_{PN}
Sensitivity error	ε_G	%	−0.5		0.5	Factory adjustment
Temperature coefficient of G	TCG	ppm/K	−200		200	−40 °C … 105 °C
Linearity error 0 ... I_{PN}	ε_L	% of I_{PN}	−0.5		0.5	
Linearity error 0 ... I_{PM}	ε_L	% of I_{PM}	−0.5		0.5	
Magnetic offset current (@ 10 × I_{PN}) referred to primary	I_{OM}	A	−0.25		0.25	
Output RMS noise voltage spectral density 100 Hz … 100 kHz	e_{no}	μV/√Hz			28	
Output RMS noise voltage DC … 10 kHz DC … 100 kHz DC … 1 MHz	V_{no}	mVpp		 11.3 28.6 41.2		
Reaction time @ 10 % of I_{PN}	t_{ra}	μs			2	@ 50 A/μs
Step response time to 90 % of I_{PN}	t_r	μs			2.5	@ 50 A/μs
Frequency bandwidth (−3 dB)	BW	kHz		400		
Accuracy @ I_{PN}	X	% of I_{PN}	−1		1	
Accuracy @ I_{PN} @ T_A = +85 °C	X	% of I_{PN}	−2.9		2.9	See formula note [2)]
Accuracy @ I_{PN} @ T_A = +105 °C	X	% of I_{PN}	−3.4		3.4	See formula note [2)]

Notes: [1)] 3.3 V SP version available

[2)] Accuracy @ T_A (% of I_{PN}) = $X + \left(\frac{TCG}{10000} \times (T_A - 25) + \frac{TCI_{OE}}{1000 \times I_{PN}} \times 100 \times (T_A - 25)\right)$.

Electrical data HLSR 20-P

At T_A = 25 °C, U_C = +5, R_L = 10 kΩ unless otherwise noted (see Min, Max, typ. definition paragraph in page 10).

Parameter	Symbol	Unit	Min	Typ	Max	Comment
Primary nominal RMS current	I_{PN}	A		20		
Primary current, measuring range	I_{PM}	A	−50		50	For U_C > 4.6 V
Number of primary turns	N_P			1		
Resistance of primary jumper @ T_A = 25 °C	R_P	mΩ		0.21		
Resistance of primary jumper @ T_A = 105 °C	R_P	mΩ		0.29		T jumper = 120 °C
Supply voltage [1]	U_C	V	4.5	5	5.5	
Current consumption	I_C	mA		19	25	
Reference voltage (output)	V_{ref}	V	2.48	2.5	2.52	Internal reference
Reference voltage (input)	V_{ref}	V	0.5		2.65	External reference
Output voltage range @ I_{PM}	$V_{out} - V_{ref}$	V	−2		2	Over operating temperature range
V_{ref} output resistance	R_{ref}	Ω	130	200	300	series
V_{out} output resistance	R_{out}	Ω		2	5	series
Capacitive loading	C_L	nF	0		6	
Electrical offset voltage @ I_P = 0	V_{OE}	mV	−5		5	$V_{out} - V_{ref}$ @ V_{ref} = 2.5 V
Electrical offset current, referred to primary	I_{OE}	mA	−125		125	
Temperature coefficient of V_{ref}	TCV_{ref}	ppm/K	−170		170	−40 °C … 105 °C
Temperature coefficient of V_{OE}	TCV_{OE}	mV/K	−0.075		0.075	−40 °C … 105 °C
Temperature coefficient of I_{OE}	TCI_{OE}	mA/K	−1.88		1.88	−40 °C … 105 °C
Theoretical sensitivity	G_{th}	mV/A		40		800 mV @ I_{PN}
Sensitivity error	ε_G	%	−0.5		0.5	Factory adjustment
Temperature coefficient of G	TCG	ppm/K	−200		200	−40 °C … 105 °C
Linearity error 0 ... I_{PN}	ε_L	% of I_{PN}	−0.5		0.5	
Linearity error 0 ... I_{PM}	ε_L	% of I_{PM}	−0.5		0.5	
Magnetic offset current (@ 10 × I_{PN}) referred to primary	I_{OM}	A	−0.25		0.25	
Output RMS noise voltage spectral density 100 Hz … 100 kHz	e_{no}	μV/√Hz			14	
Output RMS noise voltage DC … 10 kHz DC … 100 kHz DC … 1 MHz	V_{no}	mVpp		 9.2 22.8 33		
Reaction time @ 10 % of I_{PN}	t_{ra}	μs			2	@ 50 A/μs
Step response time to 90 % of I_{PN}	t_r	μs			2.5	@ 50 A/μs
Frequency bandwidth (−3 dB)	BW	kHz		400		
Accuracy @ I_{PN}	X	% of I_{PN}	−1		1	
Accuracy @ I_{PN} @ T_A = +85 °C	X	% of I_{PN}	−2.9		2.9	See formula note [2]
Accuracy @ I_{PN} @ T_A = +105 °C	X	% of I_{PN}	−3.4		3.4	See formula note [2]

Notes: [1] 3.3 V SP version available

[2] Accuracy @ T_A (% of I_{PN}) = $X + \left(\frac{TCG}{10000} \times (T_A - 25) + \frac{TCI_{OE}}{1000 \times I_{PN}} \times 100 \times (T_A - 25)\right)$.

Electrical data HLSR 32-P

At T_A = 25 °C, U_C = +5, R_L = 10 kΩ unless otherwise noted (see Min, Max, typ. definition paragraph in page 10).

Parameter	Symbol	Unit	Min	Typ	Max	Comment
Primary nominal RMS current	I_{PN}	A		32		
Primary current, measuring range	I_{PM}	A	−80		80	For U_C > 4.6 V
Number of primary turns	N_P			1		
Resistance of primary jumper @ T_A = 25 °C	R_P	mΩ		0.21		
Resistance of primary jumper @ T_A = 105 °C	R_P	mΩ		0.29		T jumper = 120 °C
Supply voltage [1]	U_C	V	4.5	5	5.5	
Current consumption	I_C	mA		19	25	
Reference voltage (output)	V_{ref}	V	2.48	2.5	2.52	Internal reference
Reference voltage (input)	V_{ref}	V	0.5		2.65	External reference
Output voltage range @ I_{PM}	$V_{out} - V_{ref}$	V	−2		2	Over operating temperature range
V_{ref} output resistance	R_{ref}	Ω	130	200	300	series
V_{out} output resistance	R_{out}	Ω		2	5	series
Capacitive loading	C_L	nF	0		6	
Electrical offset voltage @ I_P = 0	V_{OE}	mV	−5		5	$V_{out} - V_{ref}$ @ V_{ref} = 2.5 V
Electrical offset current, referred to primary	I_{OE}	mA	−200		200	
Temperature coefficient of V_{ref}	TCV_{ref}	ppm/K	−170		170	−40 °C … 105 °C
Temperature coefficient of V_{OE}	TCV_{OE}	mV/K	−0.075		0.075	−40 °C … 105 °C
Temperature coefficient of I_{OE}	TCI_{OE}	mA/K	−3		3	−40 °C … 105 °C
Theoretical sensitivity	G_{th}	mV/A		25		800 mV @ I_{PN}
Sensitivity error	ε_G	%	−0.5		0.5	Factory adjustment
Temperature coefficient of G	TCG	ppm/K	−200		200	−40 °C … 105 °C
Linearity error 0 ... I_{PN}	ε_L	% of I_{PN}	−0.5		0.5	
Linearity error 0 ... I_{PM}	ε_L	% of I_{PM}	−0.5		0.5	
Magnetic offset current (@ 10 × I_{PN}) referred to primary	I_{OM}	A	−0.25		0.25	
Output RMS noise voltage spectral density 100 Hz … 100 kHz	e_{no}	μV/√Hz			8.75	
Output RMS noise voltage DC … 10 kHz DC … 100 kHz DC … 1 MHz	V_{no}	mVpp		6.2 14 20.7		
Reaction time @ 10 % of I_{PN}	t_{ra}	μs			2	@ 50 A/μs
Step response time to 90 % of I_{PN}	t_r	μs			2.5	@ 50 A/μs
Frequency bandwidth (−3 dB)	BW	kHz		400		
Accuracy @ I_{PN}	X	% of I_{PN}	−1		1	
Accuracy @ I_{PN} @ T_A = +85 °C	X	% of I_{PN}	−2.9		2.9	See formula note [2]
Accuracy @ I_{PN} @ T_A = +105 °C	X	% of I_{PN}	−3.4		3.4	See formula note [2]

Notes: [1] 3.3 V SP version available

[2] Accuracy @ T_A (% of I_{PN}) = $X + \left(\frac{TCG}{10000} \times (T_A - 25) + \frac{TCI_{OE}}{1000 \times I_{PN}} \times 100 \times (T_A - 25)\right)$.

Electrical data HLSR 40-P

At T_A = 25 °C, U_C = +5, R_L = 10 kΩ unless otherwise noted (see Min, Max, typ. definition paragraph in page 10).

Parameter	Symbol	Unit	Min	Typ	Max	Comment
Primary nominal RMS current	I_{PN}	A		40		
Primary current, measuring range	I_{PM}	A	−100		100	For U_C > 4.6 V
Number of primary turns	N_P			1		
Resistance of primary jumper @ T_A = 25 °C	R_P	mΩ		0.21		
Resistance of primary jumper @ T_A = 105 °C	R_P	mΩ		0.29		T jumper = 120 °C
Supply voltage [1]	U_C	V	4.5	5	5.5	
Current consumption	I_C	mA		19	25	
Reference voltage (output)	V_{ref}	V	2.48	2.5	2.52	Internal reference
Reference voltage (input)	V_{ref}	V	0.5		2.65	External reference
Output voltage range @ I_{PM}	$V_{out} - V_{ref}$	V	−2		2	Over operating temperature range
V_{ref} output resistance	R_{ref}	Ω	130	200	300	series
V_{out} output resistance	R_{out}	Ω		2	5	series
Capacitive loading	C_L	nF	0		6	
Electrical offset voltage @ I_P = 0	V_{OE}	mV	−5		5	$V_{out} - V_{ref}$ @ V_{ref} = 2.5 V
Electrical offset current, referred to primary	I_{OE}	mA	−250		250	
Temperature coefficient of V_{ref}	TCV_{ref}	ppm/K	−170		170	−40 °C … 105 °C
Temperature coefficient of V_{OE}	TCV_{OE}	mV/K	−0.075		0.075	−40 °C … 105 °C
Temperature coefficient of I_{OE}	TCI_{OE}	mA/K	−3.75		3.75	−40 °C … 105 °C
Theoretical sensitivity	G_{th}	mV/A		20		800 mV @ I_{PN}
Sensitivity error	ε_G	%	−0.5		0.5	Factory adjustment
Temperature coefficient of G	TCG	ppm/K	−200		200	−40 °C … 105 °C
Linearity error 0 ... I_{PN}	ε_L	% of I_{PN}	−0.5		0.5	
Linearity error 0 ... I_{PM}	ε_L	% of I_{PM}	−0.5		0.5	
Magnetic offset current (@ 10 × I_{PN}) referred to primary	I_{OM}	A	−0.25		0.25	
Output RMS noise voltage spectral density 100 Hz … 100 kHz	e_{no}	μV/√Hz			7	
Output RMS noise voltage DC … 10 kHz DC … 100 kHz DC … 1 MHz	V_{no}	mVpp		 5.1 11.1 16.6		
Reaction time @ 10 % of I_{PN}	t_{ra}	μs			2	@ 50 A/μs
Step response time to 90 % of I_{PN}	t_r	μs			2.5	@ 50 A/μs
Frequency bandwidth (−3 dB)	BW	kHz		400		
Accuracy @ I_{PN}	X	% of I_{PN}	−1		1	
Accuracy @ I_{PN} @ T_A = +85 °C	X	% of I_{PN}	−2.9		2.9	See formula note [2]
Accuracy @ I_{PN} @ T_A = +105 °C	X	% of I_{PN}	−3.4		3.4	See formula note [2]

Notes: [1] 3.3 V SP version available

[2] Accuracy @ T_A (% of I_{PN}) = $X + \left(\frac{TCG}{10000} \times (T_A - 25) + \frac{TCI_{OE}}{1000 \times I_{PN}} \times 100 \times (T_A - 25)\right)$.

LEM reserves the right to carry out modifications on its transducers, in order to improve them, without prior notice

Electrical data HLSR 50-P

At T_A = 25 °C, U_C = +5, R_L = 10 kΩ unless otherwise noted (see Min, Max, typ. definition paragraph in page 10).

Parameter	Symbol	Unit	Min	Typ	Max	Comment
Primary nominal RMS current	I_{PN}	A		50		
Primary current, measuring range	I_{PM}	A	−125		125	For U_C > 4.6 V
Number of primary turns	N_P			1		
Resistance of primary jumper @ T_A = 25 °C	R_P	mΩ		0.21		
Resistance of primary jumper @ T_A = 105 °C	R_P	mΩ		0.29		T jumper = 120 °C
Supply voltage [1]	U_C	V	4.5	5	5.5	
Current consumption	I_C	mA		19	25	
Reference voltage (output)	V_{ref}	V	2.48	2.5	2.52	Internal reference
Reference voltage (input)	V_{ref}	V	0.5		2.65	External reference
Output voltage range @ I_{PM}	$V_{out} - V_{ref}$	V	−2		2	Over operating temperature range
V_{ref} output resistance	R_{ref}	Ω	130	200	300	series
V_{out} output resistance	R_{out}	Ω		2	5	series
Capacitive loading	C_L	nF	0		6	
Electrical offset voltage @ I_P = 0	V_{OE}	mV	−5		5	$V_{out} - V_{ref}$ @ V_{ref} = 2.5 V
Electrical offset current, referred to primary	I_{OE}	mA	−313		313	
Temperature coefficient of V_{ref}	TCV_{ref}	ppm/K	−170		170	−40 °C … 105 °C
Temperature coefficient of V_{OE}	TCV_{OE}	mV/K	−0.05		0.05	−40 °C … 105 °C
Temperature coefficient of I_{OE}	TCI_{OE}	mA/K	−3.125		3.125	−40 °C … 105 °C
Theoretical sensitivity	G_{th}	mV/A		16		800 mV @ I_{PN}
Sensitivity error	ε_G	%	−0.5		0.5	Factory adjustment
Temperature coefficient of G	TCG	ppm/K	−200		200	−40 °C … 105 °C
Linearity error 0 ... I_{PN}	ε_L	% of I_{PN}	−0.5		0.5	
Linearity error 0 ... I_{PM}	ε_L	% of I_{PM}	−0.5		0.5	
Magnetic offset current (@ 10 × I_{PN}) referred to primary	I_{OM}	A	−0.25		0.25	
Output RMS noise voltage spectral density 100 Hz … 100 kHz	e_{no}	µV/√Hz			5.6	
Output RMS noise voltage DC … 10 kHz DC … 100 kHz DC … 1 MHz	V_{no}	mVpp		 4.3 8.8 13.3		
Reaction time @ 10 % of I_{PN}	t_{ra}	µs			2	@ 50 A/µs
Step response time to 90 % of I_{PN}	t_r	µs			2.5	@ 50 A/µs
Frequency bandwidth (−3 dB)	BW	kHz		400		
Accuracy @ I_{PN}	X	% of I_{PN}	−1		1	
Accuracy @ I_{PN} @ T_A = +85 °C	X	% of I_{PN}	−2.7		2.7	See formula note [2]
Accuracy @ I_{PN} @ T_A = +105 °C	X	% of I_{PN}	−3.1		3.1	See formula note [2]

Notes: [1] 3.3 V SP version available

[2] Accuracy @ T_A (% of I_{PN}) = $X + \left(\frac{TCG}{10000} \times (T_A - 25) + \frac{TCI_{OE}}{1000 \times I_{PN}} \times 100 \times (T_A - 25)\right)$.

Maximum continuous DC current

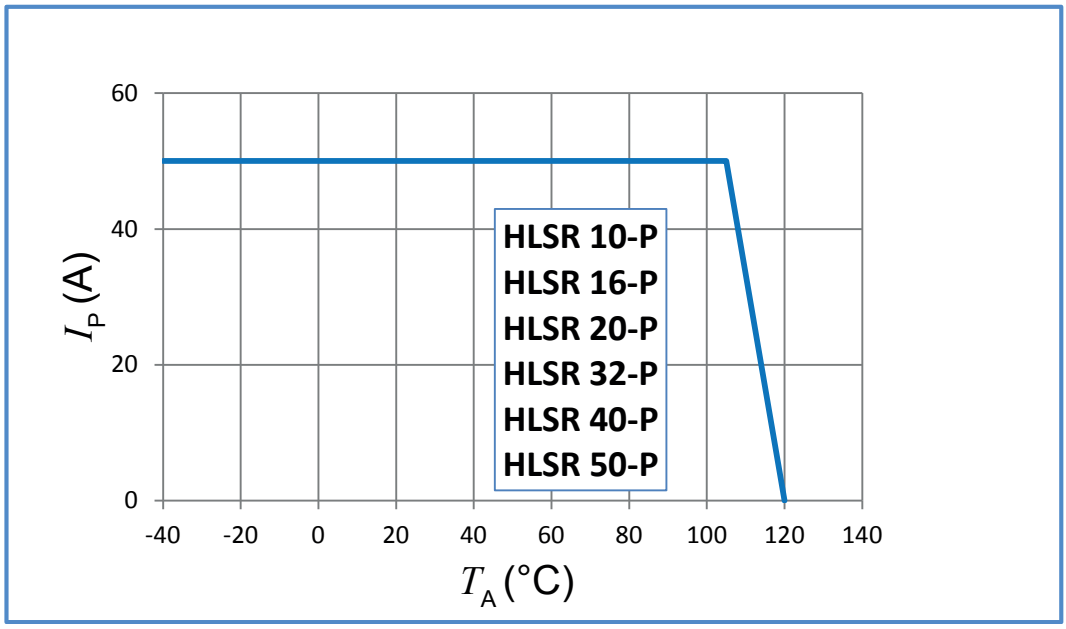

Important notice: whatever the usage and/or application, the transducer jumper temperature shall not go above the maximum ratings of 120 °C as stated in page 2 of this datasheet.

Definition of typical, minimum and maximum values

Minimum and maximum values for specified limiting and safety conditions have to be understood as such as well as values shown in “typical” graphs.
On the other hand, measured values are part of a statistical distribution that can be specified by an interval with upper and lower limits and a probability for measured values to lie within this interval.
Unless otherwise stated (e.g. “100 % tested”), the LEM definition for such intervals designated with “min” and “max” is that the probability for values of samples to lie in this interval is 99.73 %.
For a normal (Gaussian) distribution, this corresponds to an interval between −3 sigma and +3 sigma. If “typical” values are not obviously mean or average values, those values are defined to delimit intervals with a probability of 68.27 %, corresponding to an interval between −sigma and +sigma for a normal distribution.
Typical, maximal and minimal values are determined during the initial characterization of the product.

Measuring range versus external reference voltage

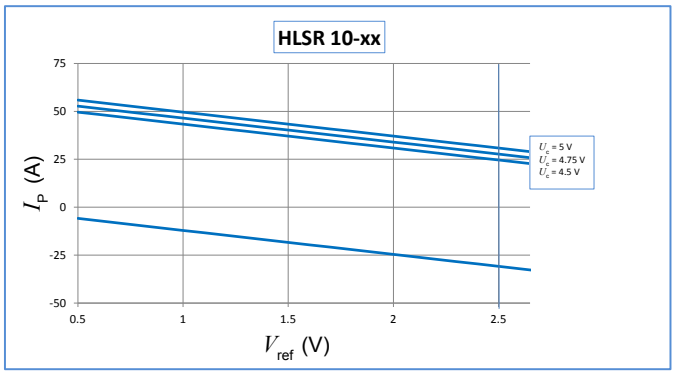

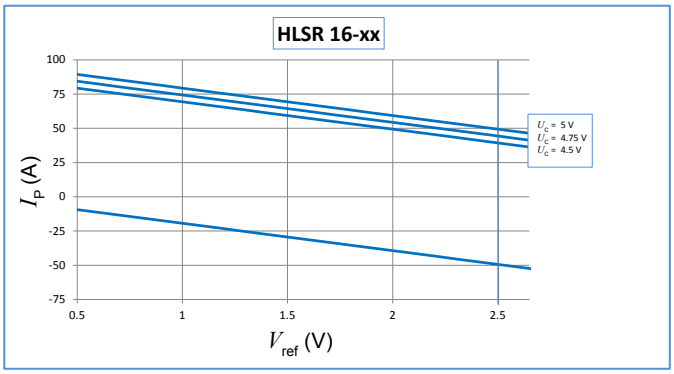

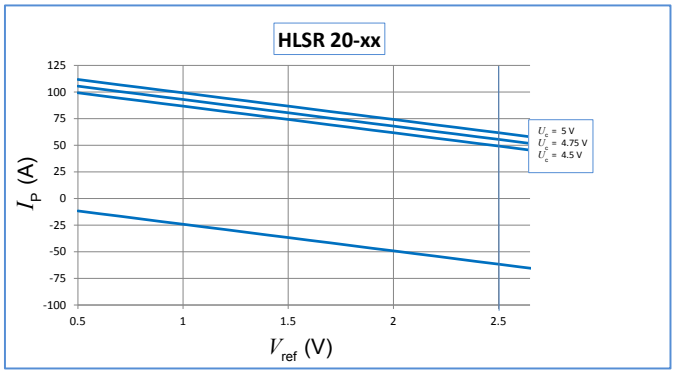

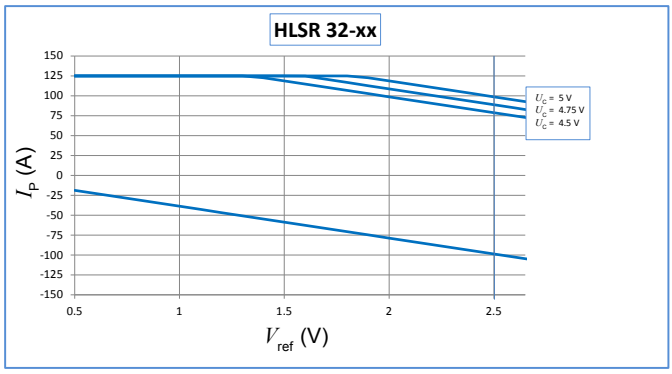

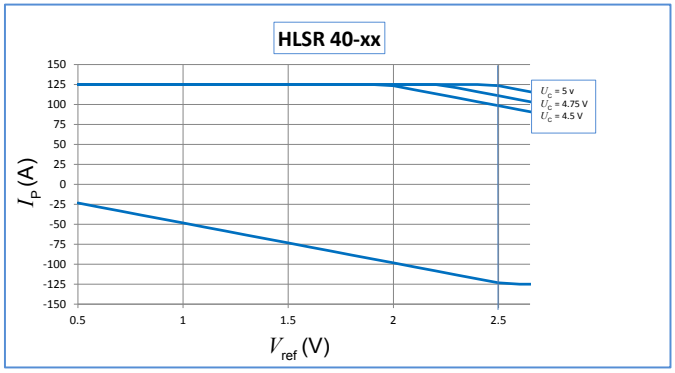

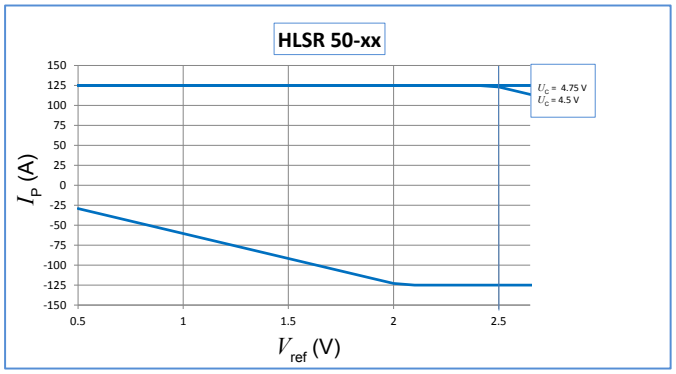

PCB footprint (in mm)

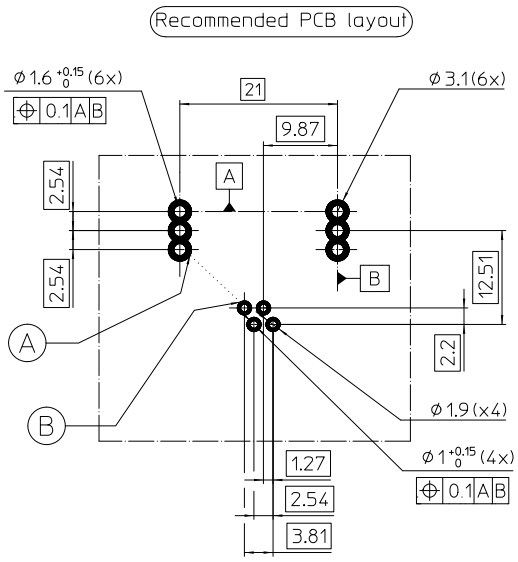

	d_{Cl} (mm)	d_{Cp} (mm)
A-B	9.42	9.42

Assembly on PCB

- Recommended PCB hole diameter — 1.6 mm for primary pins; 1 mm for secondary pins
- Maximum PCB thickness — 2.4 mm
- Wave soldering profile — maximum 260 °C for 10 s
  No clean process only.

Safety

This transducer must be used in limited-energy secondary circuits according to IEC 61010-1.



This transducer must be used in electric/electronic equipment with respect to applicable standards and safety requirements in accordance with the manufacturer's operating instructions.



Caution, risk of electrical shock
When operating the transducer, certain parts of the module can carry hazardous voltage (e.g. primary busbar, power supply). Ignoring this warning can lead to injury and/or cause serious damage.
This transducer is a build-in device, whose conducting parts must be inaccessible after installation.
A protective housing or additional shield could be used. Main supply must be able to be disconnected.

Remarks

- V_{out} is positive with respect to V_{ref} when positive I_P flows in direction of the arrow shown on the drawing above
- Installation of the transducer must be done unless otherwise specified on the datasheet, according to LEM Transducer Generic Mounting Rules. Please refer to LEM document N°ANE120504 available on our Web site: **Products/Product Documentation.**

Dimensions (in mm. General linear tolerance ±0.2 mm)

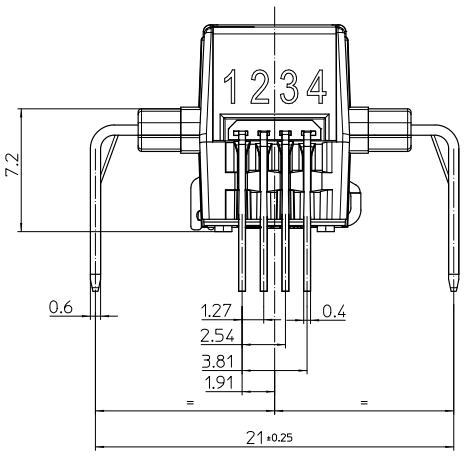

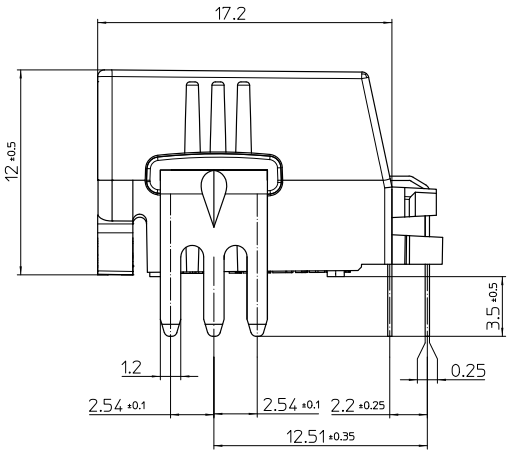

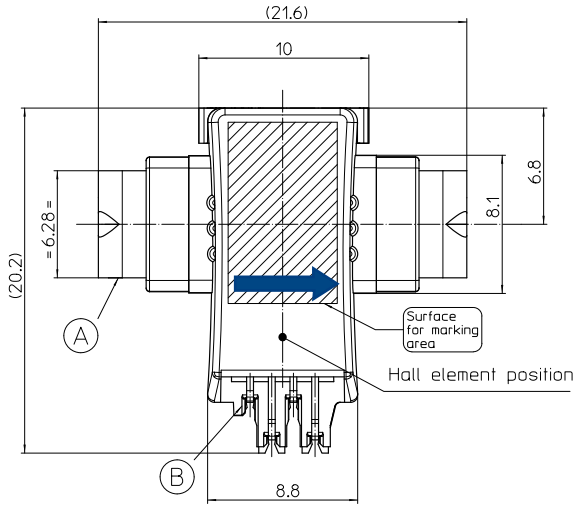

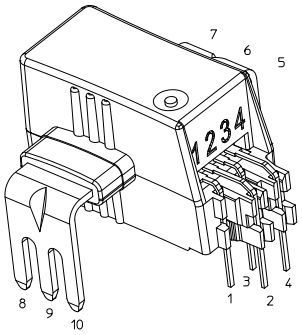

Connection

