Short-stroke cylinder, Series KHZ

0822406312

2024-04-09

AVENTICS Series KHZ Short-stroke cylinders

The AVENTICS Series KHZ is a non-standard short-stroke cylinder ideal for tight installation spaces and ensure easy, safe integration in machinery.



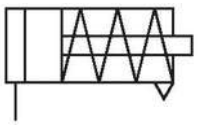

Technical data

Industry	Industrial
Piston Ø	16 mm
Stroke	25 mm
Ports	M5
Functional principle	Single-acting, retracted without pressure
Cushioning	Elastic cushioning
Magnetic piston	Piston without magnet
Environmental requirements	Industry standard
Piston rod thread - type	Internal thread
Piston rod thread	M5
Piston rod	single
Scraper	Standard Industry Scraper
Pressure for determining piston forces	6,3 bar
Retracting piston force	8 N
Extracting piston force	127 N
Min. ambient temperature	-25 °C
Max. ambient temperature	80 °C
Min. working pressure	1.5 bar
Max. working pressure	10 bar
Weight	0.114 kg
Medium	Compressed air

Short-stroke cylinder, Series KHZ

0822406312

Min. medium temperature	-25 °C
~~Max. medium temperature~~	~~80 °C~~
Max. particle size	50 µm
Min. oil content of compressed air	0 mg/m³
Max. oil content of compressed air	5 mg/m³

Material

Piston rod	Stainless Steel
Piston material	Nitrile rubber
Material, front cover	Brass
Cylinder tube	Aluminum
End cover	Aluminum
Part No.	0822406312

Technical information

Other versions can be ordered from AVENTICS sales offices.

For 0822406310 piston material: Polyurethane

The pressure dew point must be at least 15 °C less than ambient and medium temperature and may not exceed 3 °C.

The oil content of compressed air must remain constant during the life cycle.

Use only the approved oils from AVENTICS. Further information can be found in the “Technical information” document (available in https://www.emerson.com/en-us/support).

Short-stroke cylinder, Series KHZ

0822406312

Dimensions

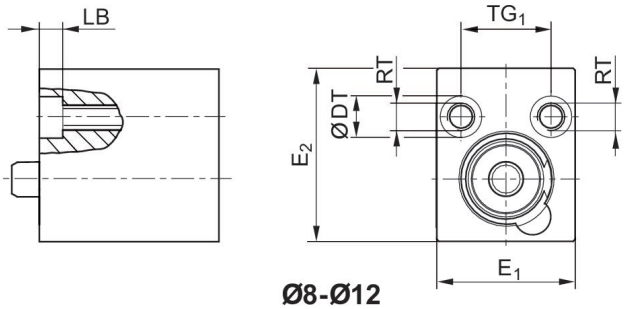

Ø8-Ø12

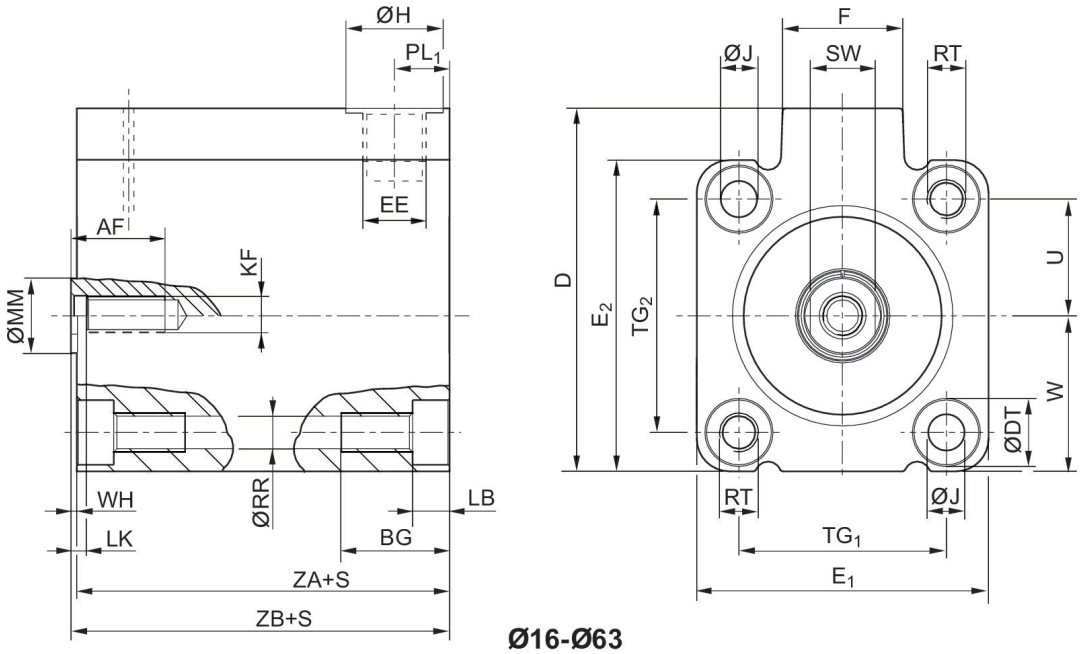

Ø16-Ø63

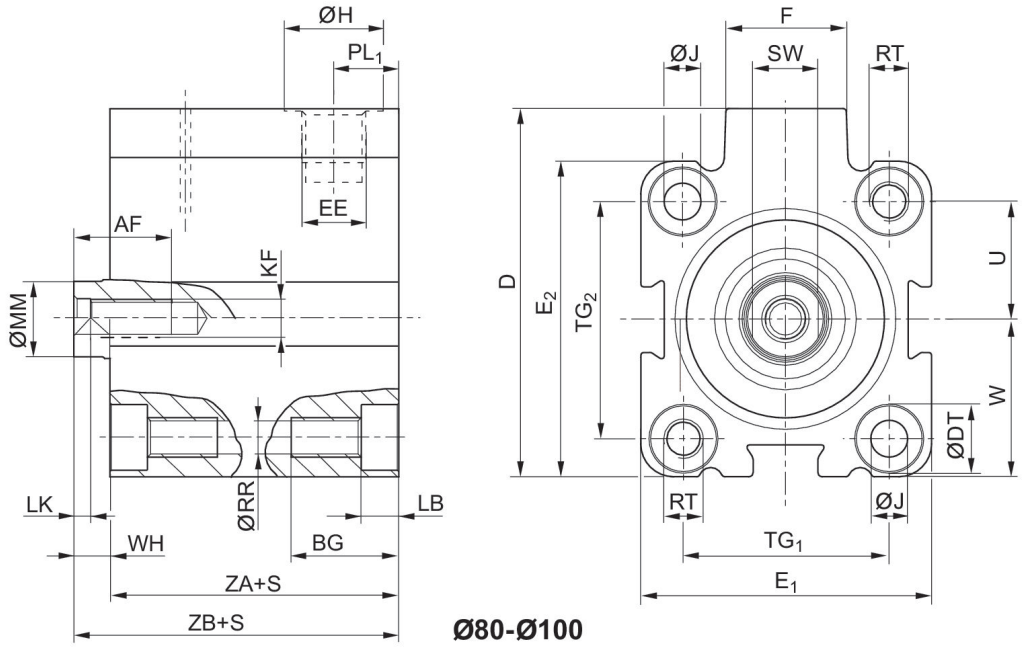

Ø80-Ø100

S = stroke

Short-stroke cylinder, Series KHZ

0822406312

Part No.	Piston Ø	S	AF +1	BG min.	D JS15	ØDT H13	E1 JS15	E2 JS15	EE
0822406001	8	4	–	8	–	6	18	20	M5
0822406020	12	4	–	9	–	6	20	25	M5
0822406021	12	10	–	9	–	6	20	25	M5
0822406310	16	4	10	12.4	33	6	28	28	M5
0822406311	16	10	10	12.4	33	6	28	28	M5
0822406312	16	25	10	17.5	33	6	28	28	M5
0822406320	20	4	9	13.6	37	7.5	32	32	M5
0822406321	20	10	10	13.6	37	7.5	32	32	M5
0822406322	20	25	10	13.6	37	7.5	32	32	M5
0822406330	25	5	10	13.6	47.5	8	37	39	G1/8
0822406331	25	10	10	13.6	47.5	8	37	39	G1/8
0822406332	25	25	10	13.6	47.5	8	37	39	G1/8
0822406340	32	5	13.5	16.7	56	10	45	48	G1/8
0822406341	32	10	14.5	16.7	56	10	45	48	G1/8
0822406342	32	25	14.5	16.7	56	10	45	48	G1/8
0822406350	40	5	13	16.7	62.5	10	54.5	54.5	G1/8
0822406351	40	10	14.5	16.7	62.5	10	54.5	54.5	G1/8
0822406352	40	25	14.5	16.7	62.5	10	54.5	54.5	G1/8
0822406361	50	10	15.5	19.8	72	11	64	64	G1/8
0822406362	50	25	15.5	19.8	72	11	64	64	G1/8
0822406371	63	10	18	25	88	15	80	80	G1/8
0822406372	63	25	18	25	88	15	80	80	G1/8
R402005783	80	25	18	25	110	15	100	100	G1/4
R402005840	100	25	20	30	132	17.5	124	124	G1/4

Part No.	Piston Ø	F	ØH	ØJ H14	KF	LB +0,4	LK +0,5	ØMM f8	PL1
0822406001	8	–	8	–	–	3.4	–	4	5
0822406020	12	–	8	–	–	3.4	–	5	5
0822406021	12	–	8	–	–	3.4	–	5	5
0822406310	16	11.5	8	3.55	M5	3.4	2	8	5
0822406311	16	11.5	8	3.55	M5	3.4	2	8	5
0822406312	16	11.5	8	3.55	M5	8.5	2	8	5
0822406320	20	11	8	4.55	M5	4.6	2	10	5
0822406321	20	11	8	4.55	M5	4.6	2	10	5
0822406322	20	11	8	4.55	M5	4.6	2	10	5
0822406330	25	17.5	15	4.55	M5	4.6	2	10	8.5
0822406331	25	17.5	15	4.55	M5	4.6	2	10	8.5
0822406332	25	17.5	15	4.55	M5	4.6	2	10	8.5
0822406340	32	18.5	15	5.5	M6	5.7	2.5	12	8.5
0822406341	32	18.5	15	5.5	M6	5.7	2.5	12	8.5
0822406342	32	18.5	15	5.5	M6	5.7	2.5	12	8.5
0822406350	40	18.5	15	5.5	M6	5.7	2.5	12	8.5
0822406351	40	18.5	15	5.5	M6	5.7	2.5	12	8.5
0822406352	40	18.5	15	5.5	M6	5.7	2.5	12	8.5

Short-stroke cylinder, Series KHZ

0822406312

2024-04-09

Part No.	Piston Ø	F	ØH	ØJ H14	KF	LB +0,4	LK +0,5	ØMM f8	PL1
0822406361	50	18	15	7.3	M8	6.8	3.5	16	8.5
0822406362	50	18	15	7.3	M8	6.8	3.5	16	8.5
0822406371	63	23	15	9.2	M8	9	3.5	16	8.5
0822406372	63	23	15	9.2	M8	9	3.5	16	8.5
R402005783	80	27	19	9.2	M10	9	4	20	12
R402005840	100	28	19	11	M12	11	4	25	12

Part No.	Piston Ø	ØRR	RT	SW -0,3	TG1	TG2	U	W	WH
0822406001	8	3.3	M4	–	11 ±0,2	–	8	6,5 ±0,2	1
0822406020	12	3.3	M4	–	13 ±0,2	–	9	9 ±0,2	1
0822406021	12	3.3	M4	–	13 ±0,2	–	9	9 ±0,2	4
0822406310	16	3.3	M4	7	20 ±0,2	20 ±0,2	10	14 ±0,2	1
0822406311	16	3.3	M4	7	20 ±0,2	20 ±0,2	10	14 ±0,2	1
0822406312	16	3.3	M4	7	20 ±0,2	20 ±0,2	10	14 ±0,2	1
0822406320	20	4.2	M5	8	22 ±0,2	22 ±0,2	11	16 ±0,2	1
0822406321	20	4.2	M5	8	22 ±0,2	22 ±0,2	11	16 ±0,2	1
0822406322	20	4.2	M5	8	22 ±0,2	22 ±0,2	11	16 ±0,2	1
0822406330	25	4.2	M5	8	26 ±0,25	28 ±0,25	14	19,5 ±0,2	1
0822406331	25	4.2	M5	8	26 ±0,25	28 ±0,25	14	19,5 ±0,2	1
0822406332	25	4.2	M5	8	26 ±0,25	28 ±0,25	14	19,5 ±0,2	1
0822406340	32	5.05	M6	10	32 ±0,25	36 ±0,25	18	24 ±0,2	1
0822406341	32	5.05	M6	10	32 ±0,25	36 ±0,25	18	24 ±0,2	1
0822406342	32	5.05	M6	10	32 ±0,25	36 ±0,25	18	24 ±0,2	1
0822406350	40	5.05	M6	10	40 ±0,25	40 ±0,25	20	27,3 ±0,2	1
0822406351	40	5.05	M6	10	40 ±0,25	40 ±0,25	20	27,3 ±0,2	1
0822406352	40	5.05	M6	10	40 ±0,25	40 ±0,25	20	27,3 ±0,2	1
0822406361	50	6.8	M8	13	50 ±0,25	50 ±0,25	25	32 ±0,2	1
0822406362	50	6.8	M8	13	50 ±0,25	50 ±0,25	25	32 ±0,2	1
0822406371	63	8.5	M10	13	62 ±0,25	62 ±0,25	31	40 ±0,2	1
0822406372	63	8.5	M10	13	62 ±0,25	62 ±0,25	31	40 ±0,2	2
R402005783	80	8.5	M10	17	82 ±0,3	82 ±0,3	41	50 ±0,3	1
R402005840	100	10.2	M12	22	103 ±0,3	103 ±0,3	51.5	62 ±0,3	1

Part No.	Piston Ø	ZA ±0,2	ZB ±0,8
0822406001	8	12	13
0822406020	12	12	13
0822406021	12	16	20
0822406310	16	20	21
0822406311	16	22	23
0822406312	16	28	29
0822406320	20	16	17
0822406321	20	22	23
0822406322	20	28	29
0822406330	25	21	22
0822406331	25	22	23
0822406332	25	30	31
0822406340	32	21	22

Short-stroke cylinder, Series KHZ

0822406312

Part No.	Piston Ø	ZA ±0,2	ZB ±0,8
0822406341	32	22	23
0822406342	32	32.5	33.5
0822406350	40	21	22
0822406351	40	21	22
0822406352	40	32.5	33.5
0822406361	50	20	21
0822406362	50	32.5	33.5
0822406371	63	25	26
0822406372	63	35.5	37.5
R402005783	80	42	43
R402005840	100	49.5	50.5

Overview drawing

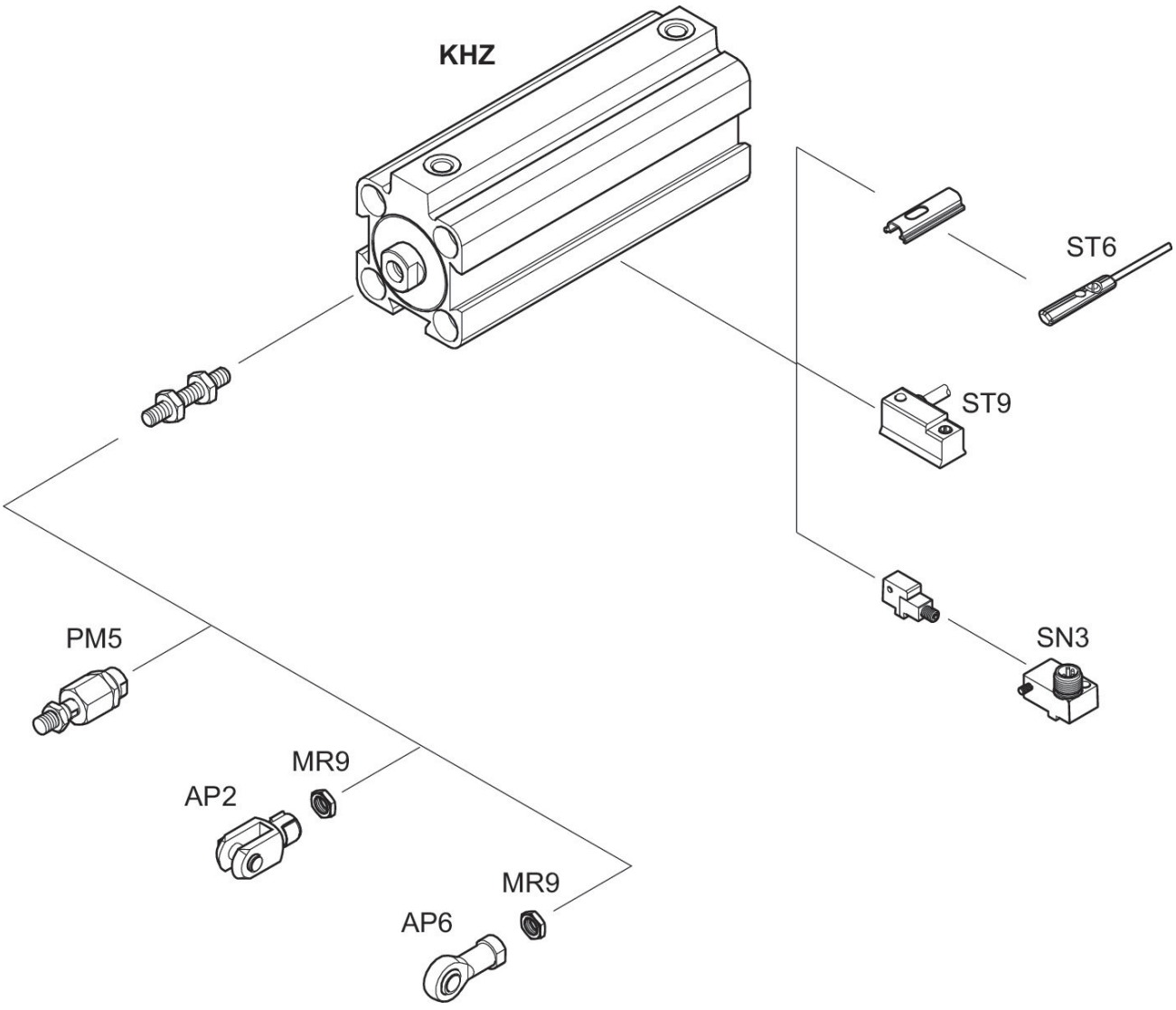

NOTE: This overview drawing is only for orientation to indicate where the various accessory parts can be fastened to the cylinder. The illustration has been simplified for this purpose. It is thus not possible to derive the dimensions from this overview.