Electrical installation solutions for buildings
Protection and safety

Index

Type T1-T2 OVR pluggable

Single pole	5/10
TNC 230 and 400 V networks	5/14
TNS/TT 230 1Ph+N and 3Ph+N networks	5/16
TNS/TT 400 V 1Ph+N and 3Ph+N networks	5/18

Type 2 OVR pluggable

QuickSafe® Single pole 230 V networks	5/24
QuickSafe® Single pole 400 V networks	5/28
QuickSafe® TNC 230 V networks	5/32
QuickSafe® TNC 400 V networks	5/34
QuickSafe® TNS 230 V networks	5/36
QuickSafe® TNS 400 V networks	5/38
QuickSafe® TNS/TT 230 and 400 V 1Ph+N networks	5/40
QuickSafe® TNS/TT 230 and 400 V 3Ph+N networks	5/42

Type T2-T3 OVR Pluggable

QuickSafe® Single pole 230 and 440 V networks	5/46
QuickSafe® TNC 230 V 3Ph +N networks	5/48
QuickSafe® TNS/TT 230 V 1Ph +N networks	5/50
QuickSafe® TT 230 and 400 V 3Ph +N networks	5/52
TT - 230 V and 400 V 3Ph +N networks	5/53

OVR PV

SPDs for photovoltaic networks	5/54

Digital SPDs eOVR	5/57
eOVR T1-T2	5/64
eOVR T2	5/68
eOVR T2-T3	5/72

Accessories for OVR	5/76

OVR UL Version

OVR Type 2 Single pole	5/80
OVR Type 2 Single phase networks	5/81
OVR Type 2 Delta networks	5/86
OVR Type 2 Split phase networks	5/88
OVR Type 2 Grounded Wye networks	5/89
OVRHTP (60 to 200 kA)	5/96
OVRHTP (240 to 400 kA)	5/98
OVRHT3B Sub Distribution and Panelboard	5/100
OVRHT3C Sub Distribution and Panelboard	5/102
OVRHS3U Sub Distribution and Panelboard	5/104
OVRHTP series Dimensions	5/106

Legacy GE

TPME series SPD	5/112
TPHE series SPD	5/113
TME series SPD	5/114
THE series SPD	5/115
TLE series SPD	5/116
TME series SPD	5/117
TPHE series integrated SPD	5/118
TPME series integrated SPD	5/120
9” box extension SPD	5/124
24” box extension SPD	5/125
Legacy GE product Dimensions	5/127

OVR data and telecom

OVR SL Series	5/137
OVR SL X Series	5/139
OVR D Series	5/141
OVR E Series	5/143
OVR H Series	5/145
OVR SL 3-Wire Series	5/147
OVR SL LED 4-20 mA Series	5/149
OVR Q Series	5/151
OVR RTD, RTDQ & SL RTD Series	5/153
OVR KT & KE Series	5/155
OVR TN/RJ11 & ISDN/RJ45 Series	5/157
OVR TN, TNQ & SL TN Series	5/159
OVR Cat-5 & Cat-6 Series	5/161
OVR RS485, RS485Q & SL RS485 Series	5/164
OVR RF Series	5/165
OVR CCTV Series	5/167
OVR 240-16A	5/169
OVR TV Series	5/171
Protector accessories	5/173

Fuse Protection Devices

E 90 fuse switch disconnectors	5/179
E 90h fuseholders	5/181
E 90 PV fuse disconnectors	5/182
E 90 PV 1500 fuse holder	5/183
E 90 50/125 fuse disconnectors	5/184
E 90 CC fuseholders	5/185
E 90 J fuse fuseholders	5/186
Cylindrical fuses E 9F	5/187
ILTS-E D0 Fuse-switch-disconnectors	5/196
ISS D0 Fuse carriers	5/197
Busbars and accessories for ILTS-E and ISS	5/198

Other Protection Devices

Electronic Protection Devices for use behind 24 V DC Switch Mode Power Supplies	5/200
SQZ3 phase and sequence relay	5/203
E 236 undervoltage monitoring relays	5/204
ISL industrial insulation monitoring devices	5/207

H+ Line

H+Line products	5/213
ISOLTESTER-DIG insulation monitoring devices	5/215
SELVTESTER insulation monitoring devices for insulated networks at 24 V AC/DC	5/217
QSD remote signalling panel	5/218
TI switchboards and devices for medical locations	5/219
QSO selection table	5/220
QSO switchboards and components for medical locations	5/221

OVR T1-T2, T2 and T2-T3 ranges. The details make the difference

A complete range for your surge protection

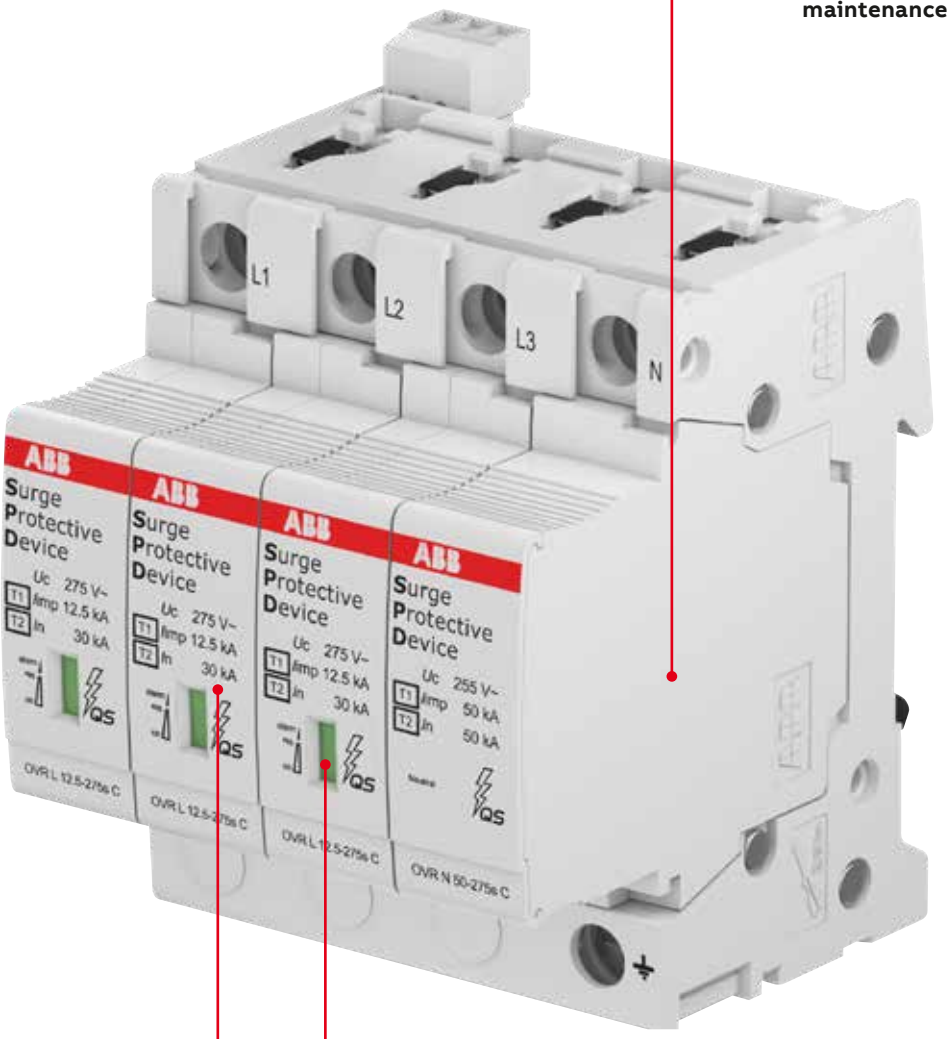

Pluggable cartridge for easy replacement during maintenance operations.

Clear information on the front of the product indicating the technical characteristics of the OVR.

Safety Reserve system with two varistors per line to extend protection lifetime.

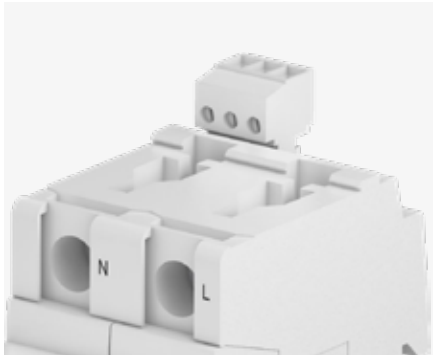

OVR T1-T2 12.5, T2 and T2-T3 ranges are using same terminal as Pro M compact devices to guarantee a complete coordination and time saving in wiring operation.



The pluggable feature of ABB **OVR T1-T2, T2 and T2-T3** surge protective devices (SPDs) facilitates maintenance. Should one or more worn cartridges need to be replaced, the wires do not have to be removed.



The end-of-life indicator of the SPD signals the status of the device.
A mechanical indicator turns from green to red when the SPD reaches the end of its life, when the end-of-life indicator is fitted.



A safety reserve system for an extended protection. T1-T2s and T2s. These Surge Protective Devices are equipped with two varistors per pole. If one varistor is damaged, the SPD gives advanced warning that it is approaching the end of its life while the other varistor continues to protect the equipment, allowing to perform Preventive Maintenance.



QuickSafe MOV technology extended to SPD dedicated to D.C photovoltaic applications, bringing seft-protected feature (no back-up needed) up to 10 kA PV short circuit current.

Protection and safety

OVR surge protective devices selection tables

Protected lines	Impulse current	Max. discharge current	Nominal current	Follow current interrupting rating	Voltage protection level	Nominal voltage	Max. cont. operating voltage	Order details	
	Iimp 10/350	Imax 8/20	In	Ifi	Up	Un	Uc		
	kA	kA	kA	kA	kV	V	V	Type code	Order code
Type T1-T2 OVR pluggable									
Uc275 V									
1	12.5	80	20	-	1.4	230	275	OVR T1-T2 12.5-275s P TS QS	2CTB815710R0000
1+1	12.5	80	20	-	1.4	230	275	OVR T1-T2 1N 12.5-275s P TS QS	2CTB815710R0100
3	12.5	80	20	-	1.4	230/400	275	OVR T1-T2 3L 12.5-275s P TS QS	2CTB815710R0600
3+1	12.5	80	20	-	1.4	230/400	275	OVR T1-T2 3N 12.5-275s P TS QS	2CTB815710R0700
4	12.5	80	20	-	1.4	230/400	275	OVR T1-T2 4L 12.5-275s P TS QS	2CTB815710R1100
1	12.5	80	20	-	1.4	230	275	OVR T1-T2 12.5-275s P QS	2CTB815710R1200
1+1	12.5	80	20	-	1.4	230	275	OVR T1-T2 1N 12.5-275s P QS	2CTB815710R1300
3	12.5	80	20	-	1.4	230/400	275	OVR T1-T2 3L 12.5-275s P QS	2CTB815710R1800
3+1	12.5	80	20	-	1.4	230/400	275	OVR T1-T2 3N 12.5-275s P QS	2CTB815710R1900
4	12.5	80	20	-	1.4	230/400	275	OVR T1-T2 4L 12.5-275s P QS	2CTB815710R2300
Uc 440 V									
1	12.5	80	20	-	1.9	400	440	OVR T1-T2 12.5-440s P TS QS	2CTB815710R2900
1+1	12.5	80	20	-	1.9	400	440	OVR T1-T2 1N 12.5-440s P TS QS	2CTB815710R3000
3	12.5	80	20	-	1.9	400/690	440	OVR T1-T2 3L 12.5-440s P TS QS	2CTB815710R3500
3+1	12.5	80	20	-	1.9	400/690	440	OVR T1-T2 3N 12.5-440s P TS QS	2CTB815710R3600
4	12.5	80	20	-	1.9	400/690	440	OVR T1-T2 4L 12.5-440s P TS QS	2CTB815710R4000
1	12.5	80	20	-	1.9	400	440	OVR T1-T2 12.5-440s P QS	2CTB815710R4100
1+1	12.5	80	20	-	1.9	400	440	OVR T1-T2 1N 12.5-440s P QS	2CTB815710R4200
3	12.5	80	20	-	1.9	400/690	440	OVR T1-T2 3L 12.5-440s P QS	2CTB815710R4700
3+1	12.5	80	20	-	1.9	400/690	440	OVR T1-T2 3N 12.5-440s P QS	2CTB815710R4800
4	12.5	80	20	-	1.9	400/690	440	OVR T1-T2 4L 12.5-440s P QS	2CTB815710R5200
Neutral									
1	50	100	50	0.1	1.4	230	275	OVR T1-T2 N 50-275s P QS	2CTB815710R2400
1	50	100	50	0.1	1.9	400	440	OVR T1-T2 N 50-440s P QS	2CTB815710R5300
Cartridges									
1	12.5	80	20	-	1.4	230	275	OVR T1-T2 12.5-275s C QS	2CTB815710R2600
1	12.5	80	20	-	1.9	400	440	OVR T1-T2 12.5-440s C QS	2CTB815710R5500
1	50	100	50	-	1.4	230	275	OVR T1-T2 N 50-275s C QS	2CTB815710R2700
1	50	100	50	-	1.9	400	440	OVR T1-T2 N 50-440s C QS	2CTB815710R5600
Type 2 OVR non-pluggable									
Uc275 V									
1	-	20	5	-	1.05	230	275	OVR T2 20-275	2CTB804200R0100
1	-	40	20	-	1.4	230	275	OVR T2 40-275	2CTB804201R0100
1	-	20	5	-	1.05	230	275	OVR T2 20-275 (x20)	2CTB804200R1100
1	-	40	20	-	1.4	230	275	OVR T2 40-275 (x20)	2CTB804201R1100

Protection and safety

OVR surge protective devices selection tables

Protected lines	Impulse current	Max. discharge current	Nominal current	Follow current interrupting rating	Voltage protection level	Nominal voltage	Max. cont. operating voltage	Order details	
	Iimp 10/350	Imax 8/20	In	Ifi	Up	Un	Uc		
	kA	kA	kA	kA	kV	V	V	Type code	Order code
Type 2 OVR pluggable									
Uc 275 V									
1	2	40	20	-	1.25	230	275	OVR T2 40-275 P TS QS	2CTB803871R1700
1+1	2	40	20	-	1.25	230	275	OVR T2 1N 40-275 P TS QS	2CTB803972R0500
3	2	40	20	-	1.25	230/400	275	OVR T2 3L 40-275 P TS QS	2CTB803873R2500
4	2	40	20	-	1.25	230/400	275	OVR T2 4L 40-275 P TS QS	2CTB803873R5200
1	2	40	20	-	1.25	230	275	OVR T2 40-275 P QS	2CTB803871R2300
1+1	2	40	20	-	1.25	230	275	OVR T2 1N 40-275 P QS	2CTB803972R1100
3	2	40	20	-	1.25	230/400	275	OVR T2 3L 40-275 P QS	2CTB803873R2400
4	2	40	20	-	1.25	230/400	275	OVR T2 4L 40-275 P QS	2CTB803873R5600
1	2	40	20	-	1.4	230	275	OVR T2 40-275s P TS QS	2CTB815704R0000
1+1	2	40	20	-	1.4	230	275	OVR T2 1N 40-275s P TS QS	2CTB815704R0200
3	2	40	20	-	1.4	230/400	275	OVR T2 3L 40-275s P TS QS	2CTB815704R0600
4	2	40	20	-	1.4	230/400	275	OVR T2 4L 40-275s P TS QS	2CTB815704R1100
1	2	40	20	-	1.4	230	275	OVR T2 40-275s P QS	2CTB815704R1200
1+1	2	40	20	-	1.4	230	275	OVR T2 1N 40-275s P QS	2CTB815704R1400
3	2	40	20	-	1.4	230/400	275	OVR T2 3L 40-275s P QS	2CTB815704R1800
4	2	40	20	-	1.4	230/400	275	OVR T2 4L 40-275s P QS	2CTB815704R2300
1	6.25	80	20	-	1.4	230	275	OVR T2 80-275s P TS QS	2CTB815708R0000
1+1	6.25	80	20	-	1.4	230	275	OVR T2 1N 80-275s P TS QS	2CTB815708R0200
3	6.25	80	20	-	1.4	230/400	275	OVR T2 3L 80-275s P TS QS	2CTB815708R0600
4	6.25	80	20	-	1.4	230/400	275	OVR T2 4L 80-275s P TS QS	2CTB815708R1100
1	6.25	80	20	-	1.4	230	275	OVR T2 80-275s P QS	2CTB815708R1200
1+1	6.25	80	20	-	1.4	230	275	OVR T2 1N 80-275s P QS	2CTB815708R1400
3	6.25	80	20	-	1.4	230/400	275	OVR T2 3L 80-275s P QS	2CTB815708R1800
4	6.25	80	20	-	1.4	230/400	275	OVR T2 4L 80-275s P QS	2CTB815708R2300

Protection and safety

OVR surge protective devices selection tables

Protected lines	Impulse current	Max. discharge current	Nominal current	Follow current interrupting rating	Voltage protection level	Nominal voltage	Max. cont. operating voltage	Order details	
	Iimp 10/350	Imax 8/20	In	Ifi	Up	Un	Uc		
	kA	kA	kA	kA	kV	V	V	Type code	Order code
Neutral									
1	2	80	30	0.1	1.4	230	275	OVR T2-T3 N 80-275 P QS	2CTB803973R1900
1	6.25	80	30	0.1	1.4	230	275	OVR T2 N 80-275s P QS	2CTB815708R2500
Cartridges									
1	2	80	30	-	1.4	230	275	OVR T2-T3 N 80-275 C QS	2CTB803876R0000
1	2	40	20	-	1.25	230	275	OVR T2 40-275 C QS	2CTB803876R1000
1	6.25	40	20	-	1.4	230	275	OVR T2 40-275s C QS	2CTB815704R2600
1	6.25	80	20	-	1.4	230	275	OVR T2 80-275s C QS	2CTB815708R2600
1	6.25	80	30	-	1.4	230	275	OVR T2 N 80-275s C QS	2CTB815708R2800
Uc 350V									
1	2	40	20	-	1.5	230	350	OVR T2 40-350 P QS	2CTB803881R2300
1	2	40	20	-	1.5	230	350	OVR T2 40-350 P TS QS	2CTB803881R1700
1+1	2	40	20	-	1.7	230	350	OVR T2 1N 40-350 P QS	2CTB803982R1100
1+1	2	40	20	-	1.7	230	350	OVR T2 1N 40-350 P TS QS	2CTB803982R0500
3	2	40	20	-	1.5	230/400	350	OVR T2 3L 40-350 P QS	2CTB803883R2400
3	2	40	20	-	1.5	230/400	350	OVR T2 3L 40-350 P TS QS	2CTB803883R2500
3+1	2	40	20	-	1.7	230/400	350	OVR T2 3N 40-350 P QS	2CTB803983R1100
3+1	2	40	20	-	1.7	230/400	350	OVR T2 3N 40-350 P TS QS	2CTB803983R0500
Neutral									
1	2	80	30	0.1	1.4	230	350	OVR T2 N 80-350 P QS	2CTB803983R1900
Cartridges									
1	2	80	30	-	1.4	230	350	OVR T2 N 80-350 C QS	2CTB803886R0000
1	2	40	20	-	1.5	230	350	OVR T2 40-350 C QS	2CTB803886R1000
Uc 440V									
1	2	40	20	-	1.8	400	440	OVR T2 40-440 P QS	2CTB803871R1200
1	2	40	20	-	1.8	400	440	OVR T2 40-440 P TS QS	2CTB803871R0500
3	2	40	20	-	1.8	400/690	440	OVR T2 3L 40-440 P TS QS	2CTB803873R2700
4	2	40	20	-	1.8	400/690	440	OVR T2 4L 40-440 P QS	2CTB803873R5100
4	2	40	20	-	1.8	400/690	440	OVR T2 4L 40-440 P TS QS	2CTB803873R5300
3+1	2	40	20	-	2.1	400/690	440	OVR T2 3N 40-440 P QS	2CTB803973R1400
3+1	2	40	20	-	2.1	400/690	440	OVR T2 3N 40-440 P TS QS	2CTB803973R1500
3	2	40	20	-	1.8	400/690	440	OVR T2 3L 40-440 P QS	2CTB803873R2800
1	2	40	20	-	1.8	400	440	OVR T2 40-440s P TS QS	2CTB815704R2900
3+1	2	40	20	-	1.8	400/690	440	OVR T2 3N 40-440s P TS QS	2CTB815704R3700
1	2	40	20	-	1.8	400	440	OVR T2 40-440s P QS	2CTB815704R4100
1	6.25	80	20	-	1.8	400	440	OVR T2 80-440s P TS QS	2CTB815708R2900
3	6.25	80	20	-	1.8	400/690	440	OVR T2 3L 80-440s P TS QS	2CTB815708R3500
3+1	6.25	80	20	-	1.8	400/690	440	OVR T2 3N 80-440s P TS QS	2CTB815708R3700
4	6.25	80	20	-	1.8	400/690	440	OVR T2 4L 80-440s P TS QS	2CTB815708R4000
1	6.25	80	20	-	1.8	400	440	OVR T2 80-440s P QS	2CTB815708R4100
3	6.25	80	20	-	1.8	400/690	440	OVR T2 3L 80-440s P QS	2CTB815708R4700
3+1	6.25	80	20	-	1.8	400/690	440	OVR T2 3N 80-440s P QS	2CTB815708R4900
4	6.25	80	20	-	1.8	400/690	440	OVR T2 4L 80-440s P QS	2CTB815708R5200
1+1	2	40	20	-	1.9	400	440	OVR T2 1N 40-440 P TS QS	2CTB803972R1400

Protection and safety

OVR surge protective devices selection tables

Protected lines	Impulse current	Max. discharge current	Nominal current	Follow current interrupting rating	Voltage protection level	Nominal voltage	Max. cont. operating voltage	Order details	
	Iimp 10/350	Imax 8/20	In	Ifi	Up	Un	Uc		
	kA	kA	kA	kA	kV	V	V	Type code	Order code
Neutral									
1	6.25	80	30	0.1	2	400	440	OVR T2 N 80-440s P QS	2CTB815708R5400
1	2	80	30	0.1	1.4	400	440	OVR T2-T3 N 80-440 P QS	2CTB803973R2000
Cartridges									
1	2	80	20	-	1.8	400	440	OVR T2 40-440 C QS	2CTB803876R0400
1	2	40	20	-	1.8	400	440	OVR T2-T3 40-440s C QS	2CTB815704R5500
1	6.25	80	20	-	1.8	400	440	OVR T2 80-440s C QS	2CTB815708R5500
1	6.25	80	30	-	1.4	400	440	OVR T2-T3 N 80-440 C QS	2CTB803886R0100
1	6.25	80	30	-	2	400	440	OVR T2 N 80-440s C QS	2CTB815708R5700
Type T2-T3 OVR Pluggable									
Uc 275V									
1	2	20	5	-	0.9	230	275	OVR T2-T3 20-275 P QS	2CTB803871R2400
1	2	20	5	-	0.9	230	275	OVR T2-T3 20-275 P TS QS	2CTB803871R2500
1+1	2	20	5	-	1.4	230	275	OVR T2-T3 1N 20-275 P QS	2CTB803972R1200
1+1	2	20	5	-	1.4	230	275	OVR T2-T3 1N 20-275 P TS QS	2CTB803972R1300
3	2	20	5	-	0.85	230/400	275	OVR T2-T3 3L 20-275 P QS	2CTB803873R3400
3	2	20	5	-	0.85	230/400	275	OVR T2-T3 3L 20-275 P TS QS	2CTB803873R3500
3+1	2	20	5	-	1.4	230/400	275	OVR T2-T3 3N 20-275 P QS	2CTB803973R1200
3+1	2	20	5	-	1.4	230/400	275	OVR T2-T3 3N 20-275 P TS QS	2CTB803973R1600
Neutral									
1	2	80	30	0.1	1.4	230	275	OVR T2-T3 N 80-275 P QS	2CTB803973R1900
Cartridges									
1	2	20	5	-	1.4	230	275	OVR T2 20-275 C QS	2CTB803876R1200
1	2	80	30	-	1.4	230	275	OVR T2-T3 N 80-275 C QS	2CTB803876R0000
Uc 440V									
1	2	20	5	-	1.4	400	440	OVR T2-T3 20-440 P QS	2CTB803871R1100
1	2	20	5	-	1.4	400	440	OVR T2-T3 20-440 P TS QS	2CTB803871R1300
3+1	2	20	5	-	1.4	400/690	440	OVR T2-T3 3N 20-440 P QS	2CTB803973R1300
Neutral									
1		80	30	0.1	1.4	400	440	OVR T2-T3 N 80-440 P QS	2CTB803973R2000
Cartridges									
1	2	80	5	0.1	1.4	400	440	OVR T2 20-440 C QS	2CTB803876R0600
1	2	80	30	0.1	1.4	400	440	OVR T2-T3 N 80-440 C QS	2CTB803886R0100

Protection and safety

OVR surge protective devices selection tables

Protected lines	Total Discharge Current	Impulse current	Max. discharge current	Nominal current	Short-circuit current rating	Voltage protection level	Nominal voltage	Max. cont. operating voltage	Order details	
	Itotal 10/350	Iimp 10/350	Imax 8/20	In	Iscpv	Up	Un	Uc		
	kA	kA	kA	kA	A	kV	V	V	Type code	Order code
Type T1-T2 OVR pluggable PV application										
Uc 1100 V DC										
1+1 DC	5	5	40	20	11.000	3.8	1000	1100	OVR PV T1-T2 5-1000 P QS	2CTB812050R1000
1+1 DC	5	5	40	20	11.000	3.8	1000	1100	OVR PV T1-T2 5-1000 P TS QS	2CTB812051R1000
1+1 DC	6,25	12.5	40	20	11.000	3.8	1000	1100	OVR PV T1-T2 12.5-1000 P QS	2CTB812120R1000
1+1 DC	6,25	12.5	40	20	11.000	3.8	1000	1100	OVR PV T1-T2 12.5-1000 P TS QS	2CTB812121R1000
Cartridges										
1+1 DC	5	5	40	20	11.000	-	1000	1100	OVR PV T1-T2 5-1000 C QS	2CTB812052R1000
1+1 DC	6,25	6,25	40	20	11.000	-	1000	1100	OVR PV T1-T2 12.5-1000 C QS	2CTB812122R1000
1+1 DC	6,25	6,25	40	20	11.000	-	1000	1100	OVR PV T1-T2 12.5-1000 M C QS	2CTB812122R1001
Uc 1500 V DC										
1+1 DC	5	5	30	20	11.000	5	1500	1500	OVR PV T1-T2 5-1500 P QS	2CTB812050R1500
1+1 DC	5	5	30	20	11.000	5	1500	1500	OVR PV T1-T2 5-1500 P TS QS	2CTB812051R1500
1+1 DC	5	10	30	20	11.000	5	1500	1500	OVR PV T1-T2 10-1500 P QS	2CTB812100R1500
1+1 DC	5	10	30	20	11.000	5	1500	1500	OVR PV T1-T2 10-1500 P TS QS	2CTB812101R1500
Cartridges										
1+1 DC	5	5	30	20	11.000	-	1500	1500	OVR PV T1-T2 5-1500 C QS	2CTB812052R1500
1+1 DC	5	5	30	20	11.000	-	1500	1500	OVR PV T1-T2 10-1500 C QS	2CTB812102R1500
1+1 DC	5	5	30	20	11.000	-	1500	1500	OVR PV T1-T2 10-1500 M C QS	2CTB812102R1501

Protection and safety

OVR surge protective devices selection tables

Protected lines	Impulse current	Max. discharge current	Nominal current	Short-circuit current rating	Voltage protec-tion level	Nominal voltage	Max. cont. operating voltage	Order details	
	Iimp 10/350	Imax 8/20	In	Iscpv	Up	Un	Uc		
	kA	kA	kA	A	kV	V	V	Type code	Order code
Type 2 OVR pluggable PV applications									
Uc 1000 V DC									
1+1 DC	-	40	20	10.000	4	1000	1000	OVR PV T2 40-1000 P	2CTB802400R1000
1+1 DC	-	40	20	10.000	4	1000	1000	OVR PV T2 40-1000 P TS	2CTB802401R1000
Cartridges									
1+1 DC	-	40	20	10.000	-	1000	1000	OVR PV T2 40-1000 C	2CTB802402R1000
Uc 1500 V DC									
1+1 DC	-	40	15	10.000	5	1500	1500	OVR PV T2 40-1500 P	2CTB802400R1500
1+1 DC	-	40	10	10.000	5	1500	1500	OVR PV T2 40-1500 P TS	2CTB802401R1500
Cartridges									
1+1 DC	2	40	10	10.000	-	1500	1500	OVR PV T2 40-1500 C	2CTB802402R1500



OVR PV T2 40-1000 P TS

Protection and safety

OVR Type 1+2 surge protective devices Single pole



OVR T1-T2 12.5-275s P QS

Technical features

Types			**OVR T1-T2 12.5-275s P QS**
with auxiliary contact (TS)			**OVR T1-T2 12.5-275s P TS QS**
Technology			Varistor
Electrical features			
Standard			IEC 61643-11/EN 61643-11:2012/A11:2018
Type/test class			T1-T2/I - II
Protected lines			1
System network			TT (L-N) - TNS - TNC
Type of current			AC 47-63 Hz
Voltage regulation of the system network			± 20 %
Nominal system voltage Un		[V]	230
Max. cont. operating voltage Uc		[V]	275
Maximum impulse current Iimp (10/350)		[kA]	12.5
Nominal discharge current In 8/20)		[kA]	20
Maximum discharge current Imax (8/20)		[kA]	80
Follow current interrupting rating Ifi		[kA]	-
Voltage protection level Up at In (L-N/N-PE/L-PE)		[kV]	1.4/-/1.4
Voltage protection level Ures at 3 kA		[kV]	0.5
TOV (Temporary overvoltage) withstand Ut (L-N: 5s./N-PE: 200ms)		[V]	337/
Response time		[ns]	< 25
Short-circuit withstand capability Isccr		[kA]	100
Backup protection maximum rating	fuse (gG)	[A]	≤ 160
	circuit breaker (B or C curve)	[A]	≤ 125
Pluggable cartridge			Yes
Integrated thermal disconnector			Yes
State indicator			Yes
Safety reserve			Yes
Auxiliary contact			Yes (TS option)
Installation			
Wire range (L, N, PE)	solid wire	[mm²]	2.5 ... 35
	stranded wire	[mm²]	2.5 ... 25
Stripping length (L, N, PE)		[mm]	12.5
Tightening torque (L, N, PE)		[Nm]	2.8
Auxiliary contact (TS)			
Contacts information			1 NO - 1 NC
Min. load			12 V DC - 10 mA
Max. load			250 V AC - 1A
Connection cross-section		[mm²]	6.5
Miscellanous characteristics			
Stocking and operating temperature		[°C]	-40 to +80
Maximal Altitude		[m]	5000
Degree of protection			IP 20 - Indoor
Fire resistance according to UL 94			V-0
Dimensions			
height x width x depth		[mm]	88 x 17.8 x 76.7
		[inches]	3.46 x 0.70 x 3.02
Dimensions with auxilary contact (TS)			
height x width x depth		[mm]	95.8 x 17.8 x 76.7
		[inches]	3.77 x 0.70 x 3.02
Replacement Cartridges			
Phase Product ID			OVR T1-T2 12.5-275s C QS 2CTB815710R2600
Neutral Product ID			-

Protection and safety

OVR Type 1+2 surge protective devices Single pole

OVR T1-T2 12.5-440s P QS	OVR T1-T2 N 50-275s P QS	OVR T1-T2 N 50-440s P QS
OVR T1-T2 12.5-440s P TS QS		
Varistor	GDT	GDT
IEC 61643-11/EN 61643-11:2012/A11:2018	IEC 61643-11/EN 61643-11:2012/A11:2018	IEC 61643-11/EN 61643-11:2012/A11:2018
T1-T2/I - II	T1-T2/I - II	T1-T2/I - II
1	N	N
TT (L-N) - TNS - TNC	TT (N-PE) - TNS (N-PE)	TT (N-PE) - TNS (N-PE)
AC 47-63 Hz	AC 47-63 Hz	AC 47-63 Hz
± 10%	± 20%	± 10%
400	230	400
440	275	440
12.5	50	50
20	50	50
80	100	100
-	0.1	0.1
1.9/-/1.9	-/1.4/-	-/1.9/-
0.5	-	-
581/	-/1200	-/1200
< 25	≤10	≤10
100	≤100	≤100
≤ 160	-	-
≤ 125	-	-
Yes	Yes	Yes
Yes	No	No
Yes	No	No
Yes	No	No
Yes (TS option)	No	No
2.5 ... 35	2.5 ... 50	2.5 ... 50
2.5 ... 25	2.5 ... 35	2.5 ... 35
12.5	12.5	12.5
2.8	3.5	3.5
1 NO - 1 NC		
12 V DC - 10 mA		
250 V AC - 1A		
6.5		
-40 to +80	-40 to +80	-40 to +80
5000	5000	5000
IP 20 - Indoor	IP 20 - Indoor	IP 20 - Indoor
V-0	V0	V0
88 x 35.6 x 76.7	88 x 17.8 x 76.7	88 x 17.8 x 76.7
3.46 x 1.4 x 3.02	3.46 x 0.7 x 3.02	3.46 x 0.7 x 3.02
95.8 x 35.6 x 76.7		
3.77 x 1.4 x 3.02		
OVR T1-T2 12.5-440s C QS 2CTB815710R5500		
-	OVR T1-T2 N 50-275s C QS 2CTB815710R2700	OVR T1-T2 N 50-440s C QS 2CTB815710R5600

Protection and safety

OVR Type 1+2 surge protective devices Single pole

Type 1+2 surge protective devices are designed to discharge high current surges without any destruction of the installation. These surge protective devices are characterized by their capacity to withstand impulse current with 10/350 µs wave form which simulate natural lightning current.
Type 1+2 ABB surge protective devices have a high impulse current withstand capacity with ensuring a low protection level (Up).
Type 1+2 SPDs can be installed at the entrance in the main switch board for a global protection of the electrical installation.

Poles	Impulse current Iimp 10/350	Max. discharge current Imax 8/20	Follow current interrupting rating Ifi	Voltage protection level Up	Nominal voltage Un	Max. cont. operating voltage Uc	Bbn 3660308	Order details		Weight 1 piece
							EAN			kg
	kA	kA	kA	kV	V	V		Type code	Order code	
1	12.5	80	-	1.4	230	275	524881	OVR T1-T2 12.5-275s P TS QS	2CTB815710R0000	0.15
1	12.5	80	-	1.4	230	275	524959	OVR T1-T2 12.5-275s P QS	2CTB815710R1200	0.15
1	12.5	80	-	1.9	400	440	525055	OVR T1-T2 12.5-440s P TS QS	2CTB815710R2900	0.30
1	12.5	80	-	1.9	400	440	525123	OVR T1-T2 12.5-440s P QS	2CTB815710R4100	0.30
1	50	100	0.1	1.4	230	275	525024	OVR T1-T2 N 50-275s P QS	2CTB815710R2400	0.15
1	50	100	0.1	1.9	400	440	525192	OVR T1-T2 N 50-440s P QS	2CTB815710R5300	0.14

Notes

Protection and safety

OVR Type 1+2 surge protective devices TNC 230 and 400 V networks

Technical features

Types			OVR T1-T2 3L 12.5-275s P QS	OVR T1-T2 3L 12.5-440s P QS
with auxiliary contact (TS)			**OVR T1-T2 3L 12.5-275s P TS QS**	**OVR T1-T2 3L 12.5-440s P TS QS**
Technology			Varistor	Varistor
Electrical features				
Standard			IEC 61643-11/EN 61643-11:2012/ A11:2018	IEC 61643-11/EN 61643-11:2012/ A11:2018
Type/test class			T1-T2/I - II	T1-T2/I - II
Protected lines			3	3
System network			TNC	TNC
Type of current			AC 47-63 Hz	AC 47-63 Hz
Voltage regulation of the system network			± 20%	± 10%
Nominal system voltage Un		[V]	230/400	400/690
Max. cont. operating voltage Uc		[V]	275	440
Maximum impulse current Iimp (10/350)		[kA]	12.5	12.5
Max.Imp current Tot Iimp (10/350)		[kA]	37.5	37.5
Nominal discharge current In (8/20)		[kA]	20	20
Maximum discharge current Imax (8/20)		[kA]	80	80
Follow current interrupting rating Ifi		[kA]	-	-
Voltage protection level Up at In (L-N/N-PE/L-PE)		[kV]	-/-/1.4	-/-/2
Voltage protection level Ures at 3 kA		[kV]	0.5	0.8
TOV (Temporary overvoltage) withstand Ut (L-N: 5s./N-PE: 200ms)		[V]	337/–	581/–
Response time		[ns]	≤ 25	≤ 25
Short-circuit withstand capability Isccr		[kA]	100	100
Backup protection maximum rating	fuse (gG)	[A]	≤ 160	≤ 160
	circuit breaker (B or C)	[A]	≤ 125	≤ 125
Pluggable cartridge			Yes	Yes
Integrated thermal disconnector			Yes	Yes
State indicator			Yes	Yes
Safety reserve			Yes	Yes
Auxiliary contact			Yes (TS option)	Yes (TS option)
Installation				
Wire range (L, N, PE)	solid wire	[mm²]	2.5 … 35	2.5 … 35
	stranded wire	[mm²]	2.5 … 25	2.5 … 25
Stripping length (L, N, PE)		[mm]	12.5	12.5
Tightening torque (L, N, PE)		[Nm]	2.8	2.8
Auxiliary contact (TS)				
Contacts information			1 NO - 1 NC	1 NO - 1 NC
Min. load			12 DC - 10 mA	12 DC - 10 mA
Max. load			250 V AC - 1A	250 V AC - 1A
Connection cross-section		[mm²]	1.5	1.5
Miscellanous characteristics				
Stocking and operating temperature		[°C]	-40 to +80	-40 to +80
Maximal Altitude		[m]	5000	5000
Degree of protection			IP 20 - Indoor	IP 20 - Indoor
Fire resistance according to UL 94			V-0	V-0
Dimensions				
height x width x depth		[mm]	88 x 53.4 x 76.7	88 x 106.8 x 76.7
		[inches]	3.46 x 2.1 x 3.02	3.46 x 4.2 x 3.02
Dimensions with auxilary contact (TS)				
height x width x depth		[mm]	95.8 x 53.4 x 76.7	95.8 x 106.8 x 76.7
		[inches]	3.77 x 2.1 x 3.02	3.77 x 4.2 x 3.02
Replacement Cartridges				
Phase Product ID			OVR T1-T2 12.5-275s C QS 2CTB815710R2600	OVR T1-T2 12.5-440s C QS 2CTB815710R5500

Protection and safety

OVR Type 1+2 surge protective devices TNC networks



Type 1+2 surge protective devices are designed to discharge high current surges without any destruction of the installation. These surge protective devices are characterized by their capacity to withstand impulse current with 10/350 µs wave form which simulate natural lightning current.
Type 1+2 ABB surge protective devices have a high impulse current withstand capacity with ensuring a low protection level (Up).
Type 1+2 SPDs can be installed at the entrance in the main switch board for a global protection of the electrical installation.

Poles	Impulse current Iimp 10/350	Max discharge current Imax 8/20	Voltage protection level Up	Nominal voltage Un	Max. cont. operating voltage Uc	Bbn 3660308	Order details		Weight 1 piece
	kA	kA	kV	V	V	EAN	Type code	Order code	kg
3	12.5	80	1.4	230/400	275	524911	OVR T1-T2 3L 12.5-275s P TS QS	2CTB815710R0600	0.45
3	12.5	80	1.4	230/400	275	524980	OVR T1-T2 3L 12.5-275s P QS	2CTB815710R1800	0.45
3	12.5	80	1.9	400/690	440	525086	OVR T1-T2 3L 12.5-440s P TS QS	2CTB815710R3500	0.90
3	12.5	80	2	400/690	440	525154	OVR T1-T2 3L 12.5-440s P QS	2CTB815710R4700	0.90

Protection and safety

OVR Type 1+2 surge protective devices TNS/TT 230 1Ph+N and 3Ph+N networks

Technical features

Types			**OVR T1-T2 1N 12.5-275s P QS**
with auxiliary contact (TS)			**OVR T1-T2 1N 12.5-275s P TS QS**
Technology			Varistor + GDT
Electrical features			
Standard			IEC 61643-11/EN 61643-11:2012/A11:2018
Type/test class			T1-T2/I - II
Protected lines			1+1
System network			TT - TNS
Type of current			AC 47-63 Hz
Voltage regulation of the system network			± 20 %
Nominal system voltage Un		[V]	230
Max. cont. operating voltage Uc		[V]	275
Maximum impulse current Iimp (10/350)		[kA]	12.5
Max.Imp current Tot Iimp (10/350)		[kA]	25
Nominal discharge current In (8/20)		[kA]	20
Maximal discharge current Imax (8/20) kA		[kA]	80
Follow current interrupting rating Ifi		[kA]	
Voltage protection level Up at In (L-N/N-PE/L-PE)		[kV]	1.4/1.4/1.5
Voltage protection level Ures at 3 kA		[kV]	0.5
TOV (Temporary overvoltage) withstand Ut (L-N: 5s./N-PE: 200ms)		[V]	337/1200
Response time		[ns]	≤ 25
Short-circuit withstand capability Isccr		[kA]	100
Backup protection maximum rating	fuse (gG)	[A]	≤ 160
	circuit breaker (B or C curve)	[A]	≤ 125
Pluggable cartridge			Yes
Integrated thermal disconnector			Yes
State indicator			Yes
Safety reserve			Yes
Auxiliary contact			Yes (TS option)
Installation			
Wire range (L, N, PE)	solid wire	[mm²]	2.5 ... 35
	stranded wire	[mm²]	2.5 ... 25
Stripping length (L, N, PE)		[mm]	12.5
Tightening torque (L, N, PE)		[Nm]	2.8
Auxiliary contact (TS)			
Contacts information			1 NO - 1 NC
Min. load			12 V DC - 10 mA
Max. load			250 V AC - 1A
Connection cross-section		[mm²]	1.5
Miscellanous characteristics			
Stocking and operating temperature		[°C]	-40 to +80
Maximal Altitude		[m]	5000
Degree of protection			IP 20 - Indoor
Fire resistance according to UL 94			V-0
Dimensions			
height x width x depth		[mm]	88 x 35.6 x 76.7
		[in]	3.46 x 1.4 x 3.02
Dimensions with auxilary contact (TS)			
height x width x depth		[mm]	95.8 x 35.6 x 76.7
		[in]	3.46 x 1.4 x 3.02
Replacement Cartridges			
Phase Product ID			OVR T1-T2 12.5-275s C QS 2CTB815710R2600
Neutral Product ID			OVR T1-T2 N 50-275s C QS 2CTB815710R2700

Protection and safety

OVR Type 1+2 surge protective devices TNS/TT 230 1Ph+N and 3Ph+N networks

OVR T1-T2 3N 12.5-275s P QS **OVR T1-T2 3N 12.5-275s P TS QS**	**OVR T1-T2 4L 12.5-275s P QS** **OVR T1-T2 4L 12.5-275s P TS QS**
Varistor + GDT	Varistor
IEC 61643-11/EN 61643-11:2012/A11:2018	IEC 61643-11/EN 61643-11:2012/A11:2018
T1-T2/I - II	T1-T2/I - II
3+1	3+N
TT - TNS	TNS
AC 47-63 Hz	AC 47-63 Hz
± 20%	± 20%
230/400	230/400
275	275
12.5	12.5
50	50
20	20
80	80
	-
1.4/1.4/1.5	2.8/1.4/1.4
0.5	0.5
337/1200	337/
≤ 25	≤ 25
100	100
≤ 160	≤ 160
≤ 125	≤ 125
Yes	Yes
Yes	Yes
Yes	Yes
Yes	Yes
Yes (TS option)	Yes (TS option)
2.5 ... 35	2.5 ... 35
2.5 ... 25	2.5 ... 25
12.5	12.5
2.8	2.8
1 NO - 1 NC	1 NO - 1 NC
12 V DC - 10 mA	12 V DC - 10 mA
250 V AC - 1A	250 V AC - 1A
1.5	1.5
-40 to +80	-40 to +80
5000	5000
IP 20 - Indoor	IP 20 - Indoor
V-0	V-0
88 x 71.2 x 76.7	88 x 71.2 x 76.7
3.46 x 2.8 x 3.02	3.46 x 2.8 x 3.02
95.8 x 71.2 x 76.7	95.8 x 71.2 x 76.7
3.77 x 2.8 x 3.02	3.77 x 2.8 x 3.02
OVR T1-T2 12.5-275s C QS 2CTB815710R2600	OVR T1-T2 12.5-275s C QS 2CTB815710R2600
OVR T1-T2 N 50-275s C QS 2CTB815710R2700	

Protection and safety

OVR Type 1+2 surge protective devices TNS/TT 400 V 1Ph+N and 3Ph+N networks

Technical features

Types			OVR T1-T2 1N 12.5-440s P QS	OVR T1-T2 3N 12.5-440s P QS	OVR T1-T2 4L 12.5-440s P QS
with auxiliary contact (TS)			**OVR T1-T2 1N 12.5-440s P TS QS**	**OVR T1-T2 3N 12.5-440s P TS QS**	**OVR T1-T2 4L 12.5-440s P TS QS**
Technology			Varistor + GDT	Varistor + GDT	Varistor
Electrical features					
Standard			IEC 61643-11/EN 61643-11:2012/A11:2018	IEC 61643-11/EN 61643-11:2012/A11:2018	IEC 61643-11/EN 61643-11:2012/A11:2018
Type/test class			T1-T2/I - II	T1-T2/I - II	T1-T2/I - II
Protected lines			1+1	3+1	4
System network			TT- TNS	TT- TNS	TNS
Type of current			AC 47-63 Hz	AC 47-63 Hz	AC 47-63 Hz
Voltage regulation of the system network			± 10%	± 10%	± 10%
Nominal system voltage Un		[V]	400	400/690	400/690
Max. cont. operating voltage Uc		[V]	440	440	440
Maximum impulse current Iimp (10/350)		[kA]	12.5	12.5	12.5
Max.Imp current Tot Iimp (10/350)		[kA]	25	50	50
Nominal discharge current In (8/20)		[kA]	20	20	20
Maximal discharge current Imax (8/20) kA		[kA]	80	80	80
Follow current interrupting rating Ifi		[kA]			
Voltage protection level Up at In (L-N/N-PE/L-PE)		[kV]	1.9/1.9/2	1.9/1.9/2	3.8/1.9/1.9
Voltage protection level Ures at 3 kA		[kV]	0.8	0.8	0.8
TOV (Temporary overvoltage) withstand Ut (L-N: 5s./N-PE: 200ms)		[V]	581/1200	581/1200	581/
Response time		[ns]	≤ 25	≤ 25	≤ 25
Short-circuit withstand capability Isccr		[kA]	100	100	100
Backup protection maximum rating	fuse (gG)	[A]	≤ 160	≤ 160	≤ 160
	circuit breaker (B or C curve)	[A]	≤ 125	≤ 125	≤ 125
Pluggable cartridge			Yes	Yes	Yes
Integrated thermal disconnector			Yes	Yes	Yes
State indicator			Yes	Yes	Yes
Safety reserve			Yes	Yes	Yes
Auxiliary contact			Yes (TS option)	Yes (TS option)	Yes (TS option)
Installation					
Wire range (L, N, PE)	solid wire	[mm²]	2.5 ... 35	2.5 ... 35	2.5 ... 35
	stranded wire	[mm²]	2.5 ... 25	2.5 ... 25	2.5 ... 25
Stripping length (L, N, PE)		[mm]	12.5	12.5	12.5
Tightening torque (L, N, PE)		[Nm]	2.8	2.8	2.8
Auxiliary contact (TS)					
Contacts information			1 NO - 1 NC	1 NO - 1 NC	1 NO - 1 NC
Min. load			12 V DC - 10 mA	12 V DC - 10 mA	12 V DC - 10 mA
Max. load			250 V AC - 1 A	250 V AC - 1 A	250 V AC - 1 A
Connection cross-section		[mm²]	1.5	1.5	1.5
Miscellanous characteristics					
Stocking and operating temperature		[°C]	-40 to +80	-40 to +80	-40 to +80
Maximal Altitude		[m]	5000	5000	5000
Degree of protection			IP 20 - Indoor	IP 20 - Indoor	IP 20 - Indoor
Fire resistance according to UL 94			V-0	V-0	V-0
Dimensions					
height x width x depth		[mm]	88 x 53.4 x 76.7	88 x 124.6 x 76.7	88 x 142.4 x 76.7
		[in]	3.46 x 2.1 x 3.02	3.46 x 4.91 x 3.02	3.46 x 5.61 x 3.02
Dimensions with auxilary contact (TS)					
height x width x depth		[mm]	95.8 x 53.4 x 76.7	95.8 x 124.6 x 76.7	95.8 x 142.4 x 76.7
		[in]	3.77 x 2.1 x 3.02	3.77 x 4.91 x 3.02	3.77 x 5.61 x 3.02
Replacement Cartridges					
Phase Product ID			OVR T1-T2 12.5-440s C QS 2CTB815710R5500	OVR T1-T2 12.5-440s C QS 2CTB815710R5500	OVR T1-T2 12.5-440s C QS 2CTB815710R5500
Neutral Product ID			OVR T1-T2 N 50-440s C QS 2CTB815710R5600	OVR T1-T2 N 50-440s C QS 2CTB815710R5600	

Protection and safety

OVR Type 1+2 surge protective devices TNS/TT 400 V 1Ph+N and 3Ph+N networks



OVR T1-T2 1N 12.5-440s P TS QS

Type 1+2 surge protective devices are designed to discharge high current surges without any destruction of the installation. These surge protective devices are characterized by their capacity to withstand impulse current with 10/350 µs wave form which simulate natural lightning current.
Type 1+2 ABB surge protective devices have a high impulse current withstand capacity with ensuring a low protection level (Up).
Type 1+2 SPDs can be installed at the entrance in the main switch board for a global protection of the electrical installation.

Poles	Impulse current Iimp 10/350	Max. discharge current Imax 8/20	Follow current interrupting rating Ifi	Voltage protection level Up	Nominal voltage Un	Max. cont. operating voltage Uc	Bbn 3660 308	Order details		Weight 1 piece
	kA	kA	kA	kV	V	V	EAN	Type code	Order code	kg
1+1	12.5	80	-	1.4	230	275	524966	OVR T1-T2 1N 12.5-275s P QS	2CTB815710R1300	0.30
1+1	12.5	80	-	1.4	230	275	524898	OVR T1-T2 1N 12.5-275s P TS QS	2CTB815710R0100	0.30
1+1	12.5	80	-	1.9	400	440	525130	OVR T1-T2 1N 12.5-440s P QS	2CTB815710R4200	0.45
1+1	12.5	80	-	1.9	400	440	525062	OVR T1-T2 1N 12.5-440s P TS QS	2CTB815710R3000	0.45
3+1	12.5	80	-	1.4	230/400	275	524997	OVR T1-T2 3N 12.5-275s P QS	2CTB815710R1900	0.60
3+1	12.5	80	-	1.4	230/400	275	524928	OVR T1-T2 3N 12.5-275s P TS QS	2CTB815710R0700	0.60
3+1	12.5	80	-	1.9	400/690	440	525161	OVR T1-T2 3N 12.5-440s P QS	2CTB815710R4800	1.05
3+1	12.5	80	-	1.9	400/690	440	525093	OVR T1-T2 3N 12.5-440s P TS QS	2CTB815710R3600	1.05
4	12.5	80	-	1.4	230/400	275	525017	OVR T1-T2 4L 12.5-275s P QS	2CTB815710R2300	0.60
4	12.5	80	-	1.4	230/400	275	524942	OVR T1-T2 4L 12.5-275s P TS QS	2CTB815710R1100	0.60
4	12.5	80	-	1.9	400/690	440	525185	OVR T1-T2 4L 12.5-440s P QS	2CTB815710R5200	1.20
4	12.5	80	-	1.9	400/690	440	525116	OVR T1-T2 4L 12.5-440s P TS QS	2CTB815710R4000	1.20

Protection and safety

OVR Type 2 surge protective devices non pluggable

Technical features

Types			OVR T2 20-275	OVR T2 40-275
with auxiliary contact (TS)			-	-
Technology			Varistor	Varistor
Electrical features				
Standard			IEC 61643-11/EN 61643-11	IEC 61643-11/EN 61643-11
Type/test class			T2/II	T2/II
Protected lines			1	1
Types of networks			TT(L-N)-TNS-TNC	TT(L-N)-TNS-TNC
Type of current			AC 47-63 Hz	AC 47-63 Hz
Voltage regulation of the system network			± 20 %	± 20 %
Nominal AC voltage Un		[V]	230	230
Max. cont. operating AC voltage Uc		[V]	275	275
Maximum discharge current Imax (8/20)		[kA]	20	40
Nominal discharge current In (8/20)		[kA]	5	20
Voltage protection level Up at In		[kV]	1.5	1.4
Voltage protection level Up at 3 kA		[kV]	0.9	0.9
TOV (Temporary overvoltage) withstand Ut (L-N: 5s/N-PE: 200ms)		[V]	337/-	337/-
Response time		[ns]	≤ 25	≤ 25
Residual current IPE		[µA]	≤110	≤110
Short-circuit withstand capability Isccr		[kA]	50	50
Backup protection maximum rating	fuse (gG)	[A]	≤ 50	≤ 50
	circuit breaker (B or C curve)	[A]	≤ 50	≤ 50
Pluggable cartridge			No	No
Integrated thermal disconnector			Yes	Yes
State indicator			Yes	Yes
Safety reserve			No	No
Auxiliary contact (TS)			No	No
Installation				
Wire range (L, N, PE)	solid wire	[mm²]	2.5…25	2.5…25
	stranded wire	[mm²]	2.5…16	2.5…16
Stripping length (L, N, PE)		[mm]	12.2	12.2
Tightening torque (L, N, PE)		[Nm]	2.5	2.5
Auxiliary contact (TS)				
Contact complement			–	–
Min. load			–	–
Max. load			–	–
Connection cross-section		[mm²]	–	–
Miscellanous characteristics				
Stocking and operating temperature		[°C]	-40 to +80	-40 to +80
Maximal Altitude		[m]	2000	2000
Degree of protection			IP 20	IP 20
Fire resistance according to UL 94			V-0	V-0
Dimensions				
height x width x depth		[mm]	85 x 17.8 x 64.8	85 x 17.8 x 64.8
		[in]	3.35 x 0.70 x 2.55	3.35 x 0.70 x 2.55

Protection and safety

OVR Type 2 surge protective devices non pluggable

Type 2 surge protective devices are designed to protect electric installations and sensitive equipment against indirect surges with ensuring a low protection level (Up). They are characterized by their capacity to safely discharge current with 8/20 µs wave form.

Type 2 non pluggable - Uc 275 V

Poles	Max discharge current Imax 8/20	Nominal discharge current In	Voltage protection level Up	Nominal voltage Un	Max. cont. operating voltage Uc	Bbn 3660308	Order details		Weight 1 piece
	kA	kA	kV	V	V	EAN	Type code	Order code	kg
1	20	5	1.5	230/400	275	514882	OVR T2 20-275	2CTB804200R0100	0.12
1	40	20	1.4	230/400	275	514103	OVR T2 40-275	2CTB804201R0100	0.12
1	20	5	1.5	230/400	275	519382	OVR T2 20-275 (x20)	2CTB804200R1100	0.12
1	40	20	1.4	230/400	275	519412	OVR T2 40-275 (x20)	2CTB804201R1100	0.12

Protection and safety

OVR Type 2 pluggable QuickSafe® surge protective devices
TNC 400 V networks

Technical features

Types			OVR T2 3L 40-440 P QS	OVR T2 3L 80-440s P QS
with auxiliary contact (TS)			OVR T2 3L 40-440 P TS QS	OVR T2 3L 80-440s P TS QS
Technology			Varistor	Varistor
Electrical features				
Standard			IEC 61643-11/EN 61643-11	IEC 61643-11/EN 61643-11
Type/test class			T2/II	T2/II
Protected lines			3	3
System network			TNC - IT (230)	TNC - IT (230)
Type of current			AC 47-63 Hz	AC 47-63 Hz
Voltage regulation of the system network			± 10%	± 10%
Nominal system voltage Un (L-PEN/L-L)		[V]	400/690	400/690
Max. cont. operating voltage Uc		[V]	440	440
Nominal dc voltage Un dc L-PE/Un dc L-L		[V dc]	495/990	-
Max. dc. cont. operating voltage Ucdc L-PE/Ucdc L-L		[V dc]	545/1090	-
Maximum discharge current Imax (8/20)		[kA]	40	80
Maximum impulse current Iimp (10/350)		[kA]	2	6.25
Nominal discharge current In (8/20)		[kA]	20	20
Voltage protection level Up at In (L-PE)		[kV]	1.8	2.1
Voltage protection level Ures at 3kA		[kV]	1.25	1.25
Voltage protection level Ures at 5kA		[kV]	1.35	1.35
Voltage protection level Ures at 10kA		[kV]	1.55	1.55
TOV (Temporary overvoltage) withstand Ut (L-N: 5s./N-PE: 200ms)		[V]	581/	581/-
Response time		[ns]	< 25	< 25
Short-circuit withstand capability Isccr		[kA]	100	100
Backup protection maximum rating	fuse (gG)	[A]	≤ 125	≤ 160
	circuit breaker (B or C curve)	[A]	≤ 125	≤ 126
Pluggable cartridge			Yes	Yes
Integrated QuickSafe® technology			Yes	Yes
State indicator			Yes	Yes
Safety reserve			No	Yes
Auxiliary contact			Yes (TS option)	Yes (TS option)
Installation				
Wire range (L, N, PE)	solid wire	[mm²]	2.5 ... 35	2.5 ... 35
	stranded wire	[mm²]	2.5 ... 25	2.5 ... 25
Stripping length (L, N, PE)		[mm]	2.8	2.8
Tightening torque (L, N, PE)		[Nm]		
Auxiliary contact (TS)			1 NO - 1 NC	1 NO - 1 NC
Contacts information			12 DC - 10 mA	12 DC - 10 mA
Min. load			250 V AC - 1A	250 V AC - 1A
Max. load			1.5	1.5
Connection cross-section		[mm²]		
Miscellanous characteristics				
Stocking and operating temperature		°C	-40 to +80	-40 to +80
Maximal Altitude		[m]	5000	5000
Degree of protection			IP 20	IP 20
Fire resistance according to UL 94			V-0	V-0
Dimensions				

Protection and safety

OVR Type 2 pluggable QuickSafe® surge protective devices
TNC 400 V networks

Technical features

Types		OVR T2 3L 40-440 P QS	OVR T2 3L 80-440s P QS
with auxiliary contact (TS)		**OVR T2 3L 40-440 P TS QS**	**OVR T2 3L 80-440s P TS QS**
height x width x depth	mm	88 x 53.4 x 65.3	88 x 53.4 x 76.7
	inches	3.46 x 2.1 x 2.57	3.46 x 2.1 x 3.02
With Auxiliary Contact (TS)			
height x width x depth	mm	95.8 x 53.4 x 65.3	95.8 x 53.4 x 76.7
	inches	3.77 x 2.1 x 2.57	3.77 x 2.1 x 3.02
Replacement Cartridges			
Phase Product ID		OVR T2 40-440 C QS 2CTB803876R0400	OVR T2 80-440s C QS 2CTB815708R5500
Neutral Product ID		-	-



OVR T2 3L 40-440 P QS

Type 2 surge protective devices are designed to protect electric installations and sensitive equipment against indirect surges with ensuring a low protection level (Up). They are characterized by their capacity to safely discharge current with 8/20 µs wave form.

Poles	Max discharge current Imax 8/20	Nominal discharge current In	Voltage protection level Up	Nominal voltage Un	Max. cont. operating voltage Uc	Bbn 3660308	Order details		Weight 1 piece
	kA	kA	kV	V	V	EAN	Type code	Order code	kg
3	40	20	1.8	400	440	519894	OVR T2 3L 40-440 P QS	2CTB803873R5100	0.45
3	40	20	1.8	400	440	519900	OVR T2 3L 40-440 P TS QS	2CTB803873R5300	0.45
3	80	20	2.1	400	440	525598	OVR T2 3L 80-440s P TS QS	2CTB815708R4000	0.45
3	80	20	2.1	400	440	525635	OVR T2 3L 80-440s P QS	2CTB815708R5200	0.45

5

Protection and safety

OVR Type 2 pluggable QuickSafe® surge protective devices Single pole 230 V networks

Technical features

Types			OVR T2 40-275 P QS	OVR T2 40-275s P QS
with auxiliary contact (TS)			OVR T2 40-275 P TS QS	OVR T2 40-275s P TS QS
Technology			Varistor	Varistor
Electrical features				
Standard			IEC 61643-11/EN 61643-11:2012/A11:2018	IEC 61643-11/EN 61643-11:2012/A11:2018
Type/test class			T2/II	T2/II
Protected lines			1	1
System network			TT(L-N)-TNS-TNC	TT(L-N)-TNS-TNC
Type of current			AC 47-63 Hz	AC 47-63 Hz
Voltage regulation of the system network			± 20%	± 20%
Nominal system voltage Un		[V]	230	230
Max. cont. operating voltage Uc		[V]	275	275
Nominal dc voltage Un dc L-PE		[V dc]	320	-
Max. dc. cont. operating voltage Ucdc L-PE		[V dc]	355	-
Maximum discharge current Imax (8/20)		[kA]	40	40
Maximum impulse current Iimp (10/350)		[kA]	2	2
Nominal discharge current In (8/20)		[kA]	20	20
Voltage protection level Up at In (L-N/N-PE/L-PE)		[kV]	1.25/-/1.25	1.4/-/1.4
Voltage protection level Ures at 3kA (L-N)		[kV]	0.8	0.5
Voltage protection level Ures at 5kA (L-N)		[kV]	0.85	0.7
Voltage protection level Ures at 10kA (L-N)		[kV]	1	0.9
TOV (Temporary overvoltage) withstand Ut (L-N: 5s./N-PE: 200ms)		[V]	337/-	337/-
Response time		[ns]	≤ 25	≤ 25
Short-circuit withstand capability Isccr		[kA]	100	100
Backup protection maximum rating	fuse (gG)	[A]	≤ 125	≤ 160
	circuit breaker (B or C curve)	[A]	≤ 125	≤ 125
Pluggable cartridge			Yes	Yes
Integrated QuickSafe® technology			Yes	Yes
State indicator			Yes	Yes
Safety reserve			No	Yes
Auxiliary contact			Yes (TS option)	Yes (TS option)
Installation				
Wire range (L, N, PE)	solid wire	[mm²]	2.5 ... 35	2.5 ... 35
	stranded wire	[mm²]	2.5 ... 25	2.5 ... 25
Stripping length (L, N, PE)		[mm]	12.5	12.5
Tightening torque (L, N, PE)		[Nm]	2.8	2.8
Auxiliary contact (TS)				
Contacts information			1 NO - 1 NC	1 NO - 1 NC
Min. load			12 V DC - 10 mA	12 V DC - 10 mA
Max. load			250 V AC - 1 A	250 V AC - 1 A
Connection cross-section		[mm²]	1.5	1.5
Miscellanous characteristics				
Stocking and operating temperature		[°C]	-40 to +80	-40 to +80
Maximal Altitude		[m]	5000	5000
Degree of protection			IP 20	IP 20
Fire resistance according to UL 94			V0	V0
Dimensions				
height x width x depth		[mm]	88 x 17.8 x 65.3	88 x 17.8 x 76.7
		[inches]	3.46 x 0.7 x 2.57	3.46 x 0.7 x 3.02
With Auxiliary Contact (TS)				
height x width x depth		[mm]	95.8 x 17.8 x 65.3	95.8 x 17.8 x 76.7
		[inches]	3.77 x 0.7 x 2.57	3.77 x 0.7 x 3.02
Replacement Cartridges				
Phase Product ID			OVR T2 40-275 C QS 2CTB803876R1000	OVR T2 40-275s C QS 2CTB815704R2600
Neutral Product ID			-	-

Protection and safety

OVR Type 2 pluggable QuickSafe® surge protective devices Single pole 230 V networks

OVR T2 40-350 P QS OVR T2 40-350 P TS QS	OVR T2 80-275s P QS OVR T2 80-275s P TS QS	OVR T2-T3 N 80-275 P QS	OVR T2 N 80-350 P QS	OVR T2 N 80-275s P QS
Varistor	Varistor	GDT	GDT	GDT
IEC 61643-11/EN 61643-11:2012/A11:2018	IEC 61643-11/EN 61643-11:2012/A11:2018	IEC 61643-11/EN 61643-11:2012/A11:2018	IEC 61643-11/EN 61643-11:2012/A11:2018	IEC 61643-11/EN 61643-11:2012/A11:2018
T2/II	T2/II	T2-T3/II-III	T2/II	T2
1	1	1	1	1
TT(L-N)-TNS-TNC	TT(L-N)-TNS-TNC	TT (N-PE)-TNS(N-PE)	TT (N-PE)-TNS(N-PE)	TT(N-PE)-TNS(N-PE)
AC 47-63 Hz	AC 47-63 Hz	AC 47-63 Hz	AC 47-63 Hz	AC 47-63 Hz
± 50%	± 20%	± 20%	± 50%	± 20%
230	230	230	230	230
350	275	275	350	275
375	-	-	-	-
415	-	-	-	-
40	80	80	80	80
2	6.25	2	2	6.25
20	20	30	30	30
1.5/-/1.5	1.4/-/1.4	-/1.4/-	-/1.4/-	-/1.4/-
1	0.5	-	-	-
1.05	0.7	-	-	-
1.2	0.9	-	-	-
455/-	337/	-/1200	-/1200	-/1200
≤ 25	≤ 25	< 25	< 25	< 25
100	100	-	-	100
≤ 125	≤ 160	≤ 125	≤ 125	≤160
≤ 125	≤ 125	≤ 125	≤ 125	≤125
Yes	Yes	Yes	Yes	Yes
Yes	Yes	-	-	-
Yes	Yes	No	No	No
No	Yes	No	No	No
Yes (TS option)	Yes (TS option)	No	No	No
2.5 ... 35	2.5 ... 35	2.5 ... 35	2.5 ... 35	2.5 ... 35
2.5 ... 25	2.5 ... 25	2.5 ... 25	2.5 ... 25	2.5 ... 25
12.5	12.5	12.5	12.5	15
2.8	2.8	2.8	2.8	3.5
1 NO- 1 NC	1 NO- 1 NC	-	-	-
12 V DC - 10 mA	12 V DC - 10 mA	-	-	-
250 V AC - 1 A	250 V AC - 1 A	-	-	-
1.5	1.5	-	-	-
-40 to +80	-40 to +80	-40 to +80	-40 to +80	-40 to +80
5000	5000	5000	5000	5000
IP 20	IP 20 - Indoor	IP 20 - Indoor	IP 20 - Indoor	IP 20 - Indoor
V0	V-0	V-0	V-0	V0
88 x 17.8 x 65.3	88 x 17.8 x 76.7	88 x 17.8 x 65.3	88 x 17.8 x 65.3	88 x 17.8 x 76.7
3.46 x 0.7 x 2.57	3.46 x 0.7 x 3.02	3.46 x 0.7 x 3.02	3.46 x 0.7 x 3.02	3.45 x 0.7 x 3.02
95.8 x 17.8 x 65.3	95.8 x 17.8 x 76.7	-	-	-
3.77 x 0.7 x 2.57	3.77 x 0.7 x 3.02	-	-	-
OVR T2 40-350 C QS 2CTB803886R1000	OVR T2 80-275s C QS 2CTB815708R2600	-	-	-
-	-	OVR T2-T3 N 80-275 C QS 2CTB803876R0000	OVR T2 N 80-350 C QS 2CTB803886R0000	OVR T2 N 80-275s C QS 2CTB815708R2800

Protection and safety

OVR Type 2 pluggable QuickSafe® surge protective devices Single pole 230 V networks



OVR T2 40-275 P QS

Type 2 surge protective devices are designed to protect electric installations and sensitive equipment against indirect surges with ensuring a low protection level (Up). They are characterized by their capacity to safely discharge current with 8/20 µs wave form.

Type 2 pluggable

Poles	Max discharge current Imax 8/20	Nominal discharge current In	Voltage protection level Up	Nominal voltage Un	Max. cont. operating voltage Uc	Bbn 3660308	Order details		Weight 1 piece
	kA	kA	kV	V	V	EAN	Type code	Order code	kg
1	40	20	1.25	230	275	519580	OVR T2 40-275 P QS	2CTB803871R2300	0.12
1	40	20	1.25	230	275	519597	OVR T2 40-275 P TS QS	2CTB803871R1700	0.12
1	40	20	1.4	230	275	525291	OVR T2 40-275s P QS	2CTB815704R1200	0.15
1	40	20	1.4	230	275	525222	OVR T2 40-275s P TS QS	2CTB815704R0000	0.15
1	40	20	1.5	230	350	520609	OVR T2 40-350 P QS	2CTB803881R2300	0.12
1	40	20	1.5	230	350	520562	OVR T2 40-350 P TS QS	2CTB803881R1700	0.12
1	80	20	1.4	230	275	525475	OVR T2 80-275s P QS	2CTB815708R1200	0.15
1	80	20	1.4	230	275	525406	OVR T2 80-275s P TS QS	2CTB815708R0000	0.15
1	80	30	1.4	230	275	519658	OVR T2 N 80-350 P QS	2CTB803983R1900	0.12
1	80	30	1.4	230	275	519641	OVR T2-T3 N 80-275 P QS	2CTB803973R1900	0.12
1	80	30	1.4	230	275	525536	OVR T2 N 80-275s P QS	2CTB815708R2500	0.12

Notes

Protection and safety

OVR Type 2 pluggable QuickSafe® surge protective devices Single pole 400 V networks

Technical features

Types			OVR T2 40-440 P QS	OVR T2 40-440s P QS
with auxiliary contact (TS)			**OVR T2 40-440 P TS QS**	**OVR T2 40-440s P TS QS**
Technology			Varistor	Varistor
Electrical features				
Standard			IEC 61643-11/EN 61643-11:2012/A11:2018	IEC 61643-11/EN 61643-11:2012/A11:2018
Type/test class			T2/II	T2/II
Protected lines			1	1
System network			TNC - TT(L-N) - TNS - IT (230 V)	TNC - TT(L-N) - TNS - IT (230 V)
Type of current			AC 47-63 Hz	AC 47-63 Hz
Voltage regulation of the system network			± 10%	± 10%
Nominal system voltage Un		[V]	400	400
Max. cont. operating voltage Uc		[V]	440	440
Nominal dc voltage Un dc L-PE		[V dc]	495	-
Max. dc. cont. operating voltage Ucdc L-PE		[V dc]	545	-
Maximum discharge current Imax (8/20)		[kA]	40	40
Maximum impulse current Iimp (10/350)		[kA]	2	2
Nominal discharge current In (8/20)		[kA]	20	20
Voltage protection level Up at In (L-N/N-PE/L-PE)		[kV]	1.8/-/1.8	1.8/-/1.8
Voltage protection level Ures at 3kA (L-N)		[kV]	1.25	0.8
Voltage protection level Ures at 5kA (L-N)		[kV]	1.35	1.2
Voltage protection level Ures at 10kA (L-N)		[kV]	1.55	1.55
TOV (Temporary overvoltage) withstand Ut (L-N: 5s./N-PE: 200ms)		[V]	581/-	581/-
Uoc		[kV]	-	-
Response time		[ns]	≤ 25	≤ 25
Short-circuit withstand capability Isccr		[kA]	100	100
Backup protection maximum rating	fuse (gG)	[A]	≤ 125	≤ 160
	circuit breaker (B or C curve)	[A]	≤ 125	≤ 125
Pluggable cartridge			Yes	Yes
Integrated QuickSafe® technology			Yes	Yes
State indicator			Yes	Yes
Safety reserve			No	Yes
Auxiliary contact			Yes (TS option)	Yes (TS option)
Installation				
Wire range (L, N, PE)	solid wire	[mm²]	2.5 ... 35	2.5 ... 35
	stranded wire	[mm²]	2.5 ... 25	2.5 ... 25
Stripping length (L, N, PE)		[mm]	12.5	12.5
Tightening torque (L, N, PE)		[Nm]	2.8	2.8
Auxiliary contact (TS)				
Contacts information			1 NO - 1 NC	1 NO - 1 NC
Min. load			12 V DC - 10 mA	12 V DC - 10 mA
Max. load			250 V AC - 1 A	250 V AC - 1A

Protection and safety

OVR Type 2 pluggable QuickSafe® surge protective devices Single pole 400 V networks

OVR T2 80-440s P QS **OVR T2 80-440s P TS QS**	**OVR T2-T3 N 80-440 P QS**	**OVR T2 N 80-440s P QS**
Varistor	GDT	GDT
IEC 61643-11/EN 61643-11:2012/A11:2018	IEC 61643-11/EN 61643-11:2012/A11:2018	IEC 61643-11/EN 61643-11:2012/A11:2018
T2/II	T2-T3/II-III	T2
1	1	1
TNC -TT(L-N) - TNS - IT (230 V)	TT (N-PE)-TNS(N-PE)	TT(N-PE)-TNS(N-PE)
AC 47-63 Hz	AC 47-63 Hz	AC 47-63 Hz
± 10%	± 10%	± 10%
400	400	400
440	440	440
-	-	-
-	-	-
80	80	80
6.25	2	6.25
20	30	30
1.8/-/1.8	-/1.4/-	-/2/-
0.8	-	-
1.2	-	-
-	-	-
581/-	-/1200	-/1200
-	-	
≤ 25	< 25	< 25
100	-	100
≤ 160	≤ 125	≤ 160 A
≤ 125	≤ 125	≤ 160 A
Yes	Yes	No
Yes	Yes	-
Yes	Yes	No
Yes	No	No
Yes (TS option)	No	No
2.5 ... 35	2.5 ... 35	2.5 ... 35
2.5 ... 25	2.5 ... 25	2.5 ... 25
12.5	12.5	15
2.8	2.8	3.5
1 NO - 1 NC	-	-
12 V DC - 10 mA	-	-
250 V AC - 1A	-	-

Protection and safety

OVR Type 2 pluggable QuickSafe® surge protective devices Single pole 400 V networks

Technical features

Types		OVR T2 40-440 P QS	OVR T2 40-440s P QS
with auxiliary contact (TS)		**OVR T2 40-440 P TS QS**	**OVR T2 40-440s P TS QS**
Connection cross-section	[mm²]	1.5	1.5
Miscellanous characteristics			
Stocking and operating temperature	[°C]	-40 to +80	-40 to +80
Maximal Altitude	[m]	5000	5000
Degree of protection		IP 20	IP 20
Fire resistance according to UL 94		V0	V-0
Dimensions of packing			
height x width x depth	[mm]	88 x 17.8 x 65.3	88 x 17.8 x 76.7
	[inches]	3.46 x 0.7 x 2.57	3.46 x 0.7 x 3.02
With Auxiliary Contact (TS)			
height x width x depth	[mm]	95.8 x 17.8 x 65.3	95.8 x 17.8 x 76.7
	[inches]	3.77 x 0.7 x 2.57	3.77 x 0.7 x 3.02
Replacement Cartridges			
Phase Product ID		OVR T2 40-440 C 2CTB803876R0400	OVR T2 40-440s C QS 2CTB815704R5500
Neutral Product ID		-	-

Protection and safety

OVR Type 2 pluggable QuickSafe® surge protective devices Single pole 400 V networks

OVR T2 80-440s P QS	OVR T2-T3 N 80-440 P QS	OVR T2 N 80-440s P QS
OVR T2 80-440s P TS QS		
1.5		1.5
-40 to +80	-40 to +80	-40 to +80
5000	5000	5000
IP 20	IP 20	IP 20
V-0	V-0	V0
88 x 17.8 x 76.7	88 x 17.8 x 65.3	88 x 17.8 x 76
3.46 x 0.7 x 3.02	3.46 x 0.7 x 2.57	3.46 x 0.7 x 2.99
95.8 x 17.8 x 76.7		
3.77 x 0.7 x 3.02		
OVR T2 80-440s C QS 2CTB815708R5500	-	
-	OVR T2-T3 N 80-440 C QS 2CTB803886R0100	OVR T2 N 80-440s C QS 2CTB815708R2800

Type 2 surge protective devices are designed to protect electric installations and sensitive equipment against indirect surges with ensuring a low protection level (Up). They are characterized by their capacity to safely discharge current with 8/20 µs wave form.

Type 2 pluggable

Poles	Max discharge current Imax 8/20	Nominal discharge current In	Voltage protection level Up	Nominal voltage Un	Max. cont. operating voltage Uc	Bbn 3660308	Order details		Weight 1 piece
	kA	kA	kV	V	V	EAN	Type code	Order code	kg
1	40	20	1.8	400	440	519627	OVR T2 40-440 P QS	2CTB803871R1200	0.12
1	40	20	2	400	440	519634	OVR T2 40-440 P TS QS	2CTB803871R0500	0.12
1	40	20	1.8	400	440	525338	OVR T2 40-440s P QS	2CTB815704R4100	0.30
1	40	20	1.8	400	440	525369	OVR T2 40-440s P TS QS	2CTB815704R2900	0.30
1	80	20	1.8	400	440	525567	OVR T2 80-440s P QS	2CTB815708R4100	0.30
1	80	20	1.8	400	440	525567	OVR T2 80-440s P TS QS	2CTB815708R2900	0.30
1	80	30	1.4	400	440	519665	OVR T2-T3 N 80-440 P QS	2CTB803973R2000	0.12
1	80	30	2	400	440	525642	OVR T2 N 80-440s P QS	2CTB815708R5400	0.12

Protection and safety

OVR Type 2 pluggable QuickSafe® surge protective devices
TNC 230 V networks

Technical features

Types			OVR T2 3L 40-275 P QS	OVR T2 3L 40-275s P QS	OVR T2 3L 80-275s P QS	OVR T2 3L 40-350 P QS
with auxiliary contact (TS)			OVR T2 3L 40-275 P TS QS	OVR T2 3L 40-275s P TS QS	OVR T2 3L 80-275s P TS QS	OVR T2 3L 40-350 P TS QS
Technology			Varistor	Varistor	Varistor	Varistor
Electrical features						
Standard			IEC 61643-11/ EN 61643-11:2012/ A11:2018	IEC 61643-11/ EN 61643-11:2012/ A11:2018	IEC 61643-11/ EN 61643-11:2012/ A11:2018	IEC 61643-11/ EN 61643-11:2012/ A11:2018
Type/test class			T2/II	T2/II	T2/II	T2/II
Protected lines			3	3	3	3
System network			TNC	TNC	TNC	TNC
Type of current			AC 47-63 Hz	AC 47-63 Hz	AC 47-63 Hz	AC 47-63 Hz
Voltage regulation of the system network			± 20%	± 20%	± 20%	± 50%
Nominal system voltage Un (L-PEN/L-L)		[V]	230/400	230/400	230/400	230/400
Max. cont. operating voltage Uc		[V]	275	275	275	350
Nominal dc voltage Un dc L-PE/Un dc L-L		[V dc]	320/640	-	-	375/750
Max. dc. cont. operating voltage Ucdc L-PE/Ucdc L-L		[V dc]	355/710	-	-	415/830
Maximum discharge current Imax (8/20)		[kA]	40	40	80	40
Maximum impulse current Iimp (10/350)		[kA]	2	2	6.25	2
Nominal discharge current In (8/20)		[kA]	20	20	20	20
Voltage protection level Up at In (L-PE)		[kV]	1.25	1.4	1.4	1.5
Voltage protection level Ures at 3kA		[kV]	0.8	0.5	0.5	1.0
Voltage protection level Ures at 5kA		[kV]	0.85	0.7	0.7	1.05
Voltage protection level Ures at 10kA		[kV]	1.0	0.9	0.9	1.2
TOV (Temporary overvoltage) withstand Ut (L-N: 5s./N-PE: 200ms)		[V]	337/-	337/-	337/-	455/-
Uoc		[kV]	-	-	-	-
Response time		[ns]	≤ 25	≤ 25	≤ 25	≤ 25
Short-circuit withstand capability Isccr		[kA]	100	100	100	100
Backup protection maximum rating	fuse (gG)	[A]	≤ 125	≤ 160	≤ 160	≤ 125
	circuit breaker (B or C curve)	[A]	≤ 125	≤ 125	≤ 125	≤ 125
Pluggable cartridge			Yes	Yes	Yes	Yes
Integrated QuickSafe® technology			Yes	Yes	Yes	Yes
State indicator			Yes	Yes	Yes	Yes
Safety reserve			No	Yes	Yes	No
Auxiliary contact			Yes (TS option)	Yes (TS option)	Yes (TS option)	Yes (TS option)
Installation						
Wire range (L, N, PE)	solid wire	[mm²]	2.5 ... 35	2.5 ... 35	2.5 ... 35	2.5 ... 35
	stranded wire	[mm²]	2.5 ... 25	2.5 ... 25	2.5 ... 25	2.5 ... 25
Stripping length (L, N, PE)		[mm]	12.5	12.5	12.5	12.5
Tightening torque (L, N, PE)		[Nm]	2.8	2.8	2.8	2.8
Auxiliary contact (TS)						
Contacts information			1 NO - 1 NC	1 NO - 1 NC	1 NO - 1 NC	1 NO - 1 NC
Min. load			12 DC - 10 mA	12 DC - 10 mA	12 DC - 10 mA	12 DC - 10 mA
Max. load			250 V AC - 1A	250 V AC - 1A	250 V AC - 1A	250 V AC - 1A
Connection cross-section		[mm²]	1.5	1.5	1.5	1.5
Miscellanous characteristics						
Stocking and operating temperature		[°C]	-40 to +80	-40 to +80	-40 to +80	-40 to +80
Maximal Altitude		[m]	5000	5000	5000	5000
Degree of protection			IP 20	IP 20	IP 20	IP 20
Fire resistance according to UL 94			V0	V-0	V-0	V0

Protection and safety

OVR Type 2 surge protective devices TNC 230 V networks, pluggable and non-pluggable versions

Technical features

Types		OVR T2 3L 80-275s P QS	OVR T2 3L 40-350 P QS
with auxiliary contact (TS)		OVR T2 3L 80-275s P TS QS	OVR T2 3L 40-350 P TS QS
Dimensions			
height x width x depth	[mm]	88 x 53.4 x 76.7	85 x 53.4 x 64.8
	[inches]	3.46 x 2.1 x 3.02	3.35 x 2.10 x 2.55
With Auxiliary Contact (TS)			
height x width x depth	[mm]	95.8 x 53.4 x 76.7	96 x 53.4 x 64.8
	[inches]	3.77 x 2.1 x 3.02	3.78 x 2.10 x 2.55
Replacement Cartridges			
Phase Product ID		OVR T2 80-275s C QS 2CTB8157084R2600	OVR T2 40-350 C QS 2CTB803886R1000
Neutral Product ID		-	-



OVR T2 3L 40-275 P QS

Type 2 surge protective devices are designed to protect electric installations and sensitive equipment against indirect surges with ensuring a low protection level (Up). They are characterized by their capacity to safely discharge current with 8/20 µs wave form.

Type 2 pluggable

Poles	Max discharge current Imax 8/20	Nominal discharge current In	Voltage protection level Up	Nominal voltage Un	Max. cont. operating voltage Uc	Bbn 3660308	Order details		Weight 1 piece
	kA	kA	kV	V	V	EAN	Type code	Order code	kg
3	40	20	1.25	230/400	275	519825	OVR T2 3L 40-275 P QS	2CTB803873R2400	0.36
3	40	20	1.25	230/400	275	519832	OVR T2 3L 40-275 P TS QS	2CTB803873R2500	0.36
3	40	20	1.4	230/400	275	525253	OVR T2 3L 40-275s P TS QS	2CTB815704R0600	0.45
3	40	20	1.4	230/400	275	525314	OVR T2 3L 40-275s P QS	2CTB815704R1800	0.45
3	80	20	1.4	230/400	275	525437	OVR T2 3L 80-275s P TS QS	2CTB815708R0600	0.45
3	80	20	1.4	230/400	275	525499	OVR T2 3L 80-275s P QS	2CTB815708R1800	0.45
3	40	20	1.5	230/400	350	519849	OVR T2 3L 40-350 P QS	2CTB803883R2400	0.36
3	40	20	1.5	230/400	350	519856	OVR T2 3L 40-350 P TS QS	2CTB803883R2500	0.36

Protection and safety

OVR Type 2 pluggable QuickSafe® surge protective devices TNC 400 V networks

Technical features

Types			OVR T2 3L 40-440 P QS	OVR T2 3L 80-440s P QS
with auxiliary contact (TS)			OVR T2 3L 40-440 P TS QS	OVR T2 3L 80-440s P TS QS
Technology			Varistor	Varistor
Electrical features				
Standard			IEC 61643-11/EN 61643-11:2012/A11:2018	IEC 61643-11/EN 61643-11:2012/A11:2018
Type/test class			T2/II	T2/II
Protected lines			3	3
System network			TNC - IT (230)	TNC - IT (230)
Type of current			AC 47-63 Hz	AC 47-63 Hz
Voltage regulation of the system network			± 10%	± 10%
Nominal system voltage Un (L-PEN/L-L)		[V]	400/690	400/690
Max. cont. operating voltage Uc		[V]	440	440
Nominal dc voltage Un dc L-PE/Un dc L-L		[V dc]	495/990	-
Max. dc. cont. operating voltage Ucdc L-PE/Ucdc L-L		[V dc]	545/1090	-
Maximum discharge current Imax (8/20)		[kA]	40	80
Maximum impulse current Iimp (10/350)		[kA]	2	6.25
Nominal discharge current In (8/20)		[kA]	20	20
Voltage protection level Up at In (L-PE)		[kV]	1.8	2.1
Voltage protection level Ures at 3kA		[kV]	1.25	1.25
Voltage protection level Ures at 5kA		[kV]	1.35	1.35
Voltage protection level Ures at 10kA		[kV]	1.55	1.55
TOV (Temporary overvoltage) withstand Ut (L-N: 5s./N-PE: 200ms)		[V]	581/	581/-
Response time		[ns]	< 25	< 25
Short-circuit withstand capability Isccr		[kA]	100	100
Backup protection maximum rating	fuse (gG)	[A]	≤ 125	≤ 160
	circuit breaker (B or C curve)	[A]	≤ 125	≤ 126
Pluggable cartridge			Yes	Yes
Integrated QuickSafe® technology			Yes	Yes
State indicator			Yes	Yes
Safety reserve			No	Yes
Auxiliary contact			Yes (TS option)	Yes (TS option)
Installation				
Wire range (L, N, PE)	solid wire	[mm²]	2.5 ... 35	2.5 ... 35
	stranded wire	[mm²]	2.5 ... 25	2.5 ... 25
Stripping length (L, N, PE)		[mm]	2.8	2.8
Tightening torque (L, N, PE)		[Nm]		
Auxiliary contact (TS)			1 NO - 1 NC	1 NO - 1 NC
Contacts information			12 DC - 10 mA	12 DC - 10 mA
Min. load			250 V AC - 1A	250 V AC - 1A
Max. load			1.5	1.5
Connection cross-section		[mm²]		
Miscellanous characteristics				
Stocking and operating temperature		°C	-40 to +80	-40 to +80
Maximal Altitude		[m]	5000	5000
Degree of protection			IP 20	IP 20
Fire resistance according to UL 94			V-0	V-0
Dimensions				

Protection and safety

OVR Type 2 pluggable QuickSafe® surge protective devices
TNC 400 V networks

Technical features

Types		OVR T2 3L 40-440 P QS	OVR T2 3L 80-440s P QS
with auxiliary contact (TS)		**OVR T2 3L 40-440 P TS QS**	**OVR T2 3L 80-440s P TS QS**
height x width x depth	mm	88 x 53.4 x 65.3	88 x 53.4 x 76.7
	inches	3.46 x 2.1 x 2.57	3.46 x 2.1 x 3.02
With Auxiliary Contact (TS)			
height x width x depth	mm	95.8 x 53.4 x 65.3	95.8 x 53.4 x 76.7
	inches	3.77 x 2.1 x 2.57	3.77 x 2.1 x 3.02
Replacement Cartridges			
Phase Product ID		OVR T2 40-440 C QS 2CTB803876R0400	OVR T2 80-440s C QS 2CTB815708R5500
Neutral Product ID		-	-



OVR T2 3L 40-440 P QS

Type 2 surge protective devices are designed to protect electric installations and sensitive equipment against indirect surges with ensuring a low protection level (Up). They are characterized by their capacity to safely discharge current with 8/20 µs wave form.

Poles	Max discharge current Imax 8/20	Nominal discharge current In	Voltage protection level Up	Nominal voltage Un	Max. cont. operating voltage Uc	Bbn 3660308	Order details		Weight 1 piece
	kA	kA	kV	V	V	EAN	Type code	Order code	kg
3	40	20	1.8	400	440	519894	OVR T2 3L 40-440 P QS	2CTB803873R2800	0.45
3	40	20	1.8	400	440	519900	OVR T2 3L 40-440 P TS QS	2CTB803873R2700	0.45
3	80	20	2.1	400	440	525598	OVR T2 3L 80-440s P TS QS	2CTB815708R3500	0.45
3	80	20	2.1	400	440	525635	OVR T2 3L 80-440s P QS	2CTB815708R4700	0.45

Protection and safety

OVR Type 2 pluggable QuickSafe® surge protective devices
TNS 230 V networks

Technical features

Types			OVR T2 4L 40-275 P QS	OVR T2 4L 40-275s P QS	OVR T2 4L 80-275s P QS
with auxiliary contact (TS)			**OVR T2 4L 40-275 P TS QS**	**OVR T2 4L 40-275s P TS QS**	**OVR T2 4L 80-275s P TS QS**
Technology			Varistor	Varistor	Varistor
Electrical features					
Standard			IEC 61643-11/ EN 61643-11:2012/A11:2018	IEC 61643-11/ EN 61643-11:2012/A11:2018	IEC 61643-11/ EN 61643-11:2012/A11:2018
Type/test class			T2/II	T2/II	T2/II
Protected lines			4	4	4
Types of networks			TNS	TNS	TNS
Type of current			AC 47-63 Hz	AC 47-63 Hz	AC 47-63 Hz
Voltage regulation of the system network			± 20%	± 20%	± 20%
Nominal voltage Un (L-N/L-L)		[V]	230/400	230/400	230/400
Max. cont. operating AC voltage Uc		[V]	275	275	275
Nominal dc voltage Un dc L-PE/Un dc L-L		V dc	320/640	-	-
Max. dc. cont. operating voltage Ucdc L-PE/ Ucdc L-L		V dc	355/710	-	-
Maximum discharge current Imax (8/20)		[kA]	40	40	80
Nominal discharge current In (8/20)		[kA]	20	20	20
Voltage protection level Up at In (L-N/N-PE/L-PE)		[kA]	2.5/1.25/1.25	2.8/1.4/1.4	2.8/1.4/1.4
Voltage protection level Up at 3 kA		[kA]	0.8	0.5	0.8
TOV (Temporary over-voltage) withstand Ut	(L-N: 5 s /N-PE: 200 ms)	[V]	334/-	337	334/-
Response time		[ns]	≤ 25	≤ 25	≤ 25
Short-circuit withstand capability Isccr		[kA]	100	100	100
Backup protection	Fuse (gG)	[A]	≤ 125	≤160	≤ 160
	Circuit breaker (B or C curve)	[A]	≤ 125	≤125	≤ 125
Pluggable cartridge			Yes	Yes	Yes
Integrated thermal disconnector			Yes	Yes	Yes
State indicator			Yes	Yes	Yes
Safety reserve			No	Yes	Yes
Auxiliary contact			Yes (TS option)	Yes (TS option)	Yes (TS option)
Installation					
Wire range (L, N, PE)	Solid wire	[mm²]	2.5 ... 35	2.5 ... 35	2.5 ... 35
	Stranded wire	[mm²]	2.5 ... 25	2.5 ... 25	2.5 ... 25
Stripping length (L, N, PE)		[mm]	12.5	12.5	12.5
Tightening torque (L, N, PE)		[Nm]	2.5	2.5	2.5
Auxiliary contact (TS)					
Contact complement			1 NO - 1 NC	1 NO - 1 NC	1 NO - 1 NC
Minimum load			12 V DC - 10 mA	12 V DC - 10 mA	12 V DC - 10 mA
Maximum load			250 V AC - 1 A	250 V AC - 1 A	250 V AC - 1 A
Connection cross-section		[mm²]	1.5	1.5	1.5
Miscellaneous characteristics					
Stocking and operating temperature		[°C]	-40 to +80	-40 to +80	-40 to +80
Maximal Altitude		[m]	5000	5000	5000
Degree of protection			IP20	IP 20	IP20
Fire resistance according to UL 94			V0	V0	V0
Dimensions	height x width x depth	[mm]	88 x 71.2 x 65.3	88 x 71.2 x 76.7	88 x 71.2 x 76.7
		[inches]	3.46 x 2.8 x 2.57	3.46 x 2.8 x 3.02	3.46 x 2.8 x 3.02
with auxiliary contact (TS)	height x width x depth	[mm]	95.8 x 71.2 x 65.3	95.8 x 71.2 x 76.7	95.8 x 71.2 x 76.7
		[inches]	3.77 x 2.8 x 2.57	3.77 x 2.8 x 3.02	3.77 x 2.8 x 3.02
Replacement Cartridges					
Phase Product ID			OVR T2 40-275 C QS 2CTB803876R1000	OVR T2 40-275s C QS 2CTB8157084R2600	OVR T2 80-275s C QS 2CTB815708R2600
Neutral Product ID			-	-	-

Protection and safety

OVR Type 2 pluggable QuickSafe® surge protective devices
TNS 230 V networks



OVR T2 4L 40-275 P QS

Type 2 surge protective devices are designed to protect electric installations and sensitive equipment against indirect surges with ensuring a low protection level (Up). They are characterized by their capacity to safely discharge current with 8/20 µs wave form.

Type 2 pluggable - Uc 275 V

Poles	Max discharge current Imax 8/20	Nominal discharge current In	Voltage protection level Up	Nominal voltage Un	Max. cont. operating voltage Uc	Bbn 3660308	Order details		Weight 1 piece
	kA	kA	kV	V	V	EAN	Type code	Order code	kg
4	40	20	1.25	230/400	275	520548	OVR T2 4L 40-275 P QS	2CTB803873R5600	0.45
4	40	20	1.25	230/400	275	520555	OVR T2 4L 40-275 P TS QS	2CTB803873R5200	0.45
4	40	20	1.4	230/400	275	525345	OVR T2 4L 40-275s P QS	2CTB815704R2300	0.45
4	40	20	1.4	230/400	275	525284	OVR T2 4L 40-275s P TS QS	2CTB815704R1100	0.45
4	80	20	1.4	230/400	275	525529	OVR T2 4L 80-275s P QS	2CTB815708R2300	0.45
4	80	20	1.4	230/400	275	525468	OVR T2 4L 80-275s P TS QS	2CTB815708R1100	0.45

Protection and safety

OVR Type 2 pluggable QuickSafe® surge protective devices TNS 400 V networks

Technical features

Types		**OVR T2 4L 40-440 P QS**	**OVR T2 4L 80-440s P QS**
with auxiliary contact (TS)		**OVR T2 4L 40-440 P TS QS**	**OVR T2 4L 80-440s P TS QS**
Technology		Varistor	Varistor
Electrical features			
Standard		IEC 61643-11/EN 61643-11:2012/A11:2018	IEC 61643-11/EN 61643-11:2012/A11:2018
Type/test class		T2/II	T2/II
Protected lines		4	4
System network		TNS	TNS
Type of current		AC 47-63 Hz	AC 47-63 Hz
Voltage regultaion of the system network		± 10%	± 10%
Nominal system voltage Un (L-N/L-L)	V	400/690	400/690
Max. cont. operating AC voltage Uc	V	440	440
Nominal dc voltage Un dc L-PE/Un dc L-L		495/990	-
Max. dc cont. Operating voltage Ucdc L-PE/ Ucdc L-L		545/1090	-
Maximal discharge current Imax (8/20)	kA	40	80
Maximum impulse current Iimp (10/350)	kA	2	6.25
Nominal discharge current In (8/20)	kA	20	20
Follow current interrupting rating Ifi	kA	-	-
Voltage protection level Up at In (L-N/N-PE/L-PE)	kV	3.6/1.8/1.8	3.6/1.8/1.8
Voltage protection level Ures at 3 kA	kV	1.25	-
Voltage protection level Ures at 5 kA		1.35	-
Voltage protection level Ures at 10 kA		1.55	-
TOV (Temporary overvoltage) withstand Ut (L-N: 5s./N-PE: 200ms)	V	581/	581/
Response time	ns	≤25	≤25
Short-circuit withstand capability Isccr	kA	100	100
Backup protection maximum rating			
fuse (gG)	A	≤125	≤160
circuit breaker (B or C curve)	A	≤125	≤125
Pluggable cartridge		Yes	Yes
Integrated thermal disconnector		Yes	Yes
State indicator		Yes	Yes
Safety reserve		No	Yes
Auxiliary contact		Yes (TS option)	Yes (TS option)
Installation			
Wire range (L, N, PE) solid wire	mm^2	2.5 ... 35	2.5 ... 35
stranded wire	mm^2	2.5 ... 25	2.5 ... 25
Stripping length (L, N, PE)	mm	12.5	12.5
Tightening torque (L, N, PE)	Nm	2.5	2.5
Auxiliary contact (TS)		-	-
Contacts information		1 NO - 1 NC	1 NO - 1 NC
Min. load		12 V DC - 10 mA	12 V DC - 10 mA
Max. load		250 V AC - 1 A	250 V AC - 1 A
Connection cross-section	mm^2	1.5	1.5
Miscellanous characteristics			
Stocking and operating temperature	°C	-40 to +80	-40 to +80
Maximal Altitude	[m]	5000	5000
Degree of protection		IP 20	IP 20

Protection and safety

OVR Type 2 pluggable QuickSafe® surge protective devices TNS 400 V networks

Technical features

Types		OVR T2 4L 40-440 P QS	OVR T2 4L 80-440s P QS
with auxiliary contact (TS)		**OVR T2 4L 40-440 P TS QS**	**OVR T2 4L 80-440s P TS QS**
Fire resistance according to UL 94		V0	V0
Dimensions			
height x width x depth	mm	88 x 71.2 x 65.3	88 x 71.2 x 69.4
	inches	3.46 x 2.8 x 2.57	3.46 x 2.8 x 2.57
Dimensions with auxilary contact (TS)			
height x width x depth	mm	95.8 x 142.4 x 69	95 x 71.2 x 69.4
	inches	3.77 x 2.8 x 2.57	3.77 x 2.8 x 2.57
Replacement Cartdriges			
Phase Product ID		OVR T2 40-440 C QS	OVR T2 80-440s C QS
		2CTB803876R0400	2CTB815708R5500



OVR T2 4L 40-440 P TS QS

Type 2 surge protective devices are designed to protect electric installations and sensitive equipment against indirect surges with ensuring a low protection level (Up). They are characterized by their capacity to safely discharge current with 8/20 µs wave form.

OVR T2 Pluggable

Protected lines	Max discharge current Imax 8/20	Nominal current In 8/20	Voltage protection level	Nominal voltage	Max. cont. operating voltage	Bbn 3660308	Order details		Weight 1 piece
	kA		Up kV	Un V	Uc V	EAN	Type code	Order code	kg
4	40	20	1,8	440	440	519894	OVR T2 4L 40-440 P QS	2CTB803873R5100	0.45
4	40	20	1,8	440	440	519900	OVR T2 4L 40-440 P TS QS	2CTB803873R5300	0.45
4	80	20	1,8	440	440	525635	OVR T2 4L 80-440s P QS	2CTB815708R5200	0.6
4	80	20	1,8	440	440	525598	OVR T2 4L 80-440s P TS QS	2CTB815708R4000	0.6

Protection and safety

OVR Type 2 pluggable QuickSafe® surge protective devices TNS/TT 230 and 400 V 1Ph+N networks

Technical features

Types			OVR T2 1N 40-275 P QS	OVR T2 1N 40-275s P QS	OVR T2 1N 80-275s P QS	OVR T2 1N 40-350 P QS	
with auxiliary contact (TS)			OVR T2 1N 40-275 P TS QS	OVR T2 1N 40-275s P TS QS	OVR T2 1N 80-275s P TS QS	OVR T2 1N 40-350 P TS QS	OVR T2 1N 40-440 P TS QS
Technology			Varistor + GDT	Varistor + GDT	Varistor + GDT	Varistor + GDT	Varistor + GDT
Electrical features							
Standard			IEC 61643-11/ EN 61643-11:2012/ A11:2018	IEC 61643-11/ EN 61643-11:2012/ A11:2018	IEC 61643-11/ EN 61643-11:2012/ A11:2018	IEC 61643-11/EN 61643-11:2012/ A11:2018	IEC 61643-11/ EN 61643-11:2012/ A11:2018
Type/test class			T2/II	T2/II	T2/II	T2/II	T2/II
Protected lines			1+1	1+1	1+1	1+1	1+1
System network			TT - TNS	TT - TNS	TT - TNS	TT - TNS	TT-TNS
Type of current			AC 47-63 Hz	AC 47-63 Hz	AC 47-63 Hz	AC 47-63 Hz	AC 47-63 Hz
Voltage regulation of the system network			± 20%	± 20%	± 20%	± 50%	±10 %
Nominal system voltage Un		[V]	230	230	230	230	400
Max. cont. operating voltage Uc		[V]	275	275	275	350	440
Maximum discharge current Imax (8/20)		[kA]	40	40	80	40	40
Maximum impulse current Iimp (10/350)		[kA]	2	2	6.25	2	2
Nominal discharge current In (8/20)		[kA]	20	20	20	20	20
Total Current		[kA]	80	80	80	80	80
Voltage protection level Up at In (L-N/N-PE/L-PE)		[kV]	1.25/1.4/1.5	1.4/1.4/1.5	1.4/1.4/1.5	1.5/1.4/1.6	1,8/1,4/1,9
Voltage protection level Ures at 3 kA		[kV]	0.8/1.4/0.85	0.8/1.4/0.85	0.8/1.4/0.85	1.0/1.4/1.05	1,25/1,4/1,45
Voltage protection level Ures at 5 kA		[kV]	0.85/1.4/0.95	0.85/1.4/0.95	0.85/1.4/0.95	1.05/1.4/1.1	1,35/1,4/1,55
Voltage protection level Ures at 10 kA		[kV]	1/1.4/1.15	1/1.4/1.15	1/1.4/1.15	1.2/1.4/1.3	1,55/1,4/1,65
TOV (Temporary overvoltage) withstand Ut (L-N: 5s./N-PE: 200ms)		[V]	337/1200	337/1200	337/1200	455/1200	581/1200
Uoc		[kV]	-	-	-	-	-
Response time		[ns]	< 25	< 25	< 25	< 25	<25
Short-circuit withstand capability Isccr		[kA]	100	100	100	100	100
Backup protection maximum rating	fuse (gG)	[A]	≤ 125	≤ 160	≤ 160	≤ 125	≤ 125
	circuit breaker (B or C curve)	[A]	≤ 125	≤ 125	≤ 125	≤ 125	≤ 125
Pluggable cartridge			Yes	Yes	Yes	Yes	Yes
Integrated QuickSafe® technology			Yes	Yes	Yes	Yes	Yes
State indicator			Yes	Yes	Yes	Yes	Yes
Safety reserve			No	Yes	Yes	No	No
Auxiliary contact			Yes (TS option)	Yes (TS option)	Yes (TS option)	Yes (TS option)	Yes
Installation							
Wire range (L, N, PE)	solid wire	[mm²]	2.5 ... 35	2.5 ... 35	2.5 ... 35	2.5 ... 35	2.5 ... 35
	stranded wire	[mm²]	2.5 ... 25	2.5 ... 25	2.5 ... 25	2.5 ... 25	2.5 ... 25
Stripping length (L, N, PE)		[mm]	12.5	12.5	12.5	12.5	12.5
Tightening torque (L, N, PE)		[Nm]	2.8	2.8	2.8	2.8	2.8
Auxiliary contact (TS)							
Contacts information			1 NO - 1 NC	1 NO - 1 NC	1 NO - 1 NC	1 NO - 1 NC	1 NO - 1 NC
Min. load			12 DC - 10 mA	12 DC - 10 mA	12 DC - 10 mA	12 DC - 10 mA	12 DC - 10 mA
Max. load			250 V AC - 1A	250 V AC - 1A	250 V AC - 1A	250 V AC - 1A	250 V AC - 1A
Connection cross-section		[mm²]	1.5	1.5	1.5	1.5	1.5
Miscellanous characteristics							
Stocking and operating temperature		°C	-40 to +80	-40 to +80	-40 to +80	-40 to +80	-40 to +80
Maximal Altitude		[m]	5000	5000	5000	5000	5000
Degree of protection			IP 20	IP 20	IP 20	IP 20	IP 20

Protection and safety

OVR Type 2 pluggable QuickSafe® surge protective devices TNS/TT 230 and 400 V 1Ph+N networks

Technical features

Types		OVR T2 1N 40-275 P QS	OVR T2 1N 40-275s P QS	OVR T2 1N 80-275s P QS	OVR T2 1N 40-350 P QS	
with auxiliary contact (TS)		**OVR T2 1N 40-275 P TS QS**	**OVR T2 1N 40-275s P TS QS**	**OVR T2 1N 80-275s P TS QS**	**OVR T2 1N 40-350 P TS QS**	**OVR T2 1N 40-440 P TS QS**
Fire resistance according to UL 94		V0	V-0	V-0	V0	V0
Dimensions						
height x width x depth	mm	88 x 35.6 x 65.3	88 x 35.6 x 76.7	88 x 35.6 x 76.7	88 x 35.6 x 65.3	
	inches	3.46 x 1.4 x 2.57	3.46 x 1.4 x 3.02	3.46 x 1.4 x 3.02	3.46 x 1.4 x 2.57	
With Auxiliary Contact (TS)						
height x width x depth	mm	95.8 x 35.6 x 65.3	95.8 x 35.6 x 76.7	95.8 x 35.6 x 76.7	95.8 x 35.6 x 65.3	95.8 x 35.6 x 65.3
	inches	3.77 x 1.4 x 2.57	3.77 x 1.4 x 3.02	3.77 x 1.4 x 3.02	3.77 x 1.4 x 2.57	3.77 x 1.4 x 2.57
Replacement Cartridges						
Phase Product ID		OVR T2 40-275 C QS 2CTB803876R1000	OVR T2 40-275s C QS 2CTB815704R2600	OVR T2 80-275s C QS 2CTB815708R2600	OVR T2 40-350 C QS 2CTB803886R1000	OVR T2 40-440 C QS 2CTB803876R0400
Neutral Product ID		OVR T2-T3 N 80-275 C QS 2CTB803876R0000	OVR T2 N 80-275s C QS 2CTB815708R2800	OVR T2 N 80-275s C QS 2CTB815708R2800	OVR T2 N 80-350 C QS 2CTB803886R0000	OVR T2 N 80-440 C QS 2CTB803886R0100



OVR T2 1N 40-275 P QS

Type 2 surge protective devices are designed to protect electric installations and sensitive equipment against indirect surges with ensuring a low protection level (Up).
They are characterized by their capacity to safely discharge current with 8/20 µs wave form.

Type 2 pluggable

Poles	Impluse Curent limp 10/350	Max discharge current Imax 8/20	Nominal current In	Voltage protection level Up	Nominal voltage Un	Max. cont. operating voltage Uc	Bbn 3660308	Order details		Weight 1 piece
	kA	kA	kA	kV	V	V	EAN	Type code	Order code	kg
1+1	2	40	20	1.25	230	275	519696	OVR T2 1N 40-275 P QS	2CTB803972R1100	0.24
1+1	2	40	20	1.25	230	275	519702	OVR T2 1N 40-275 P TS QS	2CTB803972R0500	0.24
1+1	2	40	20	1.4	230	275	525239	OVR T2 1N 40-275s P TS QS	2CTB815704R0200	0.30
1+1	2	40	20	1.4	230	275	525307	OVR T2 1N 40-275s P QS	2CTB815704R1400	0.30
1+1	2	80	20	1.4	230	275	525413	OVR T2 1N 80-275s P TS QS	2CTB815708R0200	0.30
1+1	2	80	20	1.4	230	275	525482	OVR T2 1N 80-275s P QS	2CTB815708R1400	0.30
1+1	2	40	20	1.5	230	350	519719	OVR T2 1N 40-350 P QS	2CTB803982R1100	0.24
1+1	2	40	20	1.5	230	350	519726	OVR T2 1N 40-350 P TS QS	2CTB803982R0500	0.24
1+1	2	40	20	1.9	400	440	524577	OVR T2 1N 40-440 P TS QS	2CTB803972R1400	0.24

Protection and safety

OVR Type 2 pluggable QuickSafe® surge protective devices TNS/TT 230 and 400 V 3Ph+N networks



OVR T2 3N 40-275 P QS

Technical features

Types			**OVR T2 3N 40-275 P QS**	**OVR T2 3N 40-275s P QS**
with auxiliary contact (TS)			**OVR T2 3N 40-275 P TS QS**	**OVR T2 3N 40-275s P TS QS**
Technology			Varistor + GDT	Varistor + GDT
Electrical features				
Standard			IEC 61643-11/ EN 61643-11:2012/A11:2018	IEC 61643-11/ EN 61643-11:2012/A11:2018
Type/test class			T2/II	T2/II
Protected lines			3+1	3+1
System network			TT - TNS	TT - TNS
Type of current			AC 47-63 Hz	AC 47-63 Hz
Voltage regulation of the system network			± 20%	± 20%
Nominal system voltage Un (L-N/L-L)		[V]	230/400	230/400
Max. cont. operating voltage Uc (L-N/L-L)		[V]	275/440	275/440
Maximum discharge current Imax (8/20)		[kA]	40	40
Maximum impulse current Iimp (10/350)		[kA]	2	2
Nominal discharge current In (8/20)		[kA]	20	20
Total Current		[kA]	80	80
Voltage protection level Up at In (L-N/N-PE/L-PE)		[kV]	1.25/1.4/1.5	1.4/1.4/1.5
Voltage protection level Ures at 3kA (L-N/N-PE /L-PE)		[kV]	0.8/1.4/0.85	0.8/1.4/0.85
Voltage protection level Ures at 5kA (L-N/N-PE /L-PE)		[kV]	0.85/1.4/0.95	0.85/1.4/0.95
Voltage protection level Ures at 10kA (L-N/N-PE /L-PE)		[kV]	1/1.4/1.15	1/1.4/1.15
TOV (Temporary overvoltage) withstand Ut (L-N: 5s./N-PE: 200ms)		[V]	337/1200	337/1200
Response time		[ns]	< 25	< 25
Short-circuit withstand capability Isccr		[kA]	100	100
Backup protection maximum rating	fuse (gG)	[A]	≤ 125	≤ 160
	circuit breaker (B or C curve)	[A]	≤ 125	≤ 125
Pluggable cartridge			Yes	Yes
Integrated QuickSafe® technology			Yes	Yes
State indicator			Yes	Yes
Safety reserve			No	Yes
Auxiliary contact			Yes (TS option)	Yes (TS option)
Installation				
Wire range (L, N, PE)	solid wire	[mm²]	2.5 ... 35	2.5 ... 35
	stranded wire	[mm²]	2.5 ... 25	2.5 ... 25
Stripping length (L, N, PE)		[mm]	12.5	12.5
Tightening torque (L, N, PE)		[Nm]	2.8	2.8
Auxiliary contact (TS)				
Contacts information			1 NO - 1 NC	1 NO - 1 NC
Min. load			12 DC - 10 mA	12 DC - 10 mA
Max. load			250 V AC - 1A	250 V AC - 1A
Connection cross-section		[mm²]	1.5	1.5
Miscellanous characteristics				
Stocking and operating temperature		[°C]	-40 to +80	-40 to +80
Maximal Altitude		[m]	5000	5000
Degree of protection			IP 20	IP 20
Fire resistance according to UL 94			V0	V-0
Dimensions				
height x width x depth		[mm]	88 x 71.2 x 65.3	88 x 71.2 x 76.7
		[inches]	3.46 x 2.8 x 2.57	3.46 x 2.8 x 3.02
With Auxiliary Contact (TS)				
height x width x depth		[mm]	95.8 x 71.2 x 65.3	95.8 x 71.2 x 76.7
		[inches]	3.77 x 2.8 x 2.57	3.77 x 2.8 x 3.02
Replacement Cartridges				
Phase Product ID			OVR T2 40-275 C QS 2CTB803876R1000	OVR T2 40-275s C QS 2CTB815704R2600
Neutral Product ID			OVR T2-T3 N 80-275 C QS 2CTB803876R0000	OVR T2 N 80-275s C QS 2CTB815708R2800

Protection and safety

OVR Type 2 pluggable QuickSafe® surge protective devices TNS/TT 230 and 400 V 3Ph+N networks

OVR T2 3N 80-275s P QS	OVR T2 3N 40-350 P QS	OVR T2 3N 40-440 P QS		OVR T2 3N 80-440s P QS
OVR T2 3N 80-275s P TS QS	OVR T2 3N 40-350 P TS QS	OVR T2 3N 40-440 P TS QS	OVR T2 3N 40-440s P TS QS	OVR T2 3N 80-440s P TS QS
Varistor + GDT	Varistor + GDT	Varistor + GDT	Varistor + GDT	Varistor + GDT
IEC 61643-11/ EN 61643-11:2012/A11:2018	IEC 61643-11/ EN 61643-11:2012/A11:2018	IEC 61643-11/ EN 61643-11:2012/A11:2018	IEC 61643-11/ EN 61643-11:2012/A11:2018	IEC 61643-11/ EN 61643-11:2012/A11:2018
T2/II	T2/II	T2/II	T2/II	T2/II
3+1	3+1	3+1	3+1	3+1
TT - TNS	TT - TNS	TT - TNS	TT - TNS	TT - TNS
AC 47-63 Hz	AC 47-63 Hz	AC 47-63 Hz	AC 47-63 Hz	AC 47-63 Hz
± 20%	± 50%	± 10%	± 10%	± 10%
230/440	230/400	400/690	400/690	400/690
275/440	350/600	440/760	440/760	440/760
80	40	40	40	80
6.25	2	2	2	6.25
20	20	20	20	20
80	80	80	80	80
1.4/1.4/1.5	1.5/1.4/1.7	1.8/1.4/2.1	1.8/2/2.1	1.8/2/2.1
0.8/1.4/0.85	1.0/1.4/1.05	1.25/1.4/1.45	1.25/1.4/1.45	1.25/1.4/1.45
0.85/1.4/0.95	1.05/1.4/1.1	1.35/1.4/1.45	1.35/1.4/1.45	1.35/1.4/1.45
1/1.4/1.15	1.2/1.4/1.3	1.55/1.4/1.65	1.55/1.4/1.65	1.55/1.4/1.65
337/1200	455/1200	581/1200	581/1200	581/1200
< 25	< 25	< 25	< 26	< 25
100	100	100	100	100
≤ 160	≤ 125	≤ 125	≤ 160	≤ 160
≤ 125	≤ 125	≤ 125	≤ 125	≤ 125
Yes	Yes	Yes	Yes	Yes
Yes	Yes	Yes	Yes	Yes
Yes	Yes	Yes	Yes	Yes
Yes	No	No	Yes	Yes
Yes (TS option)	Yes (TS option)	Yes (TS option)	Yes	Yes (TS option)
2.5 ... 35	2.5 ... 35	2.5 ... 35	2.5 ... 35	2.5 ... 35
2.5 ... 25	2.5 ... 25	2.5 ... 25	2.5 ... 25	2.5 ... 25
12.5	12.5	12.5	12.5	12.5
2.8	2.8	2.8	2.8	2.8
1 NO - 1 NC	1 NO - 1 NC	1 NO - 1 NC	1 NO - 1 NC	1 NO - 1 NC
12 DC - 10 mA	12 DC - 10 mA	12 DC - 10 mA	12 DC - 10 mA	12 DC - 10 mA
250 V AC - 1A	250 V AC - 1A	250 V AC - 1A	250 V AC - 1A	250 V AC - 1A
1.5	1.5	1.5	1.5	1.5
-40 to +80	-40 to +80	-40 to +80	-40 to +80	-40 to +80
5000	5000	5000	5000	5000
IP 20	IP 20	IP 20	IP 20	IP 20
V-0	V0	V0	V-0	V-0
88 x 71.2 x 76.7	88 x 71.2 x 65.3	88 x 71.2 x 65.3		88 x 71.2 x 76.7
3.46 x 2.8 x 3.02	3.46 x 2.8 x 2.57	3.46 x 2.8 x 2.57		3.46 x 2.8 x 3.02
95.8 x 71.2 x 76.7	95.8 x 71.2 x 65.3	95.8 x 71.2 x 65.3	95.8 x 71.2 x 76.7	95.8 x 71.2 x 76.7
3.77 x 2.8 x 3.02	3.77 x 2.8 x 2.57	3.77 x 2.8 x 2.57	3.77 x 2.8 x 3.02	3.77 x 2.8 x 3.02
OVR T2 80-275s C QS 2CTB815708R2600	OVR T2 40-350 C QS 2CTB803886R1000	OVR T2 40-440 C QS 2CTB803876R0400	OVR T2 40-440s C QS 2CTB815704R5500	OVR T2 80-440s C QS 2CTB815708R5500
OVR T2 N 80-275s C QS 2CTB815708R2800	OVR T2 N 80-350 C QS 2CTB803886R0000	OVR T2-T3 N 80-440 C QS 2CTB803886R0100	OVR T2 N 80-440s C QS 2CTB815708R5700	OVR T2 N 80-440s C QS 2CTB815708R5700

Protection and safety

OVR Type 2 pluggable QuickSafe® surge protective devices TNS/TT 230 and 400 V 3Ph+N networks



OVR T2 3N 40-275 P QS

Type 2 surge protective devices are designed to protect electric installations and sensitive equipment against indirect surges with ensuring a low protection level (Up). They are characterized by their capacity to safely discharge current with 8/20 µs wave form.

Type 2 pluggable

Protected lines	Max discharge current Imax 8/20	Nominal discharge current In	Voltage protection level Up	Nominal voltage Un	Max. cont. operating voltage Uc	Bbn 3660308	Order details		Weight 1 piece
	kA	kA	kV	V	V	EAN	Type code	Order code	kg
3+1	40	20	1.5	230/400	275	519.931	OVR T2 3N 40-275 P QS	2CTB803973R1100	0.48
3+1	40	20	1.5	230/400	275	519.948	OVR T2 3N 40-275 P TS QS	2CTB803973R0500	0.48
3+1	40	20	1.4	230/400	275	52526 0	OVR T2 3N 40-275s P TS QS	2CTB815704R0800	0.60
3+1	40	20	1.4	230/400	275	52532 1	OVR T2 3N 40-275s P QS	2CTB815704R2000	0.60
3+1	80	20	1.4	230/400	275	52544 4	OVR T2 3N 80-275s P TS QS	2CTB815708R0800	0.60
3+1	80	20	1.4	230/400	275	52550 5	OVR T2 3N 80-275s P QS	2CTB815708R2000	0.60
3+1	40	20	1.5	230/400	350	519.962	OVR T2 3N 40-350 P QS	2CTB803983R1100	0.48
3+1	40	20	1.5	230/400	350	519.979	OVR T2 3N 40-350 P TS QS	2CTB803983R0500	0.48
3+1	40	20	1.8	400/690	440	519.993	OVR T2 3N 40-440 P QS	2CTB803973R1400	0.48
3+1	40	20	1.8	400/690	440	520.005	OVR T2 3N 40-440 P TS QS	2CTB803973R1500	0.48
3+1	40	20	1.8	400/690	440	52537 6	OVR T2 3N 40-440s P TS QS	2CTB815704R3700	1.05
3+1	80	20	1.8	400/690	440	52558 1	OVR T2 3N 80-440s P TS QS	2CTB815708R3700	1.05
3+1	80	20	1.8	400/690	440	52562 8	OVR T2 3N 80-440s P QS	2CTB815708R4900	1.05

Notes

Protection and safety

OVR Type T2-T3 pluggable QuickSafe® surge protective devices
Single pole - 230 V and 440 V networks

Technical features

Types			OVR T2-T3 20-275 P QS	OVR T2-T3 20-440 P QS	OVR T2-T3 N 80-275 P QS	OVR T2-T3 N 80-440 P QS
with auxiliary contact (TS)			**OVR T2-T3 20-275 P TS QS**	**OVR T2-T3 20-440 P TS QS**	**-**	**-**
Technology			Varistor	Varistor	GDT	GDT
Electrical features						
Standard			IEC 61643-11/ EN 61643-11:2012/ A11:2018	IEC 61643-11/ EN 61643-11:2012/ A11:2018	IEC 61643-11/ EN 61643-11:2012/ A11:2018	IEC 61643-11/ EN 61643-11:2012/ A11:2018
Type/test class			T2-T3/II-III	T2-T3/II-III	T2-T3/II-III	T2-T3/II-III
Protected lines			1	1	1	1
System network			TNC - TT(L-N) - TNS	TNC - TT(L-N) - TNS	TT (N-PE)-TNS(N-PE)	TT (N-PE)-TNS(N-PE)
Type of current			AC 47-63 Hz	AC 47-63 Hz	AC 47-63 Hz	AC 47-63 Hz
Voltage regulation of the system network			± 20%	± 10%	± 20%	± 10%
Nominal system voltage Un		[V]	230	400	230	400
Max. cont. operating voltage Uc		[V]	275	440	275	440
Nominal dc voltage Un dc L-PE		[V dc]	320	320	-	-
Max. dc. cont. operating voltage Ucdc L-PE		[V dc]	355	355	-	-
Maximum discharge current Imax (8/20)		[kA]	20	20	80	80
Nominal discharge current In (8/20)		[kA]	5	5	2	2
Voltage protection level Up at In (L-N)		[kV]	0.9/-/-	1.4/-/-	30	30
Voltage protection level Ures at 3kA (L-N)		[kV]	0.8	1.25	-/-/1.4	-/-/1.4
Voltage protection level Ures at 5kA (L-N)		[kV]	0.85	1.35	-	-
Voltage protection level Ures at 10kA (L-N)		[kV]	1	1.55	-	-
TOV (Temporary overvoltage) withstand Ut (L-N: 5s./N-PE: 200ms)		[V]	337/-	581/-	-	-
Uoc		[kV]	6	6	-	-
Response time		[ns]	≤ 25	≤ 25	-/1200	-/1200
Short-circuit withstand capability Isccr		[kA]	100	100	<25	<25
Backup protection maximum rating	fuse (gG)	[A]	≤ 125	≤ 125	<125	<125
	circuit breaker (B or C curve)	[A]	≤ 125	≤ 125	<125	<125
Pluggable cartridge			Yes	Yes	Yes	Yes
Integrated QuickSafe® technology			Yes	Yes	-	-
State indicator			Yes	Yes	No	No
Safety reserve			No	No	No	No
Auxiliary contact			Yes (TS option)	Yes (TS option)	No	No
Installation						
Wire range (L, N, PE)	solid wire	[mm²]	2.5 ... 35	2.5 ... 35	2.5 ... 35	2.5 ... 35
	stranded wire	[mm²]	2.5 ... 25	2.5 ... 25	2.5 ... 25	2.5 ... 25
Stripping length (L, N, PE)		[mm]	12.5	12.5	12.5	12.5
Tightening torque (L, N, PE)		[Nm]	2.8	2.8	2.8	2.8
Auxiliary contact (TS)						
Contacts information			1 NO - 1 NC	1 NO - 1 NC	-	-
Min. load			12 DC - 10 mA	12 DC - 10 mA	-	-
Max. load			250 V AC - 1A	250 V AC - 1A	-	-
Connection cross-section		[mm²]	1.5	1.5	-	-
Miscellanous characteristics						
Stocking and operating temperature		[°C]	-40 to +80	-40 to +80	-40 to + 80	-40 to + 80
Maximal Altitude		[m]	5000	5000	5000	5000
Degree of protection			IP 20	IP 20	IP 20 - Indoor	IP 20 - Indoor
Fire resistance according to UL 94			V0	V0	V-0	V-0
Dimensions of packing						

Protection and safety

OVR Type T2-T3 pluggable QuickSafe® surge protective devices
Single pole - 230 V and 440 V networks

Technical features

Types		OVR T2-T3 20-275 P QS	OVR T2-T3 20-440 P QS	OVR T2-T3 N 80-275 P QS	OVR T2-T3 N 80-440 P QS
with auxiliary contact (TS)		**OVR T2-T3 20-275 P TS QS**	**OVR T2-T3 20-440 P TS QS**	**-**	**-**
height x width x depth	[mm]	88 x 17.8 x 65.3	88 x 17.8 x 65.3	85 x 17.8 x 64.8	85 x 17.8 x 64.8
	[inches]	3.46 x 0.7 x 2.57	3.46 x 0.7 x 2.57	3.35 x 0.70 x 2.55	3.35 x 0.70 x 2.55
With Auxiliary Contact (TS)					
height x width x depth	[mm]	95.8 x 17.8 x 65.3	95.8 x 17.8 x 65.3	-	-
	[inches]	3.77 x 0.7 x 2.57	3.77 x 0.7 x 2.57	-	-
Replacement Cartridges					
Phase Product ID		OVR T2-T3 20-275 C QS 2CTB803876R1200	OVR T2-T3 20-440 C QS 2CTB803876R0600	OVR T2-T3 N 80-275 C QS 2CTB803876R0000	OVR T2-T3 N 80-275 C QS 2CTB803876R0000
Neutral Product ID		-	-	-	-



OVR T2 T3 20- 275 P QS

Type 2 and 3 surge protective devices shall be installed as close as possible to the sensitive equipment to protect. As Type 2 they have been characterize by their capacity to safely discharge current with a 8/20 µs wave form and they guarantee the coordination with Type 1 SPDs or other Type 2 respecting coordination distances. As Type 3 they are characterized by their capacity to safely discharge current with 1.2/50 µs wave form, with a very low level of Voltage Protection level.

Poles	Max discharge current Imax 8/20	Nominal discharge current In	Voltage protection level Up	Nominal voltage Un	Max. cont. operating voltage Uc	Bbn 3660308	Order details		Weight 1 piece
	kA	kA	kV	V	V	EAN	Type code	Order code	kg
1	20	5	0.9	230	275	519.566	OVR T2-T3 20-275 P QS	2CTB803871R2400	0.12
1	20	5	0.9	230	275	519.573	OVR T2-T3 20-275 P TS QS	2CTB803871R2500	0.12
1	20	5	1.4	400	440	519.603	OVR T2-T3 20-440 P QS	2CTB803871R1100	0.12
1	20	5	1.4	400	440	519.610	OVR T2-T3 20-440 P TS QS	2CTB803871R1300	0.12
1	80	30	1.4	230	275	519641	OVR T2-T3 N 80-275 P QS	2CTB803973R1900	0.12
1	80	30	1.4	400	440	519641	OVR T2-T3 N 80-440 P QS	2CTB803973R2000	0.12

Protection and safety

OVR Type T2-T3 pluggable QuickSafe® surge protective devices TNC - 230 V 3Ph + N networks

Technical features

Types			**OVR T2-T3 3L 20-275 P QS**
with auxiliary contact (TS)			**OVR T2-T3 3L 20-275 P TS QS**
Technology			Varistor
Electrical features			
Standard			IEC 61643-11/EN 61643-11:2012/A11:2018
Type/test class			T2-T3/II-III
Protected lines			3
System network			TNC
Type of current			AC 47-63 Hz
Voltage regulation of the system network			± 20%
Nominal system voltage Un (L-PE/L-L)		[V]	230/400
Max. cont. operating voltage Uc (L-PE/L-L)		[V]	275/440
Nominal dc voltage Un dc L-PE		[V dc]	320
Max. dc. cont. operating voltage Ucdc L-PE		[V dc]	355
Maximum discharge current Imax (8/20)		[kA]	20
Nominal discharge current In (8/20)		[kA]	5
Total Current		[kA]	60
Voltage protection level Up at In (L-N/N-PE /L-PE)		[kV]	0,85/-/-
Voltage protection level Ures at 3kA		[kV]	0.8
Voltage protection level Ures at 5kA		[kV]	0.85
Voltage protection level Ures at 10kA		[kV]	1.0
TOV (Temporary overvoltage) withstand Ut (L-N: 5s./N-PE: 200ms)		[V]	337/-
Uoc		[kV]	6
Response time		[ns]	≤ 25
Short-circuit withstand capability Isccr		[kA]	100
Backup protection maximum rating	fuse (gG)	[A]	≤ 125
	circuit breaker (B or C curve)	[A]	≤ 125
Pluggable cartridge			Yes
Integrated QuickSafe® technology			Yes
State indicator			Yes
Safety reserve			No
Auxiliary contact			Yes (TS option)
Installation			
Wire range (L, N, PE)	solid wire	[mm²]	2.5 ... 35
	stranded wire	[mm²]	2.5 ... 25
Stripping length (L, N, PE)		[mm]	12.5
Tightening torque (L, N, PE)		[Nm]	2.8
Auxiliary contact (TS)			
Contacts information			1 NO - 1 NC
Min. load			12 DC - 10 mA
Max. load			250 V AC - 1A
Connection cross-section		[mm²]	1.5
Miscellanous characteristics			
Stocking and operating temperature		[°C]	-40 to +80
Maximal Altitude		[m]	5000
Degree of protection			IP 20
Fire resistance according to UL 94			V0
Dimensions			
height x width x depth		mm	88 x 53.4 x 65.3
		inches	3.46 x 2.1 x 2.57

Protection and safety

OVR Type T2-T3 pluggable QuickSafe® surge protective devices
TNC - 230 V 3Ph + N networks

Technical features

Types		**OVR T2-T3 3L 20-275 P QS**
with auxiliary contact (TS)		**OVR T2-T3 3L 20-275 P TS QS**
With Auxiliary Contact (TS)		
height x width x depth	mm	95.8 x 53.4 x 65.3
	inches	3.77 x 2.1 x 2.57
Replacement Cartridges		
Phase Product ID		OVR T2-T3 20-275 C QS 2CTB803876R1200
Neutral Product ID		-



OVR T2 T3 3L 20-275 P TS QS

Type 2 and 3 surge protective devices shall be installed as close as possible to the sensitive equipment to protect. As Type 2 they have been characterize by their capacity to safely discharge current with a 8/20 µs wave form and they guarantee the coordination with Type 1 SPDs or other Type 2 respecting coordination distances. As Type 3 they are characterized by their capacity to safely discharge current with 1.2/50 µs wave form, with a very low level of Voltage Protection level.

Poles	Max discharge current Imax 8/20	Nominal discharge current In	Voltage protection level Up	Nominal voltage Un	Max. cont. operating voltage Uc	Bbn 3660308	Order details		Weight 1 piece
	kA	kA	kV	V	V	EAN	Type code	Order code	kg
3	20	5	0.85	230/400	275	519818	OVR T2-T3 3L 20-275 P QS	2CTB803873R3400	0.36
3	20	5	0.85	230	275	520661	OVR T2-T3 3L 20-275 P TS QS	2CTB803873R3500	0.36

Protection and safety

OVR Type T2-T3 QuickSafe® surge protective devices TNS/TT - 230 V 1Ph+N networks

Technical features

Types			**OVR T2-T3 1N 20-275 P QS**
with auxiliary contact (TS)			**OVR T2-T3 1N 20-275 P TS QS**
Technology			Varistor + GDT
Electrical features			
Standard			IEC 61643-11/EN 61643-11:2012/A11:2018
Type/test class			T2-T3/II-III
Protected lines			1+1
System network			TT - TNS
Type of current			AC 47-63 Hz
Voltage regulation of the system network			± 20%
Nominal system voltage Un		[V]	230
Max. cont. operating voltage Uc		[V]	275
Maximum discharge current Imax (8/20)		[kA]	20
Nominal discharge current In (8/20)		[kA]	5
Total Current		[kA]	40
Voltage protection level Up at In (L-N/N-PE/L-PE)		[kV]	0.9/1.4/1.4
Voltage protection level Ures at 3kA (L-N/N-PE /L-PE)		[kV]	0.8/1.4/0.85
Voltage protection level Ures at 5kA(L-N/N-PE /L-PE)		[kV]	0.85/1.4/0.95
Voltage protection level Ures at 10kA (L-N/N-PE /L-PE)		[kV]	1/1.4/1.15
TOV (Temporary overvoltage) withstand Ut (L-N: 5s./N-PE: 200ms)		[V]	337/1200
Uoc		[kV]	6
Response time		[ns]	≤ 25
Residual current IPE		[µA]	≤ 10
Short-circuit withstand capability Isccr		[kA]	100
Backup protection maximum rating	fuse (gG)	[A]	≤ 125
	circuit breaker (B or C curve)	[A]	≤ 125
Pluggable cartridge			Yes
Integrated QuickSafe® technology			Yes
State indicator			Yes
Safety reserve			No
Auxiliary contact			Yes (TS option)
Installation			
Wire range (L, N, PE)	solid wire	[mm²]	2.5 ... 35
	stranded wire	[mm²]	2.5 ... 25
Stripping length (L, N, PE)		[mm]	12.5
Tightening torque (L, N, PE)		[Nm]	2.8
Auxiliary contact (TS)			
Contacts information			1 NO - 1 NC
Min. load			12 DC - 10 mA
Max. load			250 V AC - 1A
Connection cross-section		[mm²]	1.5
Miscellanous characteristics			
Stocking and operating temperature		[°C]	-40 to +80
Maximal Altitude		[m]	5000
Degree of protection			IP 20
Fire resistance according to UL 94			V0

Protection and safety

OVR Type T2-T3 QuickSafe® surge protective devices
TNS/TT - 230 V 1Ph+N networks

Technical features

Types		**OVR T2-T3 1N 20-275 P QS**
with auxiliary contact (TS)		**OVR T2-T3 1N 20-275 P TS QS**
Dimensions		
height x width x depth	[mm]	88 x 35.6 x 65.3
	[inches]	3.46 x 1.4 x 2.57
With Auxiliary Contact (TS)		
height x width x depth	mm	95.8 x 35.6 x 65.3
	inches	3.77 x 1.4 x 2.57
Replacement Cartridges		
Phase Product ID		OVR T2-T3 20-275 C QS 2CTB803876R1200
Neutral Product ID		OVR T2-T3 N 80-275 C QS 2CTB803876R0000



OVR T2 T3 1N 20-275 P QS

Type 2 and 3 surge protective devices shall be installed as close as possible to the sensitive equipment to protect. As Type 2 they have been characterize by their capacity to safely discharge current with a 8/20 µs wave form and they guarantee the coordination with Type 1 SPDs or other Type 2 respecting coordination distances. As Type 3 they are characterized by their capacity to safely discharge current with 1.2/50 µs wave form, with a very low level of Voltage Protection level.

Poles	Max discharge current Imax 8/20	Nominal discharge current In	Voltage protection level Up	Nominal voltage Un	Max. cont. operating voltage Uc	Bbn 3660308	Order details		Weight 1 piece
	kA	kA	kV	V	V	EAN	Type code	Order code	kg
1+1	20	5	1.4	230	275	519689	OVR T2-T3 1N 20-275 P QS	2CTB803972R1200	0.24
1+1	20	5	1.4	230	275	520654	OVR T2-T3 1N 20-275 P TS QS	2CTB803972R1300	0.24

5

Protection and safety

OVR Type T2-T3 QuickSafe® surge protective devices
TT - 230 V and 400 V 3Ph+N networks

Technical features

Types			OVR T2-T3 3N 20-275 P QS	OVR T2-T3 3N 20-440 P QS
with auxiliary contact (TS)			**OVR T2-T3 3N 20-275 P TS QS**	
Technology			Varistor + GDT	Varistor + GDT
Electrical features				
Standard			IEC 61643-11/EN 61643-11:2012/ A11:2018	IEC 61643-11 /EN 61643-11:2012/ A11:2018
Type/test class			T2-T3/II-III	T2-T3 /II-III
Protected lines			3+1	3+1
System network			TT - TNS	TT - TNS
Type of current			AC 47-63 Hz	AC 47-63 Hz
Voltage regulation of the system network			± 20%	± 10%
Nominal system voltage Un (L-N/L-L)		[V]	230/400	400/690
Max. cont. operating voltage Uc (L-N/L-L)		[V]	275/440	440/750
Maximum discharge current Imax (8/20)		[kA]	20	20
Nominal discharge current In (8/20)		[kA]	5	5
Total Current		[kA]	80	80
Voltage protection level Up at In (L-N/N-PE/L-PE)		[kV]	0.9/1.4/1.4	1.4/1.4/1.4
Voltage protection level Ures at 3kA (L-N/N-PE /L-PE)		[kV]	0.8/1.4/0.85	1.25/1.4/1.4
Voltage protection level Ures at 5kA (L-N/N-PE /L-PE)		[kV]	0.85/1.4/0.95	1.35/1.4/1.45
Voltage protection level Ures at 10kA (L-N/N-PE /L-PE)		[kV]	1/1.4/1.15	1.35/1.4/1.65
TOV (Temporary overvoltage) withstand Ut (L-N: 5s./ N-PE: 200ms)		[V]	337/1200	581/1200
Uoc		[kV]	6	6
Response time		[ns]	≤ 25	≤ 25
Residual current IPE		[µA]	≤ 10	≤ 10
Short-circuit withstand capability Isccr		[kA]	100	100
Backup protection maximum rating	fuse (gG)	[A]	≤ 125	≤ 125
	circuit breaker (B or C curve)	[A]	≤ 125	≤ 125
Pluggable cartridge			Yes	Yes
Integrated QuickSafe® technology			Yes	Yes
State indicator			Yes	Yes
Safety reserve			No	No
Auxiliary contact			Yes (TS option)	Yes (TS option)
Installation				
Wire range (L, N, PE)	solid wire	[mm²]	2.5 ... 35	2.5 ... 35
	stranded wire	[mm²]	2.5 ... 25	2.5 ... 25
Stripping length (L, N, PE)		[mm]	12.5	12,5
Tightening torque (L, N, PE)		[Nm]	2.8	2,8
Auxiliary contact (TS)				
Contacts information			1 NO- 1 NC	1 NO- 1 NC
Min. load			12 DC - 10 mA	12 DC - 10 mA
Max. load			250 V AC - 1A	250 V AC - 1A
Connection cross-section		[mm²]	1.5	1.5
Miscellanous characteristics				
Stocking and operating temperature		[°C]	-40 to +80	-40 to +80
Maximal Altitude		[m]	5000	5000
Degree of protection			IP 20	IP 20

Protection and safety

OVR Type T2-T3 QuickSafe® surge protective devices
TT - 230 V and 400 V 3Ph+N networks

Technical features

Types		OVR T2-T3 3N 20-275 P QS	OVR T2-T3 3N 20-440 P QS
with auxiliary contact (TS)		**OVR T2-T3 3N 20-275 P TS QS**	
Fire resistance according to UL 94		V0	V0
Dimensions			
height x width x depth	mm	88 x 71.2 x 65.3	88 x 71.2 x 65.3
	inches	3.46 x 2.8 x 2.57	3.46 x 2.8 x 2.57
With Auxiliary Contact (TS)			
height x width x depth	mm	95.8 x 71.2 x 65.3	96 x 71.2 x 64.8
	inches	3.77 x 2.8 x 2.57	3.35 x 2.81 x 2.55
Replacement Cartridges			
Phase Product ID		OVR T2-T3 20-275 C QS 2CTB803876R1200	OVR T2-T3 20-440 C QS 2CTB803876R0600
Neutral Product ID		OVR T2-T3 N 80-275 C QS 2CTB803876R0000	OVR T2-T3 N 80-440 C QS 2CTB803886R0100



OVR T2 T3 3N 20-275 P TS QS

Type 2 and 3 surge protective devices shall be installed as close as possible to the sensitive equipment to protect. As Type 2 they have been characterize by their capacity to safely discharge current with a 8/20 µs wave form and they guarantee the coordination with Type 1 SPDs or other Type 2 respecting coordination distances. As Type 3 they are characterized by their capacity to safely discharge current with 1.2/50 µs wave form, with a very low level of Voltage Protection level.

Poles	Max discharge current Imax 8/20	Nominal discharge current In	Voltage protection level Up	Nominal voltage Un	Max. cont. operating voltage Uc	Bbn 3660308	Order details		Weight 1 piece
	kA	kA	kV	V	V	EAN	Type code	Order code	kg
3+1	20	5	1.4	230/400	275	519924	OVR T2-T3 3N 20-275 P QS	2CTB803973R1200	0.48
3+1	20	5	1.4	230/400	275	520692	OVR T2-T3 3N 20-275 P TS QS	2CTB803973R1600	0.48
3+1	20	5	1.5	400/690	440	519986	OVR T2-T3 3N 20-440 P QS	2CTB803973R1300	0.48

Protection and safety

OVR PV surge protective devices Photovoltaic networks

Technical features

Types			OVR PV T2 40-1000 P	OVR PV T2 40-1500 P
with auxiliary contact (TS)			OVR PV T2 40-1000 P TS	OVR PV T2 40-1500 P TS
Technology			Varistor	Varistor
Electrical features				
Standard			IEC 61643-31 UL 1449 5th Ed	IEC 61643-31 UL 1449 5th Ed
Type/test class			T2/II (EN) & Type 1 CA (UL)	T2/II (EN) & Type 1 CA (UL)
Protected lines			2	2
Types of networks			Photovoltaic	Photovoltaic
Type of current			DC	DC
Nominal voltage Un (L-N/L-L)		[V]	1000	1500
Max. cont. operating voltage Ucpv		[V]	1000	1500
Max.cont.operating voltage according Ⓤℓ (MCOV)		[V]	1000	1500
Maximum discharge current Imax (8/20)		[kA]	40	40
Nominal discharge current In (8/20)		[kA]	20	15
Voltage protection level Up at In (L-L/L-PE)		[kV]	4	5
Voltage protection rating according Ⓤℓ (VPR (L+/G, L-/G, L+/L-))		[kV]	3	4
Response time		[ns]	≤ 25	≤ 25
Residual current IPE		[µA]	≤1000	≤1000
Short-circuit DC current Iscpv		[A]	10,000	10,000
Short circuit withstand according Ⓤℓ (S_{CCR})		[kA]	10	10
Disconnector	Fuse		no need up to 10 kA	no need up to 10 kA
	Circuit breaker		no need up to 10 kA	no need up to 10 kA
Pluggable cartridge			Yes	Yes
Integrated specific thermal disconnector			Yes	Yes
State indicator			Yes	Yes
Safety reserve			No	No
Auxiliary contact			Yes (TS option)	Yes (TS option)
Installation				
Wire range (L, N, PE)	Solid wire	[mm²]	2.5…35	2.5…35
	Stranded wire	[mm²]	2.5…25	2.5…25
Stripping length (L, N, PE)			12	12
Tightening torque (L, N, PE)		NM	4	4
Auxiliary contact (TS)				
Contact complement			1 NO - 1 NC	1 NO - 1 NC
Minimum load			12 V DC - 10 mA	12 DC - 10 mA
Maximum load			250 V AC - 1 A	250 V AC - 1A
Connection cross-section			1.5	1.5
Miscellaneous characteristics				
Stocking and operating temperature		[°C]	-40 to +80	-40 to +80
Maximal Altitude		[m]	2000	2000
Humidity Rate HR			95% (non condensing)	95% (non condensing)
Degree of protection			IP20	IP 20
Fire resistance according to UL 94			V0	V0
Dimensions	height x width x depth	[mm]	90 x 54 x 73	90 x 54 x 73
		[inches]	3.5 x 2.12 x 2.87	3.5 x 2.12 x 2.87
with auxiliary contact (TS)	height x width x depth	[mm]	99 x 54 x 73	99 x 54 x 73
		[inches]	3.89 x 2.12 x 2.87	3.89 x 2.12 x 2.87
Replacement Cartridges				
Phase Product ID			OVR PV T2 40-1000 C 2CTB802402R1000	OVR PV T2 40-1500 C 2CTB802402R1500

Technical features

Types			**OVR PV T1-T2 5-1000 P QS**	**OVR PV T1-T2 12.5-1000 P QS**	**OVR PV T1-T2 5-1500 P QS**	**OVR PV T1-T2 10-1500 P QS**
With auxiliary contact (TS)			**OVR PV T1-T2 5-1000 P TS QS**	**OVR PV T1-T2 12.5-1000 P TS QS**	**OVR PV T1-T2 5-1500 P TS QS**	**OVR PV T1-T2 10-1500 P TS QS**
Technology			Varistor	Varistor	Varistor	Varistor
Electrical features						
Standard			IEC61643-11/ IEC 61643-31	IEC61643-11/ IEC 61643-31/ UL 1449 4th Ed.	IEC61643-11/ IEC 61643-31/	IEC61643-11/ IEC 61643-31/ UL 1449 4th Ed.
Type/test class			T1-T2/I-II	T1-T2/I-II	T1-T2/I-II	T1-T2/I-II
Protected lines			2	2	2	2
Types of networks			Photovoltaic	Photovoltaic	Photovoltaic	Photovoltaic
Type of current			DC	DC	DC	DC
Nominal Voltage Un (L-N)/L-L)		[V]	1000	1000	1500	1500
Max. cont. Operating voltage Ucpv		[V]	1100	1100	1500	1500
Max.cont.operating voltage accroding Ⓤ (MCOV)			1100	1100	1500	1500
Impulse current Iimp (10/350)		[kA]	5	6.26	5	5
Total discharge current Itotal (10/350)		[kA]	5	12.5	5	10
Maximum discharge current Imax (8/20)		[kA]	40	40	30	30
Nominal discharge current In (8/20)		[kA]	20	20	20	20
Voltage protection level Up at In (L-L/L-N)		[kV]	3,8	3.8	5	5
Voltage protection rating according UL (VPR (L+/G, L-/G, L+/L-))		[kV]	3,8	2.5/2.5/2.5	-	4/4/4
Response time		[ns]	<25	<25	<25	<25
Short circuit DC current Iscpv		[A]	11	11	11	11
Short circuit withstand according Ⓤ (S_{CCR})		[kA]	-	50	-	65
Disconnector	Fuse		no need up to 11 kA	no need up to 11 kA	no need up to 11 kA	no need up to 11 kA
	Circuit breaker		no need up to 11 kA	no need up to 11 kA	no need up to 11 kA	no need up to 11 kA
Pluggable cartridge			Yes	Yes	Yes	Yes
Integrated specific thermal disconnector			Yes	Yes	Yes	Yes
State indicator			Yes	Yes	Yes	Yes
Safety Reserve			No	No	No	No
Auxiliary contact			Yes (TS option)	Yes (TS option)	Yes (TS option)	Yes (TS option)
Installation						
Wire range	Solid wire	[mm²]	2.5....35	2.5....35	2.5....35	2.5....35
(L, N, PE)	Stranded wire	[mm²]	2.5...25	2.5...25	2.5...25	2.5...25
Stripping length (L,N,PE)		[mm²]	12.5	12.5	12.5	12.5
Tightening torque (L, N, PE)		[N.m]	4.5	4.5	4.5	4.5
Auxiliary contact (TS)						
Contact complement			1 NO - 1 NC	1 NO - 1 NC	1 NO - 1 NC	1 NO - 1 NC
Minimum load			12 V DC - 0,5 mA	12 V DC - 0,5 mA	12 V DC - 0,5 mA	12 V DC - 0,5 mA
Maximum load			250 V AC - 1 A	250 V AC - 1 A	250 V AC - 1 A	250 V AC - 1 A
Connection cross-section			1.5	1.5	1.5	1.5
Miscellaneous characteristics						
Stocking and operating temperature		[°C]	-40 to +85	-40 to +85	-40 to +85	-40 to +85
Maximal Altitude		[m]	4000	4000	4000	4000
Humidity Rate HR			95%	95%	95%	95%
Degree of protection			IP 20	IP 20	IP 20	IP 20
Fire resistance according to UL 94			V0	V0	V0	V0
Dimensions	height x width	[mm]	95 x 54 x 86	95 x 54 x 86	95 x 54 x 86	95 x 54 x 86
	depth	[inches]	3.74 x 2.12 x 3.38	3.74 x 2.12 x 3.38	3.74 x 2.12 x 3.38	3.74 x 2.12 x 3.38
With auxiliary contact (TS)	height x width	[mm]	110 x 54 x 86	110 x 54 x 86	110 x 54 x 86	110 x 54 x 86
	depth	[inches]	4.33 x 2.12 x 3.38	4.33 x 2.12 x 3.38	4.33 x 2.12 x 3.38	4.33 x 2.12 x 3.38
Replacement cartridges						
Phase Product ID			OVR PV T1-T2 5-1000 C QS 2CTB812052R1000	OVR PV T1-T2 12.5-1000 C QS 2CTB812122R1000	OVR PV T1-T2 5-1500 C QS 2CTB812052R1500	OVR PV T1-T2 10-1500 C QS 2CTB812102R1500
			-	OVR PV T1-T2 12.5-1000 M C QS 2CTB812122R1001	-	OVR PV T1-T2 10-1500 M C QS 2CTB812102R1501

Protection and safety

OVR PV surge protective devices Photovoltaic networks

Specifically designed for photovoltaic DC installations, the OVR PV family provide a safe and reliable surge and lightning protection of solar panels and converters.
The OVR PV QS surge protective devices comply with EN 50539-11 and UL 1449 5th Edition.

Type T1-T2 and T2 PV

Protected lines	Impulse current Iimp 10/350	Total disch. current Itotal 10/350	Max. dischar. current Imax 8/20	Nominal current In	Voltage protection level Up	Max. cont. operating voltage Ucpv	Bbn 4053546	Order details		Weight 1 piece
	kA	kA	kA	kA	kV	V	EAN	Type code	Order code	kg
1+1 DC	5	5	40	20	3.8/3.8	1100	034615	OVR PV T1-T2 5-1000 P QS	2CTB812050R1000	0.397
1+1 DC	5	5	40	20	3.8/3.8	1100	034639	OVR PV T1-T2 5-1000 P TS QS	2CTB812051R1000	0.406
1+1 DC	6,25	12.5	40	20	3.8/3.8	1100	034660	OVR PV T1-T2 12.5-1000 P QS	2CTB812120R1000	0.453
1+1 DC	6,25	12.5	40	20	3.8/3.8	1100	034677	OVR PV T1-T2 12.5-1000 P TS QS	2CTB812121R1000	0.462
1+1 DC	5	5	30	20	5/5	1500	034646	OVR PV T1-T2 5-1500 P QS	2CTB812050R1500	0.488
1+1 DC	5	5	30	20	5/5	1500	034653	OVR PV T1-T2 5-1500 P TS QS	2CTB812051R1500	0.497
1+1 DC	5	10	30	20	5/5	1500	034684	OVR PV T1-T2 10-1500 P QS	2CTB812100R1500	0.488
1+1 DC	5	10	30	20	5/5	1500	034691	OVR PV T1-T2 10-1500 P TS QS	2CTB812101R1500	0.497
1+1 DC	-	-	40	15	5/5	1500	050240	OVR PV T2 40-1500 P	2CTB802400R1500	0.3
1+1 DC	-	-	40	15	5/5	1500	050288	OVR PV T2 40-1500 P TS	2CTB802401R1500	0.395
1+1 DC	-	-	40	20	4/4	1000	050110	OVR PV T2 40-1000 P	2CTB802400R1000	0.3
1+1 DC	-	-	40	20	4/4	1000	050165	OVR PV T2 40-1000 P TS	2CTB802401R1000	0.395
1+1 DC	-	-	40	15	5/5	1500	050240	OVR PV T2 40-1500 P BULK (24)	2CTB802400Z1500	0.3
1+1 DC	-	-	40	15	5/5	1500	050288	OVR PV T2 40-1500 P TS BULK (24)	2CTB802401Z1500	0.395
1+1 DC	-	-	40	20	4/4	1000	050110	OVR PV T2 40-1000 P BULK (24)	2CTB802400Z1000	0.3
1+1 DC	-	-	40	20	4/4	1000	050165	OVR PV T2 40-1000 P BULK (24) TS	2CTB802401Z1000	0.395



OVR PV T1-T2-5-1000 P TS QS



OVR PV T1-T2-10-1500 P TS QS



OVR PV T2 40-1500 P TS

Digital SPDs—eOVR
Hardware's features

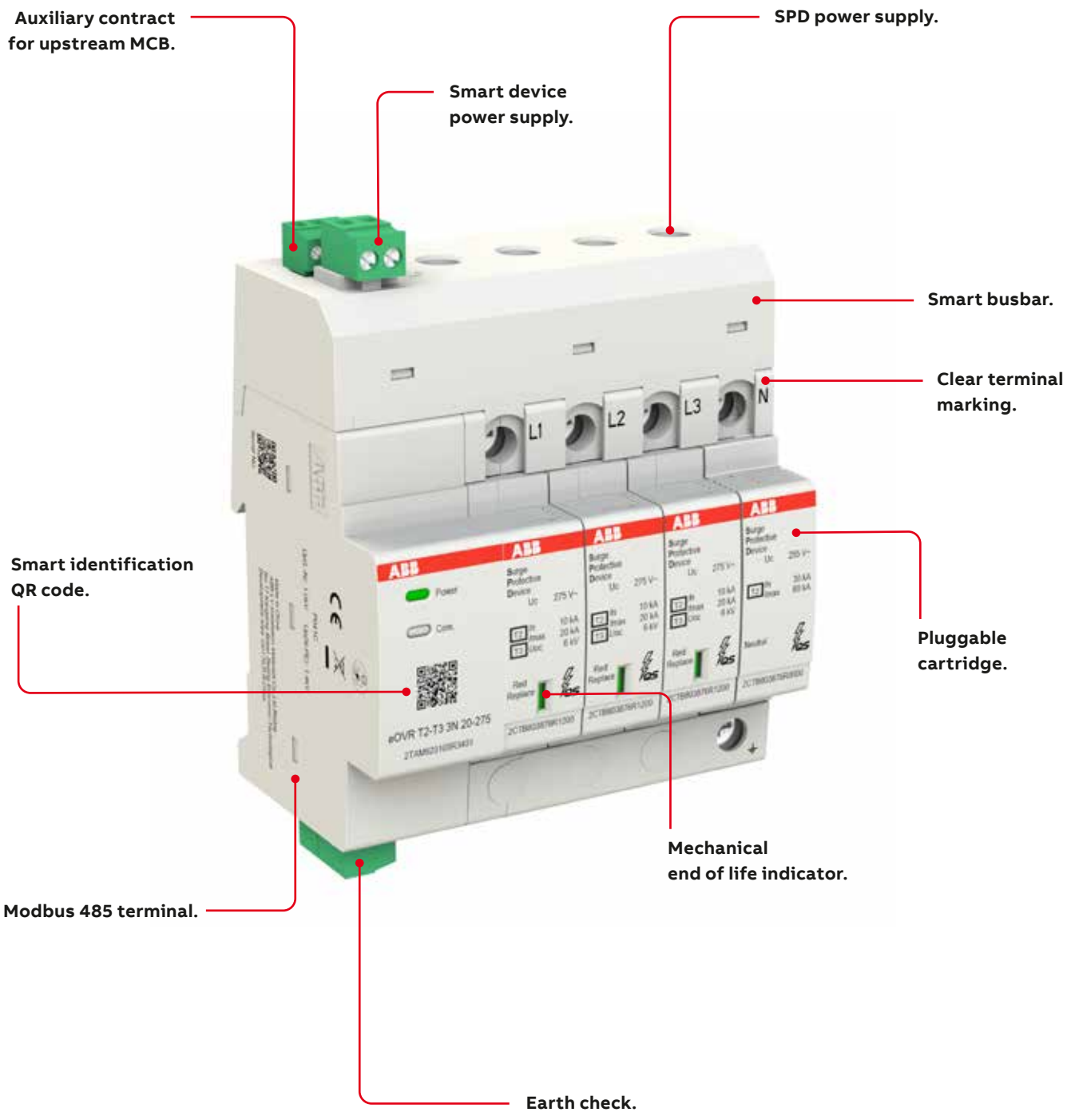

Digital SPDs—eOVR
Hardware's features

SPDs monitoring through integrated captors:
- **End of life in %**
- **MOV leakage current**
- **Surge counter**
- **Over/undervoltage**

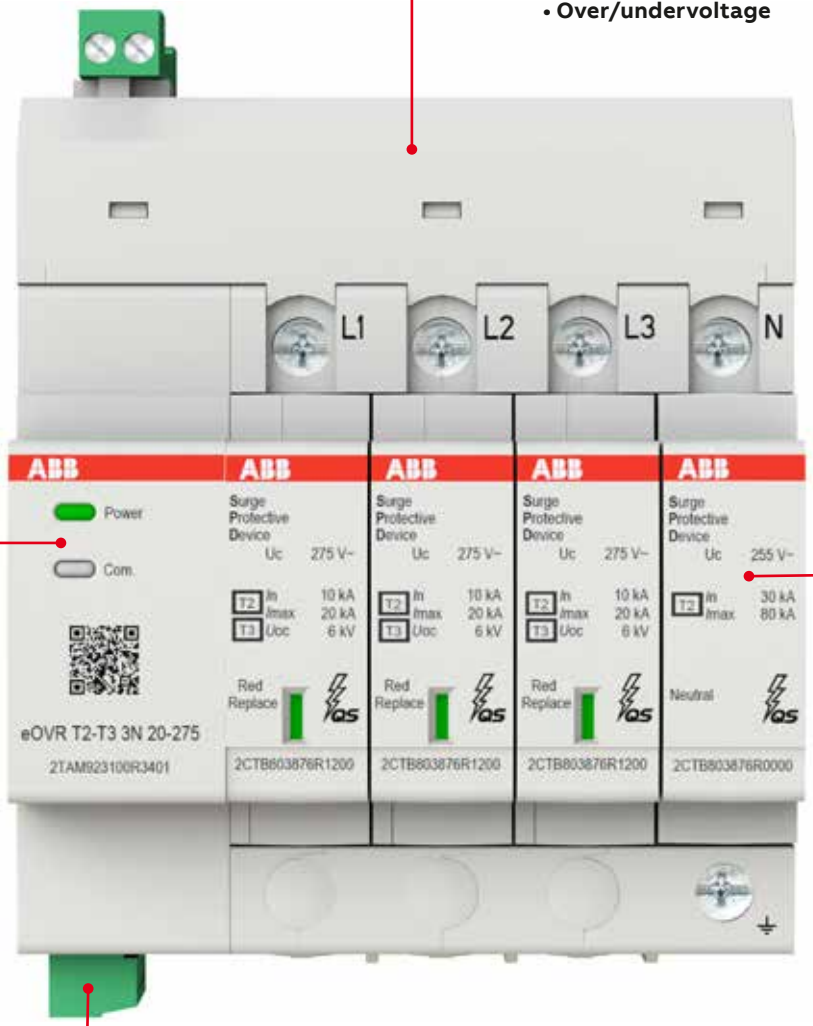

Surge protection:
- **T1-T2 : Iimp 12.5 kA**
- **T2 : Imax 40/80 kA**
- **T2-T3 : Imax 20 kA**

Communication via ModBus RS 485.

Earthing connection fault

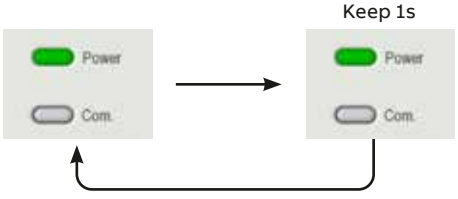

When there is problem of the ground connection, the light of power will be off 1s, then be on.
This cycle will be repeated to this fault is removed, then the light of power will be back to green.

MOV's end of life / SPD triggered / Black up protection failure

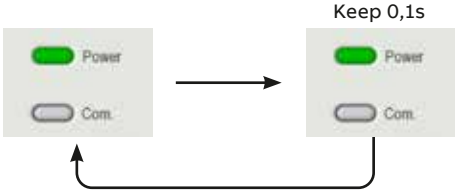

When such malfunction occur, the light of power will be off 0.1s, then be on.
This cycle will be repeated to this fault is removed, then the light of power will be back to green.

Digital SPDs—eOVR

SPDs go to Digital with ABB System Pro InSite

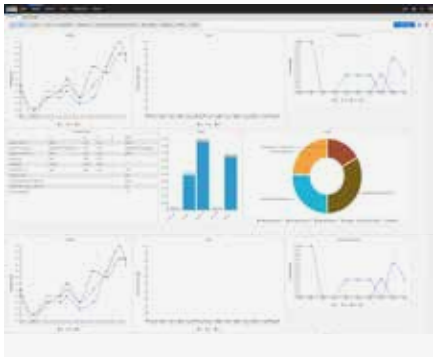

System Pro M InSite compatible
eOVR is compatible to ABB InSite UI and third party UI to monitor all eOVR features.
Digital benefits bring to eOVR new ways to extend SPDs end of life, alarms, notifications, cross data.

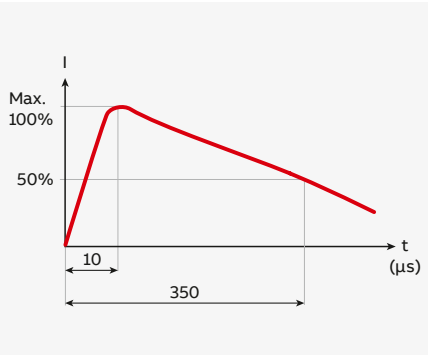

Surge protection level
Tested as Type 1, Type 2 or Type 3 the eOVR series is designed to face surge events either from atmospheric origin or network disturbances.



End of life state
Front end of life display, mechanically connected to the MOV to state its status, also when power off.
- Green: working
- Green/red : should be replace
- Red: must be replaced



Product identification
To easier the access to all eOVR product information (performance, certificates, troubleshooting…) a printed QR code is on the front face to reach the product webpage also when the product is already installed on the Din rail.



Pre-mounted
eOVR is the standard ABB OVR series SPDs factory fitted and tested to the Digital module. Saving time in mounting operations.



Replacement cartridge
The pluggable feature facilitates maintenance. Should one or more worn cartridges need to be replaced, the wires do not have to be removed.

Digital SPDs—eOVR

Software's features

SPDs protect your equipment from transient overvoltages and surges, but after they have coped with a certain amount of surges, their cartridges need to be replaced.

To ensure continuous operation and protection, the device status needs to be monitored remotely.
By connecting to System pro M compact® InSite, it is possible to retrieve the data from the SPD and feed it into the integrated widgets and alarm settings on the InSite web server. Based on the current data status, predictive maintenance can be achieved through end-of-life monitoring, surge event counting, surge amplitude, and leakage current. In addition, real-time data such as past surge event data, ambient temperature, over/under voltage, upstream MCB monitoring, and ground connection status can also be viewed via the web server.

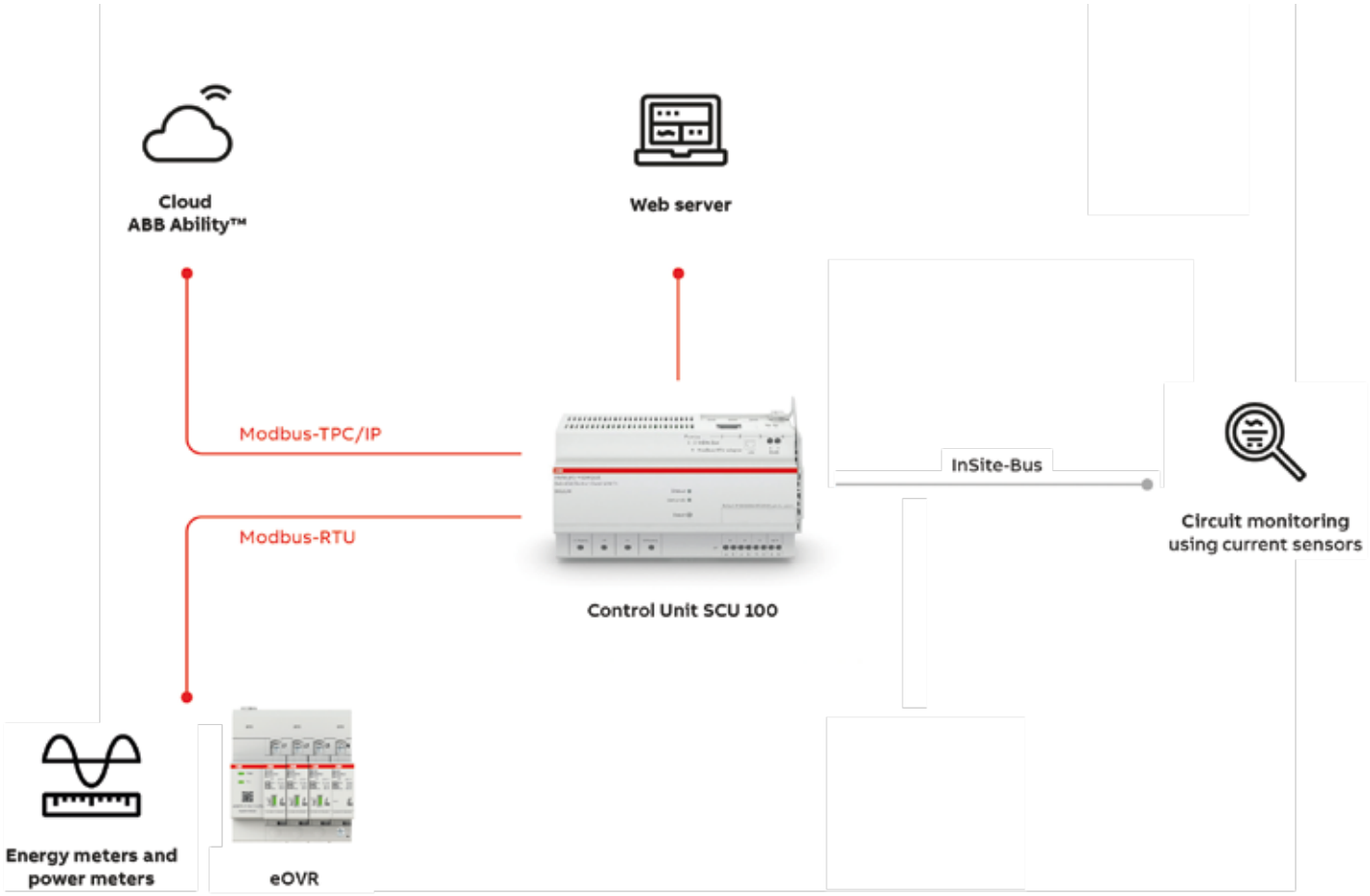

Digital SPDs—eOVR
Software's features

Surge monitoring.



End of life status in %
Based on the current leakage, an algorithm display individual end of life in % to easier the SPD status.



Surge event counter
eOVR is recording all surge events passing through him to let you know the number of events faced and when it happened.



Surge amplitude
Surge event recorded will indicate their surge level, this in the aim to check if the SPD need to be upgraded or explain its premature failing.



Current leakage
Measure the leakage current from each MOV that result from a degradation among event or time.

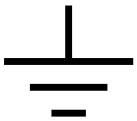

Earthing connection status
States if the eOVR is correctly connected to the ground.

Network monitoring.

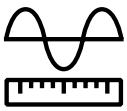

Over/under voltage
Permanent overvoltage can damage the SPD. By recording this feature, it is possible to mitigate the impact by initiating appropriate actions.



Ambient temperature
Measuring the ambient temperature in the enclosure can prevent too high heating, leading to malfunction.



Upstream MCB monitoring
Monitor the upstream protection is switched ON or OFF. When Off, the eOVR will be not operating and will not be able to protect from surge anymore.

Digital SPDs—eOVR

Software's features

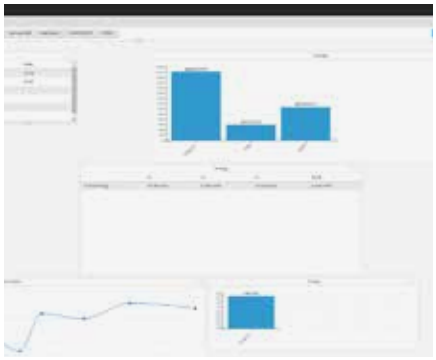

Failing prediction
eOVR measure in real time the leakage current flowing through the Metal Oxide Varistor (MOV) and with an algorithm based on laboratory tests, evaluate in % the end of life status of each MOVs.

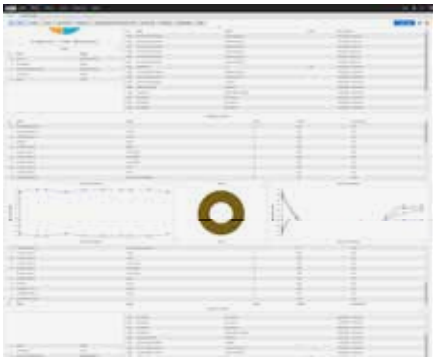

Suggested maintenance operation
Based on the eOVR status (end of life, temperature, network nominal voltages) preventive maintenance operations will be suggested in the aim to optimize the continuity of service by keeping the surge protection level at its maximum.



Maintenance report
It is possible to extract a maintenance report about the eOVR. Such report will support in planning the coming maintenance operation and keep a track of the status into specific period.



Alarms/notifications
InSite offers the possibility to set alarm for eOVR attributes to been advise everytime there is a change, this in the purpose to launch corrective maintenance operation in live to extend the system continuity of service.

Digital SPDs—eOVR

eOVR Type 1 - type 2

Function:
Surge protective devices SPD type 1- type 2, type 2 and type 2– type 3 protect low-voltage consumer sys-tems against lightning currents and surge voltages as they are tested as SPD type 1 and type 2 accord-ing to IEC 61643-11.
They are offering digital features through ABB Pro M InSite UI to monitor several features to enhance its protection level.

Application: Commercial, Building, Industrial.
Standard: IEC 61643-11; EN 61000-6-2/EN 61000-6-3



eOVR T1-T2 3N 12.5-275s

Protected lines	Impulse current	Max discharge current	Nominal current	Follow current interrupting ingrating Ifi	Voltage protection level	Nominal voltage	Max. cont. operating voltage	Order details	
	limp 10/350 kA	Imax 8/20 kA	In kA	Ifi kV	Up kV	Un V	Uc V	Type code	Order code
3+1	12.5	80	20	-	1.4	230/400	275	eOVR T1-T2 3N 12.5-275s	2TAM913100R5411
3+1	12.5	80	20	-	1.4	400/690	440	eOVR T1-T2 3N 12.5-440s	2TAM913100R5811
3	12.5	80	20	-	1.4	400/690	440	eOVR T1-T2 3L 12.5-440s	2TAM913000R5811
3+1	12.5	80	20	-	1.4	400/690	440	eOVR T1-T2 4L 12.5-440s	2TAM914000R5811



eOVR T2 3N 40-350

Protected lines	Impulse current	Max discharge current	Nominal current	Follow current interrupting ingrating Ifi	Voltage protection level	Nominal voltage	Max. cont. operating voltage	Order details	
	limp 10/350 kA	Imax 8/20 kA	In kA	Ifi kV	Up kV	Un V	Uc V	Type code	Order code
1+1	-	40	20	-	1.5	230	350	eOVR T2 1N 40-350	2TAM901100R4501
3+1	-	40	20	-	1.5	230/400	350	eOVR T2 3N 40-350	2TAM903100R4501
3+1	-	80	20	-	2.1	400/690	440	eOVR T2 3N 80-440s	2TAM903100R5811
3+1	-	40	20	-	1.8	230/400	275	eOVR T2 3L 40-275s	2TAM903000R4411



eOVR T2-T3 1N 20-275

Protected lines	Impulse current	Max discharge current	Nominal current	Follow current interrupting ingrating Ifi	Voltage protection level	Nominal voltage	Max. cont. operating voltage	Order details	
	limp 10/350 kA	Imax 8/20 kA	In kA	Ifi kV	Up kV	Un V	Uc V	Type code	Order code
1+1	-	20	5	-	1.4	230	275	eOVR T2-T3 1N 20-275	2TAM921100R3401
3+1	-	20	5	-	1.4	230/400	275	eOVR T2-T3 3N 20-275	2TAM923100R3401

Protection and safety

eOVR T1-T2



				eOVR T1-T2 3N 12.5-275s
	Monitoring	Surge event counter		●
		SPD end of life prediction		●
		SSD/back up status		●
		SPD status		●
		Ambient temperature		●
		Nominal voltage		●
		Surge amplitude		●
		Surge current polarity		-
		Surge energy		-
		Surge time		●
	Detection	Surge detectable value		1kA~80kA
		Surge level to trigger event counter		>1kA
		Leakage current resolution		1μA
		Leakage current measurement range		1μA~500μA
		Maximum measuring period	s	-
		Sampling rate	Hz	-
	Alarm	Front face blinking LED		●
		Audible alarm		-
		Leakage current		●
		Over voltage		●
		Undervoltage		●
		Back up protection status		●
		MOV end of life		●
		SPD status		●
	Record	Local memory capacity		20 surge events and 10 spd remote signal status change record
	Communication	Intranet		Modbus RS-485
		Cloud		ABB InSite Pro M
		Third party		ABB Ability
	ABB Insite Pro M interface	Customized dashboard		●
		Product location		●
		Alarm setting		●
		Historical events extraction		●
		Multiple SPD monitoring		●
		Customized email notification		●
		Automatical maintenance suggestion		●
	Standard	Electromagnetic Compatibility (EMC)		EN 61000-6-2/EN 61000-6-3

			
	eOVR T1-T2 3N 12.5-440s	**eOVR T1-T2 3L 12.5-440s**	**eOVR T1-T2 4L 12.5-440s**
	●	●	●
	●	●	●
	●	●	●
	●	●	●
	●	●	●
	●	●	●
	●	●	●
	-	-	-
	-	-	-
	●	●	●
	1kA~80kA	1kA~80kA	1kA~80kA
	>1kA	>1kA	>1kA
	1µA	1µA	1µA
	1µA~500µA	1µA~500µA	1µA~500µA
	-	-	-
	-	-	-
	●	●	●
	-	-	-
	●	●	●
	●	●	●
	●	●	●
	●	●	●
	●	●	●
	●	●	●
	20 surge events and 10 spd remote signal status change record	20 surge events and 10 spd remote signal status change record	20 surge events and 10 spd remote signal status change record
	Modbus RS-485	Modbus RS-485	Modbus RS-485
	ABB InSite Pro M	ABB InSite Pro M	ABB InSite Pro M
	ABB Ability	ABB Ability	ABB Ability
	●	●	●
	●	●	●
	●	●	●
	●	●	●
	●	●	●
	●	●	●
	●	●	●
	EN 61000-6-2/EN 61000-6-3	EN 61000-6-2/EN 61000-6-3	EN 61000-6-2/EN 61000-6-3

Protection and safety

eOVR T1-T2



					eOVR T1-T2 3N 12.5-275s
	Key characteristics	Protection mode			L-N/N-PE/L-PE/L-L
		Number of protected lines			3P+N
		Test class			I-II / T1-T2
		Pluggable cartrige			●
		Integrated thermal disconnector			●
		End of life indicator			●
		Safety reserve			●
	Electrical characteristics	System network			TT, TNS
		Nominal discharge current	In (8/20)	kA	20
		Maximal discharge current	Imax (8/20)	kA	80
		Impulse current	Iimp (10/350)		12,5
		Maximal continuous operating voltage	Uc	kA	275
		Voltage protection level at In	Up (L-PE)	kV	1,35
		Voltage protection level at In	Up (L-N)	kV	1,2
		Voltage protection level at In	Up (N-PE)	kV	1,1
		Short circuit withstand	Isccr	kA	100
		Total current	Itotal	kA	50
		Follow current interrupted	Ifi	kA	-/0,1
		Ground residual current	Ipe	µA	< 10
		TOV withstand (L-N : 5s / N-PE : 200 ms)	Ut	V	337 / 1200
		Voltage Combination wave		kV	20
	Required thermal/back up protection maximum rating	MCB S200 or POD			-
		Curve B or C Circuit breaker		A	-
		gG - gL fuse		A	< 125
	Standard	Surge Protective Devices			IEC 61643-11 / GB/T 18802.1
	Miscellaneous characteristics	Response time		ns	25
		Fire resistance according to UL 94			V-0
	Replacement cartridges	Phase / Product ID			2CTB815710R2600
		Neutral / Product ID			2CTB815710R2700
Global	Electrical characteristics	Nominal voltage		V	230
		Type of current / frequency		Hz	a.c 47-63
	Mechanical characteristics	Wire range : Solid/Stranded		mm²	2,5...16
		Stripping lenght		mm	12,5
		Tightening torque		N.m	2,8
		Dimensions	W x D x H	mm	98.5 x 69.4 x 111
		Weight		kg	0,865
		Packing quantities		pce	1
		Protection level			IP 20
		Maximal altitude		m	2000
	Miscellaneous characteristics	Temperature		°C	-40 to +80°C
		Relative humidity		% R.H	5-95
	Standard	Intelligent Surge Protective Devices			NB/T 10284

		
eOVR T1-T2 3N 12.5-440s	**eOVR T1-T2 3L 12.5-440s**	**eOVR T1-T2 4L 12.5-440s**
L-N/N-PE/L-PE/L-L	L-L/L-PE	L-N/N-PE/L-PE/L-L
3P+N	3L	3P+N
I-II / T1-T2	I-II / T1-T2	I-II / T1-T2
●	●	●
●	●	●
●	●	●
●	●	●
TT, TNS	TNC	TNS
20	20	20
80	80	80
12,5	12,5	12,5
440	440	440
2	2	1,9
1,9	-	3,8
1,9	-	1,9
100	100	100
50	37,5	50
-/0,1	-/0,1	-/0,1
< 10	< 10	< 10
337 / 1200	337 / 1200	337 / 1200
20	20	20
-	-	-
-	-	-
< 125	< 125	< 125
IEC 61643-11 / GB/T 18802.1	IEC 61643-11 / GB/T 18802.1	IEC 61643-11 / GB/T 18802.1
25	25	25
V-0	V-0	V-0
2CTB815710R5500	2CTB815710R5500	2CTB815710R5500
2CTB815710R5600	-	2CTB815710R5500
400	400	400
a.c 47-63	a.c 47-63	a.c 47-63
2,5...16	2,5...16	2,5...16
12,5	12,5	12,5
2,8	2,8	2,8
151.9 x 69.4 x 111	137.2 x 69.4 x 111	169.7 x 69.4 x 111
1,16	1,052	1,321
1	1	1
IP 20	IP 20	IP 20
2000	2000	2000
-40 to +80°C	-40 to +80°C	-40 to +80°C
5-95	5-95	5-95
NB/T 10284	NB/T 10284	NB/T 10284

Protection and safety

eOVR T2

				
				eOVR T2 1N 40-350
	Monitoring	**Surge event counter**		●
		SPD end of life prediction		●
		SSD/back up status		●
		SPD status		●
		Ambient temperature		●
		Nominal voltage		●
		Surge amplitude		●
		Surge current polarity		-
		Surge energy		-
		Surge time		●
	Detection	**Surge detectable value**		1kA~80kA
		Surge level to trigger event counter		>1kA
		Leakage current resolution		1μA
		Leakage current measurement range		1μA~500μA
		Maximum measuring period	s	-
		Sampling rate	Hz	-
	Alarm	**Front face blinking LED**		●
		Audible alarm		-
		Leakage current		●
		Over voltage		●
		Undervoltage		●
		Back up protection status		●
		MOV end of life		●
		SPD status		●
	Record	**Local memory capacity**		20 surge events and 10 spd remote signal status change record
	Communication	**Intranet**		Modbus RS-485
		Cloud		ABB InSite Pro M
		Third party		ABB Ability
	ABB Insite Pro M interface	**Customized dashboard**		●
		Product location		●
		Alarm setting		●
		Historical events extraction		●
		Multiple SPD monitoring		●
		Customized email notification		●
		Automatical maintenance suggestion		●
	Standard	**Electromagnetic Compatibility (EMC)**		EN 61000-6-2/EN 61000-6-3

			
	eOVR T2 3N 40-350	**eOVR T2 3N 80-440s**	**eOVR T2 3L 40-275s**
	●	●	●
	●	●	●
	●	●	●
	●	●	●
	●	●	●
	●	●	●
	●	●	●
	-	-	-
	-	-	-
	●	●	●
	1kA~80kA	1kA~80kA	1kA~80kA
	>1kA	>1kA	>1kA
	1µA	1µA	1µA
	1µA~500µA	1µA~500µA	1µA~500µA
	-	-	-
	-	-	-
	●	●	●
	-	-	-
	●	●	●
	●	●	●
	●	●	●
	●	●	●
	●	●	●
	●	●	●
	20 surge events and 10 spd remote signal status change record	20 surge events and 10 spd remote signal status change record	20 surge events and 10 spd remote signal status change record
	Modbus RS-485	Modbus RS-485	Modbus RS-485
	ABB InSite Pro M	ABB InSite Pro M	ABB InSite Pro M
	ABB Ability	ABB Ability	ABB Ability
	●	●	●
	●	●	●
	●	●	●
	●	●	●
	●	●	●
	●	●	●
	●	●	●
	EN 61000-6-2/EN 61000-6-3	EN 61000-6-2/EN 61000-6-3	EN 61000-6-2/EN 61000-6-3

Protection and safety

eOVR T2

					
					eOVR T2 1N 40-350
	Key characteristics	**Protection mode**			L-N/N-PE/L-PE/L-L
		Number of protected lines			1P+N
		Test class			II / T2
		Pluggable cartrige			●
		Integrated thermal disconnector			●
		End of life indicator			●
		Safety reserve			-
	Electrical characteristics	**System network**			TT, TNS
		Nominal discharge current	In (8/20)	kA	20
		Maximal discharge current	Imax (8/20)	kA	40
		Impulse current	Iimp (10/350)		-
		Maximal continuous operating voltage	Uc	kA	350
		Voltage protection level at In	Up (L-PE)	kV	1,5
		Voltage protection level at In	Up (L-N)	kV	1,4
		Voltage protection level at In	Up (N-PE)	kV	1,25
		Short circuit withstand	Isccr	kA	100
		Total current	Itotal	kA	80
		Follow current interrupted	Ifi	kA	-/0,1
		Ground residual current	Ipe	µA	< 10
		TOV withstand (L-N : 5s / N-PE : 200 ms)	Ut	V	337 / 1200
		Voltage Combination wave		kV	20
	Required thermal/back up protection maximum rating	**MCB S200 or POD**			●
		Curve B or C Circuit breaker		A	< 125
		gG - gL fuse		A	< 125
	Standard	**Surge Protective Devices**			IEC 61643-11 / GB/T 18802.1
	Miscellaneous characteristics	**Response time**		ns	25
		Fire resistance according to UL 94			V-0
	Replacement cartridges	**Phase / Product ID**			2CTB803886R1000
		Neutral / Product ID			2CTB803886R0000
Global	**Electrical characteristics**	**Nominal voltage**		V	230
		Type of current / frequency		Hz	a.c 47-63
	Mechanical characteristics	**Wire range : Solid/Stranded**		mm^2	2,5...16
		Stripping lenght		mm	12,5
		Tightening torque		N.m	2,8
		Dimensions	W x D x H	mm	62.9 x 58 x 111
		Weight		kg	0,46
		Packing quantities		pce	1
		Protection level			IP 20
		Maximal altitude		m	2000
	Miscellaneous characteristics	**Temperature**		°C	-40 to +80°C
		Relative humidity		% R.H	5-95
	Standard	**Intelligent Surge Protective Devices**			NB/T 10284

		
eOVR T2 3N 40-350	**eOVR T2 3N 80-440s**	**eOVR T2 3L 40-275s**
L-N/N-PE/L-PE/L-L	L-N/N-PE/L-PE/L-L	L-L/L-PE
3P+N	3P+N	3L
II / T2	II / T2	II / T2
●	●	●
●	●	●
●	●	●
-	●	●
TT, TNS	TT, TNS	TNC
20	20	20
40	80	40
-	-	-
350	440	275
1,5	2,1	1,4
1,4	1,8	-
1,25	2	-
100	100	100
80	80	80
-/0,1	-/0,1	-/0,1
< 10	< 10	< 10
337 / 1200	337 / 1200	337 / 1200
20	20	20
●	●	●
< 125	< 125	< 125
< 125	< 125	< 125
IEC 61643-11 / GB/T 18802.1	IEC 61643-11 / GB/T 18802.1	IEC 61643-11 / GB/T 18802.1
25	25	25
V-0	V-0	V-0
2CTB803886R1000	2CTB815708R5500	2CTB815704R2600
2CTB803886R0000	2CTB815708R5700	-
230	400	230
a.c 47-63	a.c 47-63	a.c 47-63
2,5...16	2,5...16	2,5...16
12,5	12,5	12,5
2,8	2,8	2,8
98.5 x 58 x 111	98.5 x 69.4 x 111	83.6 x 69.4 x 111
0,715	0,835	0,692
1	1	1
IP 20	IP 20	IP 20
2000	2000	2000
-40 to +80°C	-40 to +80°C	-40 to +80°C
5-95	5-95	5-95
NB/T 10284	NB/T 10284	NB/T 10284

Protection and safety

eOVR T2-T3

				
				eOVR T2-T3 1N 20-275
	Monitoring	**Surge event counter**		●
		SPD end of life prediction		●
		SSD/back up status		●
		SPD status		●
		Ambient temperature		●
		Nominal voltage		●
		Surge amplitude		●
		Surge current polarity		-
		Surge energy		-
		Surge time		●
	Detection	**Surge detectable value**		1kA~80kA
		Surge level to trigger event counter		>1kA
		Leakage current resolution		1μA
		Leakage current measurement range		1μA~500μA
		Maximum measuring period	s	-
		Sampling rate	Hz	-
	Alarm	**Front face blinking LED**		●
		Audible alarm		-
		Leakage current		●
		Over voltage		●
		Undervoltage		●
		Back up protection status		●
		MOV end of life		●
		SPD status		●
	Record	**Local memory capacity**		20 surge events and 10 spd remote signal status change record
	Communication	**Intranet**		Modbus RS-485
		Cloud		ABB InSite Pro M
		Third party		ABB Ability
	ABB Insite Pro M interface	**Customized dashboard**		●
		Product location		●
		Alarm setting		●
		Historical events extraction		●
		Multiple SPD monitoring		●
		Customized email notification		●
		Automatical maintenance suggestion		●
	Standard	**Electromagnetic Compatibility (EMC)**		EN 61000-6-2/EN 61000-6-3



	eOVR T2-T3 3N 20-275
	●
	●
	●
	●
	●
	●
	●
	-
	-
	●
	1kA~80kA
	>1kA
	1µA
	1µA~500µA
	-
	-
	●
	-
	●
	●
	●
	●
	●
	●
	20 surge events and 10 spd remote signal status change record
	Modbus RS-485
	ABB InSite Pro M
	ABB Ability
	●
	●
	●
	●
	●
	●
	●
	EN 61000-6-2/EN 61000-6-3

Protection and safety

eOVR T2-T3



					eOVR T2-T3 1N 20-275
	Key characteristics	Protection mode			L-N/N-PE/L-PE/L-L
		Number of protected lines			1P+N
		Test class			II-III / T2-T3
		Pluggable cartrige			●
		Integrated thermal disconnector			●
		End of life indicator			●
		Safety reserve			-
	Electrical characteristics	System network			TT,TNS
		Nominal discharge current	In (8/20)	kA	5
		Maximal discharge current	Imax (8/20)	kA	20
		Impulse current	Iimp (10/350)		-
		Maximal continuous operating voltage	Uc	kA	275
		Voltage protection level at In	Up (L-PE)	kV	1,4
		Voltage protection level at In	Up (L-N)	kV	0,9
		Voltage protection level at In	Up (N-PE)	kV	1,4
		Short circuit withstand	Isccr	kA	100
		Total current	Itotal	kA	80
		Follow current interrupted	Ifi	kA	-/0,1
		Ground residual current	Ipe	µA	< 10
		TOV withstand (L-N : 5s / N-PE : 200 ms)	Ut	V	337 / 1200
		Voltage Combination wave		kV	20
	Required thermal/back up protection maximum rating	MCB S200 or POD			●
		Curve B or C Circuit breaker		A	< 125
		gG - gL fuse		A	< 125
	Standard	Surge Protective Devices			IEC 61643-11 / GB/T 18802.1
	Miscellaneous characteristics	Response time		ns	25
		Fire resistance according to UL 94			V-0
	Replacement cartridges	Phase / Product ID			2CTB803876R1200
		Neutral / Product ID			2CTB803876R0000
Global	Electrical characteristics	Nominal voltage		V	230
		Type of current / frequency		Hz	a.c 47-63
	Mechanical characteristics	Wire range : Solid/Stranded		mm^2	2,5...16
		Stripping lenght		mm	12,5
		Tightening torque		N.m	2,8
		Dimensions	W x D x H	mm	62.9 x 58 x 111
		Weight		kg	0,453
		Packing quantities		pce	1
		Protection level			IP 20
		Maximal altitude		m	2000
	Miscellaneous characteristics	Temperature		°C	-40 to +80°C
		Relative humidity		% R.H	5-95
	Standard	Intelligent Surge Protective Devices			NB/T 10284



	eOVR T2-T3 3N 20-275
	L-N/N-PE/L-PE/L-L
	3P+N
	II-III / T2-T3
	●
	●
	●
	-
	TT,TNS
	5
	20
	-
	275
	1,4
	0,9
	1,4
	100
	80
	-/0,1
	< 10
	337 / 1200
	20
	●
	< 125
	< 125
	IEC 61643-11 / GB/T 18802.1
	25
	V-0
	2CTB803876R1200
	2CTB803876R0000
	230
	a.c 47-63
	2,5...16
	12,5
	2,8
	98.5 x 58 x 111
	0,694
	1
	IP 20
	2000
	-40 to +80°C
	5-95
	NB/T 10284

Protection and safety

Accessories for OVR



Accessory for Cartridge Lock

Accessory for Cartridge Lock

This accessory can be fitted into the front of the socket of the SPD of the QS and PV range (for other families please consult us), QS and PV range, to guarantee an even higher withstand to vibrations and shocks, it reinforces mechanical lock between the cartridges and the socket (they are already locked by the pins in the back of the cartridge). It's recommended for stressful environments as the nazelle of the wind turbines. It's sold on packs of 50.

	Bbn 3660308	Order details		Price 1 piece	Weight 1 piece
	EAN	Type code	Order code		kg
Accessory for Cartridge Lock (x50)	526649		2CTB814355Z1200		0.01



Accessory for Auxiliary contact lock

Accessory for Auxiliary contact lock

This accessory can be fitted into the top of the auxiliary contact module and guarantees an even higher withstand to stressful environments. It reinforces the mechanical lock between the auxiliary contact module and the socket of the SPD. It's recommended in environments where the cables of the auxiliary contact can suffer pulls due to the limited length of the auxiliary cables that restrict any potential movements. It's sold on packs of 50. It can not be used on single pole devices. Please order it for multipole versions.

	Bbn 3660308	Order details		Price 1 piece	Weight 1 piece
	EAN	Type code	Order code		kg
Accessory for Auxiliary contact lock (x50)	524805		2CTB814355R2700		0.01

Label for Surge Protected Installations

This label allows the user to identify the panels where surge protection devices are fitted. It's meant to be used in the inside of the panel door and clearly states that the cartridges need to be removed to perform insulation tests. It's sold in packs of 100.

	Bbn 3660308	Order details		Price 1 piece	Weight 1 piece
	EAN	Type code	Order code		kg
Label for Surge Protected Installations (x 100)			2CTB813860R1500		0.01

Notes

Protection and safety

OVR surge protective devices – UL Version
Selection tables

Choosing the correct model

1) Determine the service voltage
Consult qualified personnel if the facility or operation service voltage is unknown.

2) Select the SPD maximum continuous operating voltage (MCOV, Uc)
The MCOV should correspond to the service voltage.
Example: If the service voltage is 480 V Delta, an SPD with 550 V or 660 V MCOV will be required.
Surge protection devices must also provide a level of protection compatible with the withstand voltage of the equipment. This withstand voltage depends on the type of equipment and its sensitivity. The incoming surge protector may not provide adequate protection by itself, as certain electrical phenomena may greatly increase its residual voltage if cable lengths exceed 10 m. A second SPD may be necessary.

3) Select the SPD surge capacity (Imax)
Surge capacity is the amount of energy the SPD can withstand from a single surge event. The higher the surge capacity, the longer the device will protect the system. A second surge protector may be required if the surge capacity of the first is not capable of diverting all surge current to ground. See coordination below.

4) Remote monitoring (Optional)
Integrated auxiliary contact for remote monitoring available on models with "TS" designation. Consult "Selection tables" on next page for help in the selection of SPDs.

Complete facility protection
Installing surge protection at the main distribution panel is only the beginning of protecting the entire operation. As most transient surges are created internally, it is necessary to install surge protection at sub-distribution panels (equipment protection) to be fully protected. Stepping down the Imax level from the service entrance panel toward equipment to be protected is recommended.
For example, if a 40 kA Imax SPD is installed in the main distribution panel, then 15 kA Imax SPDs should be installed in sub-distribution panels for equipment protection.

Coordination
It may be necessary to add a second surge protector, wired to the incoming unit, to achieve the required voltage protection and/or surge capacity. For Type 2 or 4 SPDs, installing this second unit a minimum of 1 m from the first unit will allow the two to work together, achieving the required protection.

Wiring rules
The impedance of the cables increases the voltage across the connected equipment. Therefore, the length of the cable between the surge protector and the equipment should be minimized.
The surge protective device should be installed as close to the equipment to be protected as possible. If this is not possible (the equipment is over 30 m from the panel), then a second surge protector must be installed.

Protected lines	Impulse current Iimp 10/350	Max. discharge current Imax 8/20	Nominal discharge current In	Follow current interrupting rating Ifi	Voltage protection Rating VPR	Nominal voltage Un	Max. cont. operating voltage MCOV	Order details	
	kA	kA	kA	kA	kV	V	V	Type code	Order code
Type 2 - Pluggable - Single Pole networks									
1	–	15	5	–	0.6	120	150	OVR T2 15-150 P U	2CTB802341R0000
1	–	15	5	–	1	277 ±15%	320	OVR T2 15-320 P U	2CTB802341R0400
1	–	40	20	–	0.6	120	150	OVR T2 40-150 P U	2CTB802341R2000
1	–	40	20	–	0.6	120	150	OVR T2 40-150 P TS U	2CTB802341R2100
1	–	40	20	–	1	277 ±15%	320	OVR T2 40-320 P U	2CTB802341R2400
1	–	40	20	–	1	277 ±15%	320	OVR T2 40-320 P TS U	2CTB802341R2500
1	–	40	10	–	1.3	347 ±15%	440	OVR T2 40-440 P TS U	2CTB802341R2900
1	–	40	10	–	1.7	480 ±15%	550	OVR T2 40-550 P TS U	2CTB802341R3300
1	–	40	10	–	1.9	600 ±15%	660	OVR T2 40-660 P TS U	2CTB802341R3700
Neutral									
1	–	70	20	0.1	1.2	230	275	OVR T2 70 N P U	2CTB802341R8000
Cartridges									
1	–	–	–	–	–	120 ±15%	175	OVR T2 15-150 C U	2CTB802348R2500
1	–	–	–	–	–	277 ±15%	320	OVR T2 15-320 C U	2CTB802348R2700
1	–	–	–	–	–	120 ±15%	175	OVR T2 40-150 C U	2CTB802348R3500
1	–	–	–	–	–	277 ±15%	320	OVR T2 40-320 C U	2CTB802348R3700
1	–	–	–	–	–	347 ±15%	440	OVR T2 40-440 C U	2CTB802348R3900
1	–	–	–	–	–	480 ±15%	550	OVR T2 40-550 C U	2CTB802348R4100
1	–	–	–	–	–	600 ±15%	660	OVR T2 40-660 C U	2CTB802348R4300
1	–	–	–	–	–	230	275	OVR T2 70 N C U	2CTB802348R6500

Protection and safety

OVR surge protective devices – UL Version

Selection tables

Protected lines	Impulse current Iimp 10/350 kA	Max. discharge current Imax 8/20 kA	Nominal discharge current In kA	Follow current interrupting rating Ifi kA	Voltage protection Rating VPR kV	Nominal voltage Un V	Max. cont. operating voltage MCOV V	Order details Type code	Order code
Type 2 - Pluggable - Delta networks									
3	–	15	5	–	1	277 +15%	320	OVR T2 3L 15-320 P U	2CTB802345R0400
3	–	40	20	–	1	277 ±15%	320	OVR T2 3L 40-320 P TS U	2CTB802345R2500
3	–	40	10	–	1.7	480 ±15%	550	OVR T2 3L 40-550 P TS U	2CTB802345R3300
Cartridges									
1	–	–	–	–	–	277 ±15%	320	OVR T2 15-320 C U	2CTB802348R2700
1	–	–	–	–	–	277 ±15%	320	OVR T2 40-320 C U	2CTB802348R3700
1	–	–	–	–	–	480 ±15%	550	OVR T2 40-550 C U	2CTB802348R4100
Type 2 - Pluggable - Single Phase networks									
2	–	15	5	–	1.2	120	150	OVR T2 1N 15-150 P U	2CTB802342R0000
2	–	15	5	–	1.2	277	320	OVR T2 1N 15-320 P U	2CTB802342R0400
2	–	40	20	–	1.2	120	150	OVR T2 1N 40-150 P U	2CTB802342R2000
2	–	40	20	–	1.2	120	150	OVR T2 1N 40-150 P U (x10)	2CTB802342R8000
2	–	40	20	–	1.2	120	150	OVR T2 1N 40-150 P TS U	2CTB802342R2100
2	–	40	20	–	1.2	277	320	OVR T2 1N 40-320 P TS U	2CTB802342R2500
2	–	40	10	–	1.2	347	440	OVR T2 1N 40-440 P TS U	2CTB802342R2900
2	–	40	10	–	1.2	480	550	OVR T2 1N 40-550 P TS U	2CTB802342R3300
2	–	40	10	–	1.2	600	660	OVR T2 1N 40-660 P TS U	2CTB802342R3700
Cartridges									
1	–	–	–	–	–	120 ±15%	175	OVR T2 15-150 C U	2CTB802348R2500
1	–	–	–	–	–	277 ±15%	320	OVR T2 15-320 C U	2CTB802348R2700
1	–	–	–	–	–	120 ±15%	175	OVR T2 40-150 C U	2CTB802348R3500
1	–	–	–	–	–	277 ±15%	320	OVR T2 40-320 C U	2CTB802348R3700
1	–	–	–	–	–	347 ±15%	440	OVR T2 40-440 C U	2CTB802348R3900
1	–	–	–	–	–	480 ±15%	550	OVR T2 40-550 C U	2CTB802348R4100
1	–	–	–	–	–	600 ±15%	660	OVR T2 40-660 C U	2CTB802348R4300
Type 2 - Pluggable - Split Phase networks									
2	–	15	5	–	0.6	120 ±15%	175	OVR T2 2L 15-150 P U	2CTB802343R0000
2	–	15	5	–	1	277 ±15%	320	OVR T2 2L 15-320 P U	2CTB802343R0400
3	–	15	5	–	0.7	120 ±15%	175	OVR T2 2N 15-150 P U	2CTB802344R0000
3	–	15	5	–	1.1	277 ±15%	320	OVR T2 2N 15-320 P U	2CTB802344R0400
2	–	40	20	–	0.6	120 ±15%	175	OVR T2 2L 40-150 P TS U	2CTB802343R2100
2	–	40	20	–	1	277 ±15%	320	OVR T2 2L 40-320 P TS U	2CTB802343R2500
3	–	40	20	–	0.7	120 ±15%	175	OVR T2 2N 40-150 P TS U	2CTB802344R2100
3	–	40	20	–	1.1	277 ±15%	320	OVR T2 2N 40-320 P TS U	2CTB802344R2500
3	–	40	10	–	1.4	347 ±15%	440	OVR T2 2N 40-440 P TS U	2CTB802344R2900
3	–	40	10	–	1.8	480 ±15%	550	OVR T2 2N 40-550 P TS U	2CTB802344R3300
3	–	40	10	–	2	600 ±15%	660	OVR T2 2N 40-660 P TS U	2CTB802344R3700
Cartridges									
1	–	–	–	–	–	120 ±15%	175	OVR T2 15-150 C U	2CTB802348R2500
1	–	–	–	–	–	277 ±15%	320	OVR T2 15-320 C U	2CTB802348R2700
1	–	–	–	–	–	120 ±15%	175	OVR T2 40-150 C U	2CTB802348R3500
1	–	–	–	–	–	277 ±15%	320	OVR T2 40-320 C U	2CTB802348R3700
1	–	–	–	–	–	347 ±15%	440	OVR T2 40-440 C U	2CTB802348R3900
1	–	–	–	–	–	480 ±15%	550	OVR T2 40-550 C U	2CTB802348R4100
Type 2 - Pluggable - Grounded Wye networks									
3	–	15	5	–	0.6	120 ±15%	175	OVR T2 3L 15-150 P U	2CTB802345R0000
4	–	15	5	–	0.6	120 ±15%	175	OVR T2 3N 15-150 P U	2CTB802346R0000
4	–	15	5	–	1.2	277 ±15%	320	OVR T2 3N 15-320 P U	2CTB802346R0400
3	–	40	20	–	0.6	120 ±15%	175	OVR T2 3L 40-150 P TS U	2CTB802345R2100
3	–	40	10	–	1.3	347 ±15%	440	OVR T2 3L 40-440 P TS U	2CTB802345R2900
4	–	40	20	–	1.2	120 ±15%	175	OVR T2 3N 40-150 P TS U	2CTB802346R2100
4	–	40	20	–	1.2	277 ±15%	320	OVR T2 3N 40-320 P TS U	2CTB802346R2500
4	–	40	10	–	1.2	347 ±15%	440	OVR T2 3N 40-440 P TS U	2CTB802346R2900
4	–	40	10	–	1.2	480 ±15%	550	OVR T2 3N 40-550 P TS U	2CTB802346R3300
4	–	40	10	–	1.2	600 ±15%	660	OVR T2 3N 40-660 P TS U	2CTB802346R3700
Cartridges									
1	–	–	–	–	–	120 ±15%	175	OVR T2 15-150 C U	2CTB802348R2500
1	–	–	–	–	–	120 ±15%	175	OVR T2 40-150 C U	2CTB802348R3500
1	–	–	–	–	–	347 ±15%	440	OVR T2 40-440 C U	2CTB802348R3900
1	–	–	–	–	–	277 ±15%	320	OVR T2 15-320 C U	2CTB802348R2700
1	–	–	–	–	–	277 ±15%	320	OVR T2 40-320 C U	2CTB802348R3700
1	–	–	–	–	–	480 ±15%	550	OVR T2 40-550 C U	2CTB802348R4100
1	–	–	–	–	–	600 ±15%	660	OVR T2 40-660 C U	2CTB802348R4300

Protection and safety

OVR Type 2 surge protective devices - Single pole



OVR T2 40-150 P U



OVR T2 40-440 P TS U



OVR T2 70 N P U

Descripiton

Single pole devices provide great flexibility for any kind of network configuration.
OVR T2 devices provide the best protection as they are designed to protect electric installations and sensitive equipment against indirect surges with ensuring a low protection level (VPR). They are characterized by their capacity to safely discharge current with 8/20 µs wave form.

Ordering details

Pro-tected lines	Max dis-charge current Imax 8/20	Nomi-nal dis-charge current In	Voltage protec-tion rating VPR	Nominal voltage Un	Max. cont. operat-ing voltage MCOV	Bbn 3660308	Order details		Weight Pkg (1 pce)
	kA	kA	kV	V	V	EAN	Type code	Order code	kg
Pluggable									
1	15	5	0.6	120	150	518514	OVR T2 15-150 P U	2CTB802341R0000	0.12
1	15	5	1	277 ±15%	320	518521	OVR T2 15-320 P U	2CTB802341R0400	0.12
1	40	20	0.6	120	150	518958	OVR T2 40-150 P U	2CTB802341R2000	0.12
1	40	20	0.6	120	150	518958	OVR T2 40-150 P TS U	2CTB802341R2100	0.12
1	40	20	1	277 ±15%	320	518965	OVR T2 40-320 P U	2CTB802341R2400	0.12
1	40	20	1	277 ±15%	320	518545	OVR T2 40-320 P TS U	2CTB802341R2500	0.12
1	40	10	1.3	347 ±15%	440	518552	OVR T2 40-440 P TS U	2CTB802341R2900	0.12
1	40	10	1.7	480 ±15%	550	518569	OVR T2 40-550 P TS U	2CTB802341R3300	0.12
1	40	10	1.9	600 ±15%	660	518576	OVR T2 40-660 P TS U	2CTB802341R3700	0.12
Neutral - Pluggable									
1	70	20	1.2	230	275	518583	OVR T2 70 N P U	2CTB802341R8000	0.12

Protection and safety

OVR Type 2 surge protective devices - Single phase networks



OVR T2 1N 40-150 P U



OVR T2 1N 40-660 P TS U

Description

Single phase devices are composed by a MOV pole plus a spark gap one. The spark gap pole guarantees the lowest voltage protection rating and has to be connected to the Neutral.
OVR T2 devices provide the best protection as they are designed to protect electric installations and sensitive equipment against indirect surges with ensuring a low protection level (VPR). They are characterized by their capacity to safely discharge current with 8/20 µs wave form.

Ordering details

Protected lines	Max discharge current Imax 8/20	Nominal discharge current In	Voltage protection rating VPR	Nominal voltage Un	Max. cont. operating voltage MCOV, Uc	Bbn 3660308	Order details		Weight Pkg (1 pce)
	kA	kA	kV	V	V	EAN	Type code	Order code	kg
Pluggable									
2	15	5	1.2	120	150	519238	OVR T2 1N 15-150 P U	2CTB802342R0000	0.24
2	15	5	1.2	277	320	519245	OVR T2 1N 15-320 P U	2CTB802342R0400	0.24
2	40	20	1.2	120	150	520869	OVR T2 1N 40-150 P U	2CTB802342R2000	0.24
2	40	20	1.2	120	150	520876	OVR T2 1N 40-150 P U (x10)	2CTB802342R8000	0.24
2	40	20	1.2	120	150	819252	OVR T2 1N 40-150 P TS U	2CTB802342R2100	0.24
2	40	20	1.2	277	320	519269	OVR T2 1N 40-320 P TS U	2CTB802342R2500	0.24
2	40	10	1.2	347	440	519276	OVR T2 1N 40-440 P TS U	2CTB802342R2900	0.24
2	40	10	1.2	480	550	519283	OVR T2 1N 40-550 P TS U	2CTB802342R3300	0.24
2	40	10	1.2	600	660	519290	OVR T2 1N 40-660 P TS U	2CTB802342R3700	0.24

(x10) packaging of 10 pieces.

Protection and safety

OVR Type 2 surge protective devices - Single pole





Type			**OVR T2 15-150 P U**	**OVR T2 15-320 P U**	**OVR T2 40-150 P U**
with auxiliary contact (TS)			**–**	**–**	**OVR T2 40-150 P TS U**
Technology			Varistor	Varistor	Varistor
Electrical features					
Standard			UL 1449	UL 1449	UL 1449
Type / test class (UL 1449)			1	1	1
Protected lines			1	1	1
System network			–	–	–
Type of current / frequency			AC 47-63 Hz	AC 47-63 Hz	AC 47-63 Hz
Voltage regulation of the system network			±15%	±15%	±15%
Nominal system voltage Un			120 V	277 V	120 V
Maximum continuous operating voltage MCOV			150 V	320 V	150 V
Maximal discharge current (8/20) Imax			15 kA	15 kA	40 kA
Nominal discharge current (8/20) In			5 kA	5 kA	20 kA
Voltage protection rating (L-N / N-G / L-G) VPR			0.6 kV	1 kV	0.6 kV
Response time			< 25 ns	< 25 ns	< 25 ns
Short circuit withstand SCCR			200 kA	200 kA	200 kA
Back up protection maximum rating	fuse (gG - gL)		≤ 100 A	≤ 100 A	≤ 100 A
	circuit breaker (B or C Curve)		≤ 125 A	≤ 125 A	≤ 125 A
Pluggable cartridges			Yes	Yes	Yes
Integrated QuickSafe® technology			Yes	Yes	Yes
State indicator			Yes	Yes	Yes
Safety reserve			–	–	–
Auxiliary contact (TS)			No	No	Yes (TS option)
Installation					
Wire range (L,N,PE)	solid wire		2.5…25 / 4…14 mm²	2.5…25 / 4…14 mm²	2.5…25 / 4…14 mm²
	stranded wire		2.5…16 / 6…14 mm²	2.5…16 / 6…14 mm²	2.5…16 / 6…14 mm²
Stripping length (L,N,PE)			12.5 / 0.5 mm	12.5 / 0.5 mm	12.5 / 0.5 mm
Tightening torque (L,N,PE)			2.8 / 24.5 Nm	2.8 / 24.5 Nm	2.8 / 24.5 Nm
Auxiliary contact (TS)					
Contact information			–	–	1 NO – 1 NC
Min. load			–	–	12 V DC – 10 mA
Max. load			–	–	250 V AC – 1 A
Connection cross section			–	–	1.5 / 16 mm²
Miscellaneous characteristics					
Stocking temperature			-40…+80 °C	-40…+80 °C	-40…+80 °C
Maximal Altitude			5 000 m	5 000 m	5 000 m
Operating temperature			-40…+176 °C	-40…+176 °C	-40…+176 °C
Degree of protection			NEMA 1	NEMA 1	NEMA 1
Fire resistance according to UL 94			V0	V0	V0
Dimensions	mm	h x w x d	88 x 17.8 x 64.8 mm	88 x 17.8 x 64.8 mm	88 x 17.8 x 64.8 mm
	inches	h x w x d	3.46 x 0.7 x 2.55 in	3.46 x 0.7 x 2.55 in	3.46 x 0.7 x 2.55 in
Dimensions with auxiliary contact (TS)	mm	h x w x d	–	–	96 x 17.8 x 64.8 mm
	inches	h x w x d	–	–	3.78 x 0.7 x 2.55 in
Replacement cartridges					
Phase product ID	Type		OVR T2 15-150 C U	OVR T2 15-320 C U	OVR T2 40-150 C U
	Order code		2CTB802348R2500	2CTB802348R2700	2CTB802348R3500
Neutral product ID	Type		–	–	–
	Order code		–	–	–

Protection and safety

OVR Type 2 surge protective devices - Single pole







OVR T2 40-320 P U	**–**	**–**	**–**	**OVR T2 70 N P U**
OVR T2 40-320 P TS U	**OVR T2 40-440 P TS U**	**OVR T2 40-550 P TS U**	**OVR T2 40-660 P TS U**	**–**
Varistor	Varistor	Varistor	Varistor	Spark gap
UL 1449	UL 1449	UL 1449	UL 1449	UL 1449
1	1	1	4	4
1	1	1	1	1
–	–	–	–	–
AC 47-63 Hz	AC 47-63 Hz	AC 47-63 Hz	AC 47-63 Hz	AC 47-63 Hz
±15%	±15%	±15%	±15%	+15%
277 V	347 V	480 V	600 V	230 V
320 V	440 V	550 V	660 V	275 V
40 kA	40 kA	40 kA	40 kA	70 kA
20 kA	10 kA	10 kA	10 kA	20 kA
1 kV	1.3 kV	1.7 kV	1.9 kV	1.2 kV
< 25 ns	< 25 ns	< 25 ns	< 25 ns	< 25 ns
200 kA	200 kA	200 kA	200 kA	200 kA
≤ 100 A	≤ 100 A	≤ 100 A	≤ 100 A	≤ 100 A
≤ 125 A	≤ 125 A	≤ 125 A	≤ 125 A	≤ 125 A
Yes	Yes	Yes	Yes	Yes
Yes	Yes	Yes	Yes	No
Yes	Yes	Yes	Yes	Yes
–	–	–	–	–
Yes (TS option)	Yes	Yes	Yes	No
2.5…25 / 4…14 mm²	2.5…25 / 4…14 mm²	2.5…25 / 4…14 mm²	2.5…25 / 4…14 mm²	2.5…25 / 4…14 mm²
2.5…16 / 6…14 mm²	2.5…16 / 6…14 mm²	2.5…16 / 6…14 mm²	2.5…16 / 6…14 mm²	2.5…16 / 6…14 mm²
12.5 / 0.5 mm	12.5 / 0.5 mm	12.5 / 0.5 mm	12.5 / 0.5 mm	12.5 / 0.5 mm
2.8 / 24.5 Nm	2.8 / 24.5 Nm	2.8 / 24.5 Nm	2.8 / 24.5 Nm	2.8 / 24.5 Nm
1 NO – 1 NC	1 NO – 1 NC	1 NO – 1 NC	1 NO – 1 NC	–
12 V DC – 10 mA	12 V DC – 10 mA	12 V DC – 10 mA	12 V DC – 10 mA	–
250 V AC – 1 A	250 V AC – 1 A	250 V AC – 1 A	250 V AC – 1 A	–
1.5 / 16 mm²	1.5 / 16 mm²	1.5 / 16 mm²	1.5 / 16 mm²	–
-40…+80 °C	-40…+80 °C	-40…+80 °C	-40…+80 °C	-40…+80 °C
5 000 m	5 000 m	5 000 m	5 000 m	5 000 m
-40…+176 °C	-40…+176 °C	-40…+176 °C	-40…+176 °C	-40…+176 °C
NEMA 1	NEMA 1	NEMA 1	NEMA 1	NEMA 1
V0	V0	V0	V0	V0
88 x 17.8 x 64.8 mm	–	–	–	88 x 17.8 x 64.8 mm
3.46 x 0.7 x 2.55 in	–	–	–	3.46 x 0.7 x 2.55 in
96 x 17.8 x 64.8 mm	96 x 17.8 x 64.8 mm	96 x 17.8 x 64.8 mm	96 x 17.8 x 64.8 mm	–
3.78 x 0.7 x 2.55 in	3.78 x 0.7 x 2.55 in	3.78 x 0.7 x 2.55 in	3.78 x 0.7 x 2.55 in	–
OVR T2 40-320 C U	OVR T2 40-440 C U	OVR T2 40-550 C U	OVR T2 40-660 C U	–
2CTB802348R3700	2CTB802348R3900	2CTB802348R4100	2CTB802348R4300	–
–	–	–	–	OVR T2 70 N C U
–	–	–	–	2CTB802348R6500

Protection and safety

OVR Type 2 surge protective devices - Single phase networks







General technical data

Type			OVR T2 1N 15-150 P U	OVR T2 1N 15-320 P U	OVR T2 1N 40-150 P U
with auxiliary contact (TS)			–	–	OVR T2 1N 40-150 P TS U
Electrical features					
Standards			UL 1449	UL 1449	UL 1449
Type / test class (UL 1449)			4	4	4
Protected lines			2	2	2
Type of current / frequency			AC 47-63 Hz	AC 47-63 Hz	AC 47-63 Hz
Voltage regulation of the system network			±15%	±15%	±15%
Nominal system voltage Un			120 V	277 V	120 V
Maximum continuous operating voltage MCOV			150 V	320 V	150 V
Maximal discharge current (8/20) Imax			15 kA	15 kA	40 kA
Nominal discharge current (8/20) In			5 kA	5 kA	20 kA
Voltage protection rating (L-N / N-G / L-G) VPR			1.2 kV	1.2 kV	1.2 kV
Response time			< 25 ns	< 25 ns	< 25 ns
Short circuit withstand	SCCR		200 kA	200 kA	200 kA
Back up protection maximum rating	fuse (gG - gL)		≤ 100 A	≤ 100 A	≤ 100 A
	circuit breaker (B or C curve)		≤ 125 A	≤ 125 A	≤ 125 A
Pluggable cartridges			Yes	Yes	Yes
Integrated QuickSafe® technology			Yes	Yes	Yes
State indicator			Yes	Yes	Yes
Safety reserve			–	–	–
Auxiliary contact (TS)			No	No	Yes (TS option)
Installation					
Wire range (L,N,PE)	solid wire		2.5…25 / 4…14 mm²	2.5…25 / 4…14 mm²	2.5…25 / 4…14 mm²
	stranded wire		2.5…16 / 6…14 mm²	2.5…16 / 6…14 mm²	2.5…16 / 6…14 mm²
Stripping length (L,N,PE)			12.5 / 0.5 mm	12.5 / 0.5 mm	12.5 / 0.5 mm
Tightening torque (L,N,PE)			2.8 / 24.5 Nm	2.8 / 24.5 Nm	2.8 / 24.5 Nm
Auxiliary contact (TS)					
Contact information					2 NO – 2 NC
Min. load					12 V DC – 10 mA
Max. load					250 V AC – 1 A
Connection cross section					1.5 / 16 mm²
Miscellaneous characteristics					
Stocking temperature			-40...+80 °C	-40...+80 °C	-40...+80 °C
Maximal Altitude			5 000 m	5 000 m	5 000 m
Operating temperature			-40...+176 °C	-40...+176 °C	-40...+176 °C
Degree of protection			NEMA 1	NEMA 1	NEMA 1
Fire resistance according to UL 94			V0	V0	V0
Dimensions	mm	h x w x d	90.5 x 35.6 x 64.8 mm	90.5 x 35.6 x 64.8 mm	90.5 x 35.6 x 64.8 mm
	inches	h x w x d	3.56 x 1.4 x 2.55 in	3.56 x 1.4 x 2.55 in	3.56 x 1.4 x 2.55 in
Dimensions with auxiliary contact (TS)	mm	h x w x d	–	–	98.5 x 35.6 x 64.8 mm
	inches	h x w x d	–	–	3.88 x 1.4 x 2.55 in
Replacement cartridges					
Phase product ID	Type		OVR T2 15-150 C U	OVR T2 15-320 C U	OVR T2 40-150 C U
	Order code		2CTB802348R2500	2CTB802348R2700	2CTB802348R3500
Neutral product ID	Type		OVR T2 70 N C U	OVR T2 70 N C U	OVR T2 70 N C U
	Order code		2CTB802348R6500	2CTB802348R6500	2CTB802348R6500

Protection and safety

OVR Type 2 surge protective devices - Single phase networks






–	–	–	–
OVR T2 1N 40-320 P TS U	**OVR T2 1N 40-440 P TS U**	**OVR T2 1N 40-550 P TS U**	**OVR T2 1N 40-660 P TS U**
UL 1449	UL 1449	UL 1449	UL 1449
4	4	4	4
2	2	2	2
AC 47-63 Hz	AC 47-63 Hz	AC 47-63 Hz	AC 47-63 Hz
±15%	±15%	±15%	±15%
277 V	347 V	480 V	600 V
320 V	440 V	550 V	660 V
40 kA	40 kA	40 kA	40 kA
20 kA	10 kA	10 kA	10 kA
1.2 kV	1.2 kV	1.2 kV	1.2 kV
< 25 ns	< 25 ns	< 25 ns	< 25 ns
200 kA	200 kA	200 kA	200 kA
≤ 100 A	≤ 100 A	≤ 100 A	≤ 100 A
≤ 125 A	≤ 125 A	≤ 125 A	≤ 125 A
Yes	Yes	Yes	Yes
Yes	Yes	Yes	Yes
Yes	Yes	Yes	Yes
–	–	–	–
Yes	Yes	Yes	Yes
2.5…25 / 4…14 mm²	2.5…25 / 4…14 mm²	2.5…25 / 4…14 mm²	2.5…25 / 4…14 mm²
2.5…16 / 6…14 mm²	2.5…16 / 6…14 mm²	2.5…16 / 6…14 mm²	2.5…16 / 6…14 mm²
12.5 / 0.5 mm	12.5 / 0.5 mm	12.5 / 0.5 mm	12.5 / 0.5 mm
2.8 / 24.5 Nm	2.8 / 24.5 Nm	2.8 / 24.5 Nm	2.8 / 24.5 Nm
2 NO – 2 NC	2 NO – 2 NC	2 NO – 2 NC	2 NO – 2 NC
12 V DC – 10 mA	12 V DC – 10 mA	12 V DC – 10 mA	12 V DC – 10 mA
250 V AC – 1 A	250 V AC – 1 A	250 V AC – 1 A	250 V AC – 1 A
1.5 / 16 mm²	1.5 / 16 mm²	1.5 / 16 mm²	1.5 / 16 mm²
-40...+80 °C	-40...+80 °C	-40...+80 °C	-40...+80 °C
5 000 m	5 000 m	5 000 m	5 000 m
-40...+176 °C	-40...+176 °C	-40...+176 °C	-40...+176 °C
NEMA 1	NEMA 1	NEMA 1	NEMA 1
V0	V0	V0	V0
–	–	–	–
–	–	–	–
98.5 x 35.6 x 64.8 mm	98.5 x 35.6 x 64.8 mm	98.5 x 35.6 x 64.8 mm	98.5 x 35.6 x 64.8 mm
3.88 x 1.4 x 2.55 in	3.88 x 1.4 x 2.55 in	3.88 x 1.4 x 2.55 in	3.88 x 1.4 x 2.55 in
OVR T2 40-320 C U	OVR T2 40-440 C U	OVR T2 40-550 C U	OVR T2 40-660 C U
2CTB802348R3700	2CTB802348R3900	2CTB802348R4100	2CTB802348R4300
OVR T2 70 N C U	OVR T2 70 N C U	OVR T2 70 N C U	OVR T2 70 N C U
2CTB802348R6500	2CTB802348R6500	2CTB802348R6500	2CTB802348R6500

Protection and safety

OVR Type 2 surge protective devices - Delta networks



OVR T2 3L 15-320 P U



OVR T2 3L 40-320 P TS U

Description

Delta devices provide the protection required by the three phases of a Delta network system.
OVR T2 devices provide the best protection as they are designed to protect electric installations and sensitive equipment against indirect surges with ensuring a low protection level (VPR). They are characterized by their capacity to safely discharge current with 8/20 µs wave form.

Ordering details

Protected lines	Max discharge current Imax 8/20	Nominal discharge current In	Voltage protection rating VPR	Nominal voltage Un	Max. cont. operating voltage MCOV, Uc	Bbn 3660308	Order details		Weight Pkg (1 pce)
	kA	kA	kV	V	V	EAN	Type code	Order code	kg
Pluggable									
3	15	5	1	277 ±15%	320	518644	OVR T2 3L 15-320 P U	2CTB802345R0400	0.36
3	40	20	1	277 ±15%	320	518668	OVR T2 3L 40-320 P TS U	2CTB802345R2500	0.36
3	40	10	1.7	480 ±15%	550	518682	OVR T2 3L 40-550 P TS U	2CTB802345R3300	0.36

Protection and safety

OVR Type 2 surge protective devices - Delta networks





General technical data

Type			**OVR T2 3L 15-320 P U**	**–**	**–**
with auxiliary contact (TS)			**–**	**OVR T2 3L 40-320 P TS U**	**OVR T2 3L 40-550 P TS U**
Electrical features					
Standards			UL 1449	UL 1449	UL 1449
Type / test class (UL 1449)			1	1	1
Protected lines			3	3	3
Type of current / frequency			AC 47-63 Hz	AC 47-63 Hz	AC 47-63 Hz
Voltage regulation of the system network			±15%	±15%	±15%
Nominal system voltage Un			277 V	277 V	480 V
Maximum continuous operating voltage MCOV			320 V	320 V	550 V
Maximal discharge current (8/20) Imax			15 kA	40 kA	40 kA
Nominal discharge current (8/20) In			5 kA	20 kA	10 kA
Voltage protection rating (L-N / N-G / L-G) VPR			1 kV	1 kV	1.7 kV
Response time			< 25 ns	< 25 ns	< 25 ns
Short circuit withstand	SCCR		200 kA	200 kA	200 kA
Back up protection maximum rating	fuse (gG - gL)		≤ 100 A	≤ 100 A	≤ 100 A
	circuit breaker (B or C curve)		≤ 125 A	≤ 125 A	≤ 125 A
Pluggable cartridges			Yes	Yes	Yes
Integrated QuickSafe® technology			Yes	Yes	Yes
State indicator			Yes	Yes	Yes
Safety reserve			–	–	–
Auxiliary contact (TS)			No	Yes	Yes
Installation					
Wire range (L,N,PE)	solid wire		2.5…25 / 4…14 mm²	2.5…25 / 4…14 mm²	2.5…25 / 4…14 mm²
	stranded wire		2.5…16 / 6…14 mm²	2.5…16 / 6…14 mm²	2.5…16 / 6…14 mm²
Stripping length (L,N,PE)			12.5 / 0.5 mm	12.5 / 0.5 mm	12.5 / 0.5 mm
Tightening torque (L,N,PE)			2.8 / 24.5 Nm	2.8 / 24.5 Nm	2.8 / 24.5 Nm
Auxiliary contact (TS)					
Contact information			–	3 NO – 3 NC	3 NO – 3 NC
Min. load			–	12 V DC – 10 mA	12 V DC – 10 mA
Max. load			–	250 V AC – 1 A	250 V AC – 1 A
Connection cross section			–	1.5 / 16 mm²	1.5 / 16 mm²
Miscellaneous characteristics					
Stocking temperature			-40...+80 °C	-40...+80 °C	-40...+80 °C
Maximal Altitude			5 000 m	5 000 m	5 000 m
Operating temperature			-40...+176 °C	-40...+176 °C	-40...+176 °C
Degree of protection			NEMA 1	NEMA 1	NEMA 1
Fire resistance according to UL 94			V0	V0	V0
Dimensions	mm	h x w x d	90.5 x 53.4 x 64.8 mm	–	–
	inches	h x w x d	3.56 x 2.1 x 2.55 in	–	–
Dimensions with auxiliary contact (TS)	mm	h x w x d	–	98.5 x 53.4 x 64.8 mm	98.5 x 53.4 x 64.8 mm
	inches	h x w x d	–	3.88 x 2.1 x 2.55 in	3.88 x 2.1 x 2.55 in
Replacement cartridges					
Phase product ID	Type		OVR T2 15-320 C U	OVR T2 40-320 C U	OVR T2 40-550 C U
	Order code		2CTB802348R2700	2CTB802348R3700	2CTB802348R4100
Neutral product ID	Type		–	–	–
	Order code		–	–	–

Protection and safety

OVR Type 2 surge protective devices - Split phase networks



OVR T2 2L 15-320 P U



OVR T2 2L 40-320 P TS U



OVR T2 2N 15-320 P U



OVR T2 2N 40-440 P TS U

Description

Split phase devices are composed by two MOV poles or two MOV poles plus a spark gap one, depending on the number of lines the customer wants to pretect.The spark gap pole guarantees the lowest voltage protection rating and has to be connected to the neutral.
OVR T2 devices provide the best protection as they are designed to protect electric installations and sensitive equipment against indirect surges with ensuring a low protection level (VPR). They are characterized by their capacity to safely discharge current with 8/20 µs wave form.

Ordering details

Protected lines	Max discharge current Imax 8/20	Nominal discharge current In	Voltage protection rating VPR	Nominal voltage Un	Max. cont. operating voltage MCOV, Uc	Bbn 3660308	Order details		Weight Pkg (1 pce)
	kA	kA	kV	V	V	EAN	Type code	Order code	kg
Pluggable									
2	15	5	0.6	120 ±15%	175	518590	OVR T2 2L 15-150 P U	2CTB802343R0000	0.24
2	15	5	1	277 ±15%	320	518606	OVR T2 2L 15-320 P U	2CTB802343R0400	0.24
2	40	20	0.6	120 ±15%	175	518613	OVR T2 2L 40-150 P TS U	2CTB802343R2100	0.24
2	40	20	1	277 ±15%	320	518620	OVR T2 2L 40-320 P TS U	2CTB802343R2500	0.24
3	15	5	0.7	120 ±15%	175	519306	OVR T2 2N 15-150 P U	2CTB802344R0000	0.36
3	15	5	1.1	277 ±15%	320	519313	OVR T2 2N 15-320 P U	2CTB802344R0400	0.36
3	40	20	0.7	120 ±15%	175	519320	OVR T2 2N 40-150 P TS U	2CTB802344R2100	0.36
3	40	20	1.1	277 ±15%	320	519337	OVR T2 2N 40-320 P TS U	2CTB802344R2500	0.36
3	40	10	1.4	347 ±15%	440	519344	OVR T2 2N 40-440 P TS U	2CTB802344R2900	0.36
3	40	10	1.8	480 ±15%	550	519351	OVR T2 2N 40-550 P TS U	2CTB802344R3300	0.36
3	40	10	2	600 ±15%	660	519368	OVR T2 2N 40-660 P TS U	2CTB802344R3700	0.36

Protection and safety

OVR Type 2 surge protective devices - Grounded Wye networks



OVR T2 3L 40-440 P TS U

Description

Wye devices are composed by three MOV poles or three MOV poles plus a spark gap one, depending on the number of lines the customer wants to protect. The spark gap pole guarantees the lowest voltage protection rating and has to be connected to the Neutral.
OVR T2 devices provide the best protection as they are designed to protect electric installations and sensitive equipment against indirect surges with ensuring a low protection level (VPR). They are characterized by their capacity to safely discharge current with 8/20 µs wave form.

Ordering details

Protected lines	Max discharge current Imax 8/20	Nominal discharge current In	Voltage protection rating VPR	Nominal voltage Un	Max. cont. operating voltage MCOV, Uc	Bbn 3660308	Order details		Weight Pkg (1 pce)
	kA	kA	kV	V	V	EAN	Type code	Order code	kg
Pluggable									
3	15	5	0.6	120 ±15%	175	518637	OVR T2 3L 15-150 P U	2CTB802345R0000	0.36
3	40	20	0.6	120 ±15%	175	518651	OVR T2 3L 40-150 P TS U	2CTB802345R2100	0.36
4	15	5	1.2	120 ±15%	175	518699	OVR T2 3N 15-150 P U	2CTB802346R0000	0.48
4	15	5	1.2	277 ±15%	320	518705	OVR T2 3N 15-320 P U	2CTB802346R0400	0.48
4	40	20	1.2	120 ±15%	175	518712	OVR T2 3N 40-150 P TS U	2CTB802346R2100	0.48
4	40	20	1.2	277 ±15%	320	518729	OVR T2 3N 40-320 P TS U	2CTB802346R2500	0.48
4	40	10	1.2	347 ±15%	440	518736	OVR T2 3N 40-440 P TS U	2CTB802346R2900	0.48
4	40	10	1.2	480 ±15%	550	518743	OVR T2 3N 40-550 P TS U	2CTB802346R3300	0.48
4	40	10	1.2	600 ±15%	660	518750	OVR T2 3N 40-660 P TS U	2CTB802346R3700	0.48

Protection and safety

OVR Type 2 surge protective devices - Split phase networks







General technical data

Type			**OVR T2 2L 15-150 P U**	**OVR T2 2L 15-320 P U**	**–**	**–**	**OVR T2 2N 15-150 P U**
with auxiliary contact (TS)			**–**	**–**	**OVR T2 2L 40-150 P TS U**	**OVR T2 2L 40-320 P TS U**	**–**
Electrical features							
Standards			UL 1449	UL 1449	UL 1449	UL 1449	UL 1449
Type / test class (UL 1449)			1	1	1	1	4
Protected lines			2	2	2	2	3
Type of current / frequency			AC 47-63 Hz	AC 47-63 Hz	AC 47-63 Hz	AC 47-63 Hz	AC 47-63 Hz
Voltage regulation of the system network			±15%	±15%	±15%	±15%	±15%
Nominal system voltage Un			120 V	277 V	120 V	277 V	120 V
Maximum continuous operating voltage MCOV			175 V	320 V	175 V	320 V	175 V
Maximal discharge current (8/20) Imax			15 kA	15 kA	40 kA	40 kA	15 kA
Nominal discharge current (8/20) In			5 kA	5 kA	20 kA	20 kA	5 kA
Voltage protection rating (L-N / N-G / L-G) VPR			0.6 kV	1 kV	0.6 kV	1 kV	0.7 kV
Response time			< 25 ns	< 25 ns	< 25 ns	< 25 ns	< 25 ns
Short circuit withstand SCCR			200 kA	200 kA	200 kA	200 kA	200 kA
Back up protection maximum rating	fuse (gG - gL)		≤ 100 A	≤ 100 A	≤ 100 A	≤ 100 A	≤ 100 A
	circuit breaker (B or C curve)		≤ 125 A	≤ 125 A	≤ 125 A	≤ 125 A	≤ 125 A
Pluggable cartridges			Yes	Yes	Yes	Yes	Yes
Integrated QuickSafe® technology			Yes	Yes	Yes	Yes	Yes
State indicator			Yes	Yes	Yes	Yes	Yes
Safety reserve			–	–	–	–	–
Auxiliary contact (TS)			No	No	Yes	Yes	No
Installation							
Wire range (L,N,PE)	solid wire		2.5…25 / 4…14 mm²	2.5…25 / 4…14 mm²	2.5…25 / 4…14 mm²	2.5…25 / 4…14 mm²	2.5…25 / 4…14 mm²
	stranded wire		2.5…16 / 6…14 mm²	2.5…16 / 6…14 mm²	2.5…16 / 6…14 mm²	2.5…16 / 6…14 mm²	2.5…16 / 6…14 mm²
Stripping length (L,N,PE)			12.5 / 0.5	12.5 / 0.5	12.5 / 0.5	12.5 / 0.5	12.5 / 0.5
Tightening torque (L,N,PE)			2.8 / 24.5 Nm	2.8 / 24.5 Nm	2.8 / 24.5 Nm	2.8 / 24.5 Nm	2.8 / 24.5 Nm
Auxiliary contact (TS)							
Contact information			–	–	2 NO – 2 NC	2 NO – 2 NC	–
Min. load			–	–	12 V DC – 10 mA	12 V DC – 10 mA	–
Max. load			–	–	250 V AC – 1 A	250 V AC – 1 A	–
Connection cross section			–	–	1.5 / 16 mm²	1.5 / 16 mm²	–
Miscellaneous characteristics							
Stocking temperature			-40...+80 °C	-40...+80 °C	-40...+80 °C	-40...+80 °C	-40...+80 °C
Maximal Altitude			5 000 m	5 000 m	5 000 m	5 000 m	5 000 m
Operating temperature			-40...+176 °C	-40...+176 °C	-40...+176 °C	-40...+176 °C	-40...+176 °C
Degree of protection			NEMA 1	NEMA 1	NEMA 1	NEMA 1	NEMA 1
Fire resistance according to UL 94			V0	V0	V0	V0	V0
Dimensions	mm	h x w x d	90.5 x 35.6 x 64.8 mm	90.5 x 35.6 x 64.8 mm	–	–	90.5 x 53.4 x 64.8 mm
	inches	h x w x d	3.56 x 1.4 x 2.55 in	3.56 x 1.4 x 2.55 in	–	–	3.56 x 2.1 x 2.55 in
Dimensions with auxiliary contact (TS)	mm	h x w x d	–	–	98.5 x 35.6 x 64.8 mm	98.5 x 35.6 x 64.8 mm	–
	inches	h x w x d	–	–	3.88 x 1.4 x 2.55 in	3.88 x 1.4 x 2.55 in	–
Replacement cartridges			–	–	–	–	–
Phase product ID	Type		OVR T2 15-150 C U	OVR T2 15-320 C U	OVR T2 40-150 C U	OVR T2 40-320 C U	OVR T2 15-150 C U
	Order code		2CTB802348R2500	2CTB802348R2700	2CTB802348R3500	2CTB802348R3700	2CTB802348R2500
Neutral product ID	Type		–	–	–	–	OVR T2 70 N C U
	Order code		–	–	–	–	2CTB802348R6500

Protection and safety

OVR Type 2 surge protective devices - Split phase networks



OVR T2 2N 15-320 P U	–	–	–	–	–
–	**OVR T2 2N 40-150 P TS U**	**OVR T2 2N 40-320 P TS U**	**OVR T2 2N 40-440 P TS U**	**OVR T2 2N 40-550 P TS U**	**OVR T2 2N 40-660 P TS U**
UL 1449	UL 1449	UL 1449	UL 1449	UL 1449	UL 1449
4	4	4	4	4	4
3	3	3	3	3	3
AC 47-63 Hz	AC 47-63 Hz	AC 47-63 Hz	AC 47-63 Hz	AC 47-63 Hz	AC 47-63 Hz
±15%	±15%	±15%	±15%	±15%	±15%
277 V	120 V	277 V	347 V	480 V	600 V
320 V	175 V	320 V	440 V	550 V	660 V
15 kA	40 kA	40 kA	40 kA	40 kA	40 kA
5 kA	20 kA	20 kA	10 kA	10 kA	10 kA
1.1 kV	0.7 kV	1.1 kV	1.4 kV	1.8 kV	2 kV
< 25 ns	< 25 ns	< 25 ns	< 25 ns	< 25 ns	< 25 ns
200 kA	200 kA	200 kA	200 kA	200 kA	200 kA
≤ 100 A	≤ 100 A	≤ 100 A	≤ 100 A	≤ 100 A	≤ 100 A
≤ 125 A	≤ 125 A	≤ 125 A	≤ 125 A	≤ 125 A	≤ 125 A
Yes	Yes	Yes	Yes	Yes	Yes
Yes	Yes	Yes	Yes	Yes	Yes
Yes	Yes	Yes	Yes	Yes	Yes
–	–	–	–	–	–
No	Yes	Yes	Yes	Yes	Yes
2.5…25 / 4…14 mm²	2.5…25 / 4…14 mm²	2.5…25 / 4…14 mm²	2.5…25 / 4…14 mm²	2.5…25 / 4…14 mm²	2.5…25 / 4…14 mm²
2.5…16 / 6…14 mm²	2.5…16 / 6…14 mm²	2.5…16 / 6…14 mm²	2.5…16 / 6…14 mm²	2.5…16 / 6…14 mm²	2.5…16 / 6…14 mm²
12.5 / 0.5	12.5 / 0.5	12.5 / 0.5	12.5 / 0.5	12.5 / 0.5	12.5 / 0.5
2.8 / 24.5 Nm	2.8 / 24.5 Nm	2.8 / 24.5 Nm	2.8 / 24.5 Nm	2.8 / 24.5 Nm	2.8 / 24.5 Nm
–	3 NO – 3 NC	3 NO – 3 NC	3 NO – 3 NC	3 NO – 3 NC	3 NO – 3 NC
–	12 V DC – 10 mA	12 V DC – 10 mA	12 V DC – 10 mA	12 V DC – 10 mA	12 V DC – 10 mA
–	250 V AC – 1 A	250 V AC – 1 A	250 V AC – 1 A	250 V AC – 1 A	250 V AC – 1 A
–	1.5 / 16 mm²	1.5 / 16 mm²	1.5 / 16 mm²	1.5 / 16 mm²	1.5 / 16 mm²
-40…+80 °C	-40…+80 °C	-40…+80 °C	-40…+80 °C	-40…+80 °C	-40…+80 °C
5 000 m	5 000 m	5 000 m	5 000 m	5 000 m	5 000 m
-40…+176 °C	-40…+176 °C	-40…+176 °C	-40…+176 °C	-40…+176 °C	-40…+176 °C
NEMA 1	NEMA 1	NEMA 1	NEMA 1	NEMA 1	NEMA 1
V0	V0	V0	V0	V0	V0
90.5 x 53.4 x 64.8 mm	–	–	–	–	–
3.56 x 2.1 x 2.55 in	–	–	–	–	–
–	98.5 x 53.4 x 64.8 mm	98.5 x 53.4 x 64.8 mm	98.5 x 53.4 x 64.8 mm	98.5 x 53.4 x 64.8 mm	98.5 x 53.4 x 64.8 mm
–	3.88 x 2.1 x 2.55 in	3.88 x 2.1 x 2.55 in	3.88 x 2.1 x 2.55 in	3.88 x 2.1 x 2.55 in	3.88 x 2.1 x 2.55 in
–	**1 NO – 1 NC**	**1 NO – 1 NC**	**1 NO – 1 NC**	**1 NO – 1 NC**	**1 NO – 1 NC**
OVR T2 15-320 C U	OVR T2 40-150 C U	OVR T2 40-320 C U	OVR T2 40-440 C U	OVR T2 40-550 C U	OVR T2 40-660 C U
2CTB802348R2700	2CTB802348R3500	2CTB802348R3700	2CTB802348R3900	2CTB802348R4100	2CTB802348R4300
OVR T2 70 N C U	OVR T2 70 N C U	OVR T2 70 N C U	OVR T2 70 N C U	OVR T2 70 N C U	OVR T2 70 N C U
2CTB802348R6500	2CTB802348R6500	2CTB802348R6500	2CTB802348R6500	2CTB802348R6500	2CTB802348R6500

Protection and safety

OVR Type 2 surge protective devices - Grounded Wye networks





General technical data

Type			**OVR T2 3L 15-150 P U**	**–**	**OVR T2 3N 15-150 P U**	**OVR T2 3N 15-320 P U**
with auxiliary contact (TS)			**–**	**OVR T2 3L 40-150 P TS U**	**–**	**–**
Electrical features						
Standards			UL 1449	UL 1449	UL 1449	UL 1449
Type / test class (UL 1449)			1	1	4	4
Protected lines			3	3	4	4
Type of current / frequency			AC 47-63 Hz	AC 47-63 Hz	AC 47-63 Hz	AC 47-63 Hz
Voltage regulation of the system network			±15%	±15%	±15%	±15%
Nominal system voltage Un			120 V	120 V	120 V	277 V
Maximum continuous operating voltage MCOV			175 V	175 V	175 V	320 V
Maximal discharge current (8/20) Imax			15 kA	40 kA	15 kA	15 kA
Nominal discharge current (8/20) In			5 kA	10 kA	5 kA	5 kA
Voltage protection rating (L-N / N-G / L-G VPR)			0.6 kV	0.6 kV	0.6 kV	1 kV
Response time			< 25 ns	< 25 ns	< 25 ns	< 25 ns
Short circuit withstand	SCCR		200 kA	200 kA	200 kA	200 kA
Back up protection maximum rating	fuse (gG - gL)		≤ 100 A	≤ 100 A	≤ 100 A	≤ 100 A
	circuit breaker (B or C curve)		≤ 125 A	≤ 125 A	≤ 125 A	≤ 125 A
Pluggable cartridges			Yes	Yes	Yes	Yes
Integrated QuickSafe® technology			Yes	Yes	Yes	Yes
State indicator			Yes	Yes	Yes	Yes
Safety reserve			–	–	–	–
Auxiliary contact (TS)			No	Yes	No	No
Installation						
Wire range (L,N,PE)	solid wire		2.5...25 / 4...14 mm²	2.5...25 / 4...14 mm²	2.5...25 / 4...14 mm²	2.5...25 / 4...14 mm²
	stranded wire		2.5...16 / 6...14 mm²	2.5...16 / 6...14 mm²	2.5...16 / 6...14 mm²	2.5...16 / 6...14 mm²
Stripping length (L,N,PE)			12.5 / 0.5 mm	12.5 / 0.5 mm	12.5 / 0.5 mm	12.5 / 0.5 mm
Tightening torque (L,N,PE)			2.8 / 24.5 Nm	2.8 / 24.5 Nm	2.8 / 24.5 Nm	2.8 / 24.5 Nm
Auxiliary contact (TS)						
Contact information			–	4 NO – 4 NC	–	–
Min. load			–	12 V DC – 10 mA	–	–
Max. load			–	250 V AC – 1 A	–	–
Connection cross section			–	1.5 / 16 mm²	–	–
Miscellaneous characteristics						
Stocking temperature			-40...+80 °C	-40...+80 °C	-40...+80 °C	-40...+80 °C
Maximal Altitude			5 000 m	5 000 m	5 000 m	5 000 m
Operating temperature			-40...+176 °C	-40...+176 °C	-40...+176 °C	-40...+176 °C
Degree of protection			NEMA 1	NEMA 1	NEMA 1	NEMA 1
Fire resistance according to UL 94			V0	V0	V0	V0
Dimensions	mm	h x w x d	90.5 x 53.4 x 64.8 mm	–	90.5 x 71.2 x 64.8 mm	90.5 x 71.2 x 64.8 mm
	inches	h x w x d	3.56 x 2.1 x 2.55 in	–	3.56 x 2.8 x 2.55 in	3.56 x 2.8 x 2.55 in
Dimensions with auxiliary contact (TS)	mm	h x w x d	–	98.5 x 53.4 x 64.8 mm	–	–
	inches	h x w x d	–	3.88 x 2.1 x 2.55 in	–	–
Replacement cartridges						
Phase product ID	Type		OVR T2 15-150 C U	OVR T2 40-150 C U	OVR T2 15-150 C U	OVR T2 15-320 C U
	Order code		2CTB802348R2500	2CTB802348R3500	2CTB802348R2500	2CTB802348R2700
Neutral product ID	Type		–	–	OVR T2 70 N C U	OVR T2 70 N C U
	Order code		–	–	2CTB802348R6500	2CTB802348R6500

Protection and safety

OVR Type 2 surge protective devices - Grounded Wye networks



–	–	–	–	–	–
OVR T2 3N 40-150 P TS U	**OVR T2 3N 40-320 P TS U**	**OVR T2 3N 40-320 P TS U**	**OVR T2 3N 40-440 P TS U**	**OVR T2 3N 40-550 P TS U**	**OVR T2 3N 40-660 P TS U**
UL 1449	UL 1449	UL 1449	UL 1449	UL 1449	UL 1449
4	4	4	4	4	4
4	4	4	4	4	4
AC 47-63 Hz	AC 47-63 Hz	AC 47-63 Hz	AC 47-63 Hz	AC 47-63 Hz	AC 47-63 Hz
±15%	±15%	±15%	±15%	±15%	±15%
120 V	277 V	277 V	347 V	480 V	600 V
175 V	320 V	320 V	440 V	550 V	660 V
40 kA	40 kA	40 kA	40 kA	40 kA	40 kA
20 kA	20 kA	20 kA	10 kA	10 kA	10 kA
1.2 kV	1.2 kV	1.2 kV	1.2 kV	1.2 kV	1.2 kV
< 25 ns	< 25 ns	< 25 ns	< 25 ns	< 25 ns	< 25 ns
200 kA	200 kA	200 kA	200 kA	200 kA	200 kA
≤ 100 A	≤ 100 A	≤ 100 A	≤ 100 A	≤ 100 A	≤ 100 A
≤ 125 A	≤ 125 A	≤ 125 A	≤ 125 A	≤ 125 A	≤ 125 A
Yes	Yes	Yes	Yes	Yes	Yes
Yes	Yes	Yes	Yes	Yes	Yes
Yes	Yes	Yes	Yes	Yes	Yes
–	–	–	–	–	–
Yes	Yes	Yes	Yes	Yes	Yes
2.5…25 / 4…14 mm²	2.5…25 / 4…14 mm²	2.5…25 / 4…14 mm²	2.5…25 / 4…14 mm²	2.5…25 / 4…14 mm²	2.5…25 / 4…14 mm²
2.5…16 / 6…14 mm²	2.5…16 / 6…14 mm²	2.5…16 / 6…14 mm²	2.5…16 / 6…14 mm²	2.5…16 / 6…14 mm²	2.5…16 / 6…14 mm²
12.5 / 0.5 mm	12.5 / 0.5 mm	12.5 / 0.5 mm	12.5 / 0.5 mm	12.5 / 0.5 mm	12.5 / 0.5 mm
2.8 / 24.5 Nm	2.8 / 24.5 Nm	2.8 / 24.5 Nm	2.8 / 24.5 Nm	2.8 / 24.5 Nm	2.8 / 24.5 Nm
4 NO – 4 NC	4 NO – 4 NC	4 NO – 4 NC	4 NO – 4 NC	4 NO – 4 NC	4 NO – 4 NC
12 V DC – 10 mA	12 V DC – 10 mA	12 V DC – 10 mA	12 V DC – 10 mA	12 V DC – 10 mA	12 V DC – 10 mA
250 V AC – 1 A	250 V AC – 1 A	250 V AC – 1 A	250 V AC – 1 A	250 V AC – 1 A	250 V AC – 1 A
1.5 / 16 mm²	1.5 / 16 mm²	1.5 / 16 mm²	1.5 / 16 mm²	1.5 / 16 mm²	1.5 / 16 mm²
-40...+80 °C	-40...+80 °C	-40...+80 °C	-40...+80 °C	-40...+80 °C	-40...+80 °C
5 000 m	5 000 m	5 000 m	5 000 m	5 000 m	5 000 m
-40...+176 °C	-40...+176 °C	-40...+176 °C	-40...+176 °C	-40...+176 °C	-40...+176 °C
NEMA 1	NEMA 1	NEMA 1	NEMA 1	NEMA 1	NEMA 1
V0	V0	V0	V0	V0	V0
–	–	–	–	–	–
–	–	–	–	–	–
98.5 x 71.2 x 64.8 mm	98.5 x 71.2 x 64.8 mm	98.5 x 71.2 x 64.8 mm	98.5 x 71.2 x 64.8 mm	98.5 x 71.2 x 64.8 mm	98.5 x 71.2 x 64.8 mm
3.88 x 2.8 x 2.55 in	3.88 x 2.8 x 2.55 in	3.88 x 2.8 x 2.55 in	3.88 x 2.8 x 2.55 in	3.88 x 2.8 x 2.55 in	3.88 x 2.8 x 2.55 in
OVR T2 40-150 C U	OVR T2 40-320 C U	OVR T2 40-320 C U	OVR T2 40-440 C U	OVR T2 40-550 C U	OVR T2 40-660 C U
2CTB802348R3500	2CTB802348R3700	2CTB802348R3700	2CTB802348R3900	2CTB802348R4100	2CTB802348R4300
OVR T2 70 N C U	OVR T2 70 N C U	OVR T2 70 N C U	OVR T2 70 N C U	OVR T2 70 N C U	OVR T2 70 N C U
2CTB802348R6500	2CTB802348R6500	2CTB802348R6500	2CTB802348R6500	2CTB802348R6500	2CTB802348R6500

OVRH UL version
Product range overview





Name	OVRHTP	OVRHT3B
SPD type	Type 1	Type 1
Certifications	UL 1449	UL 1449
Surge ratings	60, 80, 100, 120, 160, 200, 240, 300, 400 kA per phase	50 kA per phase
LEDs	Yes	Yes
Dry relay contacts	Optional	Not available
EMI filter	Optional	Not available
Surge counter	Optional	Not available
Warranty	10 years	3 years





	OVRHT3C	OVRHS3U
	Type 1	Type 1 and Type 2
	UL 1449	UL 1449
	50 kA per phase	40 kA per phase
	Yes	Yes
	Not available	Optional
	Not available	Not available
	Not available	Not available
	3 years	3 year

OVRHTP series
OVRHTP (60 to 200 kA)



Product features

- UL Listed 1449 4th edition for Type 1 and Type 2
- SPD applications
- Thermally protected MOVs provide superior protection and continuous operation
- 200 kAIC short circuit current rating allows direct bus connection without the need for an upstream over-current protection device
- UL 1283 EMI/RF filter available as an option
- Compact and lightweight design
- 10-year standard warranty

c UL US LISTED RoHS Compliant

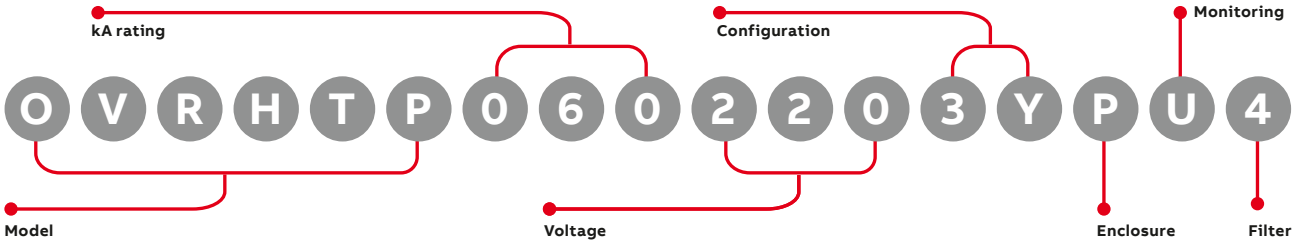

kA rating	Suffix
60 kA per phase, 30 kA per mode	060
80 kA per phase, 40 kA per mode	080
100 kA per phase, 50 kA per mode	100
120 kA per phase, 60 kA per mode	120
160 kA per phase, 80 kA per mode	160
200 kA per phase, 100 kA per mode	200

Voltage and configuration (must choose one)	Suffix
120 V, 1-phase, 2-wire + ground	1201P
127 V, 1-phase, 2-wire + ground	1271P
220 V, 1-phase, 2-wire + ground	2201P
230 V, 1-phase, 2-wire + ground	2301P
240 V, 1-phase, 2-wire + ground	2401P
277 V, 1-phase, 2-wire + ground	2771P
240/120 V, 2-phase, 3-wire + ground	1202S
480/240 V, 2-phase, 3-wire + ground	2402S
240Δ /120 V, 3-phase high-leg , 4-wire + ground	1203H
208Y/120 V, 3-phase Wye, 4-wire + ground	1203Y
380Y/220 V, 3-phase Wye, 4-wire + ground	2203Y
400Y/230 V, 3-phase Wye, 4-wire + ground	2303Y
415Y/240 V, 3-phase Wye, 4-wire + ground	2403Y
480Y/277 V, 3-phase Wye, 4-wire + ground	2773Y
600Y/347 V, 3-phase Wye, 4-wire + ground	3473Y
208 V, 3-phase Delta, 3-wire + ground	2083D
240 V, 3-phase Delta, 3-wire + ground	2403D
415 V, 3-phase Delta, 3-wire + ground	4153D
480 V, 3-phase Delta, 3-wire + ground	4803D
600 V, 3-phase Delta, 3-wire + ground	6003D
1-phase, 2-wire + ground (for TNC grounding systems)	2301PI
1-phase, 2-wire + ground (for TNS grounding systems)	2301PJ
1-phase, 2-wire + ground (for IT grounding systems)	2301PK
1-phase, 2-wire + ground (for TT grounding systems)	2301P

Enclosure option	Suffix
Fiberglass-reinforced polyester, NEMA 4X	P
Powder-coated metal NEMA 4	4
Stainless steel NEMA 4X	S

Monitoring option (must choose one)	Suffix
Status indicator LED lights (one per phase)	B
Status indicator LED lights (one per phase), dry relay contacts, audible alarm with silence button, fault light	U
Status indicator LED lights (one per phase), surge counter, dry relay contacts, audible alarm with silence button, fault light	UE

(only available in 120, 160, 200 kA per phase)

Filter option	Suffix
4 UF filter	4
No filter	0

For UL 1283 approved filter - T2 must be at the end of the part number.
For example OVRHTP0602203YPU4T2

Product specifications

Electrical	
60 kA per phase, 30 kA per mode	
80 kA per phase, 40 kA per mode	
100 kA per phase, 50 kA per mode	
120 kA per phase, 60 kA per mode	
160 kA per phase, 80 kA per mode	
200 kA per phase, 100 kA per mode	
Maximum surge current rating	XX kA per phase, XX kA per mode
Nominal discharge current rating (L-N)	20 kA Earthing and Delta systems 10 kA
Operating frequency	47–63 Hz
Connection method	Pre-wired with 36 inches of #10 AWG conductor
Modes of protection	All modes (L-N, L-G, N-G, L-L)
Fault rating (SCCR)	200 kAIC — no upstream over-current protection device (breaker or fuse) required
Application	ANSI/IEEE C62.41.1 locations A, B and C ideal for distribution panels, branch panels and critical loads

Mechanical		
Installation location		Indoor or outdoor
Mounting method		Dual mounting flanges
Operating environment	-40 °F to 149 °F (-40 °C to +65 °C)	5%–95% non-condensing humidity
Altitude		0–12,000 ft (3.66 km)
Product design		Individual thermally fused MOV technology

EMI/RFI filter attenuation	
Mil Standard 220B	Up to 40 dB from 10 kHz to 100 MHz

Regulatory	
cULus 1449 4th Edition	VZCA: E316636 Type 1
UL 1283 with filter option	Yes
UL96A compliant	Yes
IEEE C62.41.2, C62.45	Yes
NFPA 70 (NEC), Article 285	Yes
RoHs compliant	Yes
Listed by	UL

Warranty	10 years

OVRHTP series
OVRHTP (240 to 400 kA)



Product features

- UL Listed 1449 4th edition for Type 1 and Type 2
- SPD applications
- Thermally protected MOVs provide superior protection and continuous operation
- 200 kAIC short circuit current rating allows direct bus connection without the need for an upstream over-current protection device
- UL 1283 EMI/RF filter available as an option
- Compact and lightweight design
- 10-year standard warranty

c UL US LISTED

RoHS Compliant

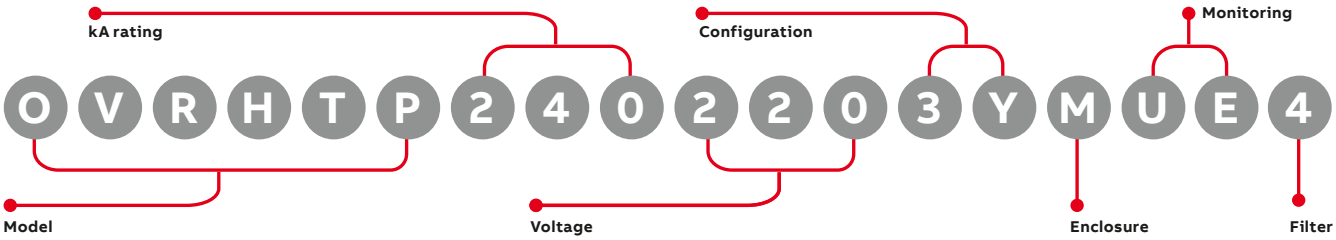

kA rating	Suffix
240 kA per phase, 120 kA per mode	240
300 kA per phase, 150 kA per mode	300
400 kA per phase, 200 kA per mode	400

Enclosure option	Suffix
Fiberglass-reinforced polyester with termination lugs	PL
Powder-coated metal NEMA 4 with termination lugs	4L
Stainless steel NEMA 4X with termination lug	SL

Voltage and configuration (must choose one)	Suffix
120 V, 1-phase, 2-wire + ground	1201P
127 V, 1-phase, 2-wire + ground	1271P
220 V, 1-phase, 2-wire + ground	2201P
230 V, 1-phase, 2-wire + ground	2301P
240 V, 1-phase, 2-wire + ground	2401P
277 V, 1-phase, 2-wire + ground	2771P
240/120 V, 2-phase, 3-wire + ground	1202S
480/240 V, 2-phase, 3-wire + ground	2402S
240Δ /120 V, 3-phase high-leg , 4-wire + ground	1203H
208Y/120 V, 3-phase Wye, 4-wire + ground	1203Y
380Y/220 V, 3-phase Wye, 4-wire + ground	2203Y
400Y/230 V, 3-phase Wye, 4-wire + ground	2303Y
415Y/240 V, 3-phase Wye, 4-wire + ground	2403Y
480Y/277 V, 3-phase Wye, 4-wire + ground	2773Y
600Y/347 V, 3-phase Wye, 4-wire + ground	3473Y
208 V, 3-phase Delta, 3-wire + ground	2083D
240 V, 3-phase Delta, 3-wire + ground	2403D
415 V, 3-phase Delta, 3-wire + ground	4153D
480 V, 3-phase Delta, 3-wire + ground	4803D
600 V, 3-phase Delta, 3-wire + ground	6003D

Monitoring option (must choose one)	Suffix
Status indicator LED lights (one per phase)	B
Status indicator LED lights (one per phase), dry relay contacts, audible alarm with silence button, fault light	U
Status indicator LED lights (one per phase), surge counter, dry relay contacts, audible alarm with silence button, fault light	UE

Filter option	Suffix
4 UF filter	4
No filter	0

For UL 1283 approved filter - T2 must be at the end of the part number.
For example OVRHTP0602203YPU4T2

Product specifications

Electrical		
240 kA per phase, 120 kA per mode		
300 kA per phase, 150 kA per mode		
400 kA per phase, 200 kA per mode		
Maximum surge current rating		XX kA per phase, XX kA per mode
Nominal discharge current rating (L-N)		20 kA Earthing and Delta systems 10 kA
Operating frequency		47–63 Hz
Connection method		Termination lugs for #10–#4 AWG conductor (PL, ML or SL enclosure suffix)
Modes of protection		All modes (L-N, L-G, N-G, L-L)
Fault rating (SCCR)		200 kAIC — no upstream over-current protection device (breaker or fuse) required
Application		ANSI/IEEE C62.41.1 locations A, B and C ideal for distribution panels, branch panels and critical loads

Mechanical		
Installation location		Indoor or outdoor
Mounting method		Dual mounting flanges
Operating environment	-40 °F to 149 °F (-40 °C to +65 °C)	5%–95% non-condensing humidity
Altitude		0–12,000 ft (3.66 km)
Product design		Individual thermally fused MOV technology

EMI/RFI filter attenuation	
Mil Standard 220B	Up to 40 dB from 10 kHz to 100 MHz

Regulatory	
cULus 1449 4th Edition	VZCA: E316636 Type 1
UL 1283 with filter option	Yes
UL96A compliant	Yes
IEEE C62.41.2, C62.45	Yes
NFPA 70 (NEC), Article 285	Yes
RoHs compliant	Yes
Listed by	UL

Warranty	**10 years**

Protection and safety

OVRHT3B



- Listed to UL 1449 4th Edition for Type 1 SPD applications.
- 50kA per phase protection.
- Individual thermally fused and protected MOVs.
- Includes pre-wired pigtail conductors.
- Multiple MOVs per phase eliminates single point failure.

Technical features

Electrical	
Nominal discharge current rating (I-n)	20 kA (Earthling systems 10 kA)
Operating frequency	47–63 Hz
Connection methods	Parallel to load (shunt) 914.4 mm (36") of 3.31 mm² (#12 AWG) wires
Modes of protection	Model dependent
Fault rating (SCCR)	100 kA IC
Standard monitoring	LED status indicator lights
Mechanical	
Weight	23 kg (5 lbs)
Enclosure type	NEMA 4X, non metallic
Installation location	Indoor/Outdoor
Mounting method	12.7 mm (1/2")–14 NPT thread
Operating environment	-35 to +80 °C (-31 to +176 °F)
Altitude	Up to 5000 m (16,400 ft.)
Product design	Individual thermally fused and protected MOVs
Regulatory	
UL 1449 4th edition type	Type 1
UL 96A	Yes
IEEE C62.41.1, .2, C62.45	Yes
Listed by	UL

Protection and safety

OVRHT3B



Configuration	kA per phase	Voltage	Order details		Weight 1 piece	Pack unit
			Type code	Order code	kg	pc.
1-phase, 2-wire + ground	50kA	120 V	OVRHT3B501201P	2CJC405120P0000	0.23	1
1-phase, 2-wire + ground	50kA	240 V	OVRHT3B502401P	2CJC405240P0000	0.23	1
1-phase, 2-wire + ground	50kA	277 V	OVRHT3B502771P	2CJC405277P0000	0.23	1
1-phase, 2-wire + ground	50kA	480 V	OVRHT3B504801P	2CJC405480P0000	0.23	1
2-phase, 3-wire + ground	50kA	240/120 V	OVRHT3B501202S	2CJC405120S0000	0.23	1
2-phase, 3-wire + ground	50kA	480/240 V	OVRHT3B502402S	2CJC405240S0000	0.23	1
3-phase High-Leg, 4-wire + ground	50kA	240Δ/120 V	OVRHT3B502403H	2CJC405240H0000	0.23	1
3-phase Wye, 4-wire + ground	50kA	208Y/120 V	OVRHT3B501203Y	2CJC405120Y0000	0.23	1
3-phase Wye, 4-wire + ground	50kA	380Y/220 V	OVRHT3B502203Y	2CJC405220Y0000	0.23	1
3-phase Wye, 4-wire + ground	50kA	400Y/230 V	OVRHT3B502303Y	2CJC405230Y0000	0.23	1
3-phase Wye, 4-wire + ground	50kA	415Y/240 V	OVRHT3B502403Y	2CJC405240Y0000	0.23	1
3-phase Wye, 4-wire + ground	50kA	480Y/277 V	OVRHT3B502773Y	2CJC405277Y0000	0.23	1
3-phase Wye, 4-wire + ground	50kA	600Y/347 V	OVRHT3B503473Y	2CJC405347Y0000	0.23	1
3-phase Delta, 3-wire + ground	50kA	240 V	OVRHT3B502403D	2CJC405240D0000	0.23	1
3-phase Delta, 3-wire + ground	50kA	380 V	OVRHT3B503803D	2CJC405380D0000	0.23	1
3-phase Delta, 3-wire + ground	50kA	400 V	OVRHT3B504003D	2CJC405400D0000	0.23	1
3-phase Delta, 3-wire + ground	50kA	480 V	OVRHT3B504803D	2CJC405480D0000	0.23	1
3-phase Delta, 3-wire + ground	50kA	600 V	OVRHT3B506003D	2CJC405600D0000	0.23	1
Earthing Systems						
1-phase, 2-wire + ground (for TNC earthing systems)	50kA	230V	OVRHT3B502301PI	2CJC405230I0000	0.23	1
1-phase, 2-wire + ground (for TNS earthing systems)	50kA	230V	OVRHT3B502301PJ	2CJC405230J0000	0.23	1
1-phase, 2-wire + ground (for IT earthing systems)	50kA	230V	OVRHT3B502301PK	2CJC405230K0000	0.23	1
1-phase, 2-wire + ground (for TT earthing systems)	50kA	230V	OVRHT3B502301PL	2CJC405230L0000	0.23	1
Warranty						
3-year						

Protection and safety

OVRHT3C



- Listed to UL 1449 4th Edition for Type 1 SPD applications.
- 50kA per phase protection.
- Individual thermally fused and protected MOVs.
- Includes pre-wired pigtail conductors.
- Multiple MOVs per phase eliminates single point failure.

Technical features

Electrical	
Nominal discharge current rating (I-n)	20kA (Earthling systems 10kA)
Operating Frequency	47–63Hz
Connection Methods	Parallel to load 914.4mm (36“) of 3.31mm2 (#12 AWG) wires
Modes of protection	Model dependent
Fault rating (SCCR)	100kAIC
Standard monitoring	LED status indicator lights
Mechanical	
Weight	.23 kg (.5 lbs)
Enclosure type	NEMA 4X, non metallic
Installation location	Indoor/Outdoor
Mounting method	12.7mm (1/2”)–14 NPT thread
Operating environment	-35° to +80°C (-31° to +176°F)
Altitude	Up to 5000 m (16,400 ft.)
Product design	Individual thermally fused and protected MOVs
Regulatory	
UL 1449 4th edition type	Type 1
UL 96A	Yes
IEEE C62.41.1, .2, C62.45	Yes
Listed by	UL

Protection and safety

OVRHT3C

Configuration	kA per phase	Voltage	Order details		Weight 1 piece	Pack unit
			Type code	Order code	kg	pc.
1-phase, 2-wire + ground	50kA	120V	OVRHT3C501201P	2CJC605120P0000	0.23	1
1-phase, 2-wire + ground	50kA	240V	OVRHT3C502401P	2CJC605240P0000	0.23	1
1-phase, 2-wire + ground	50kA	277V	OVRHT3C502771P	2CJC605277P0000	0.23	1
1-phase, 2-wire + ground	50kA	480V	OVRHT3C504801P	2CJC605480P0000	0.23	1
2-phase, 3-wire + ground	50kA	240 V/120 V	OVRHT3C501202S	2CJC605120S0000	0.23	1
2-phase, 3-wire + ground	50kA	480 V/240 V	OVRHT3C502402S	2CJC605240S0000	0.23	1
3-phase High-Leg, 4-wire + ground	50kA	240Δ/120 V	OVRHT3C502403H	2CJC605240H0000	0.23	1
3-phase Wye, 4-wire + ground	50kA	208Y/120 V	OVRHT3C501203Y	2CJC605120Y0000	0.23	1
3-phase Wye, 4-wire + ground	50kA	380Y/220 V	OVRHT3C502203Y	2CJC605220Y0000	0.23	1
3-phase Wye, 4-wire + ground	50kA	400Y/230 V	OVRHT3C502303Y	2CJC605230Y0000	0.23	1
3-phase Wye, 4-wire + ground	50kA	415Y/240 V	OVRHT3C502403Y	2CJC605240Y0000	0.23	1
3-phase Wye, 4-wire + ground	50kA	480Y/277 V	OVRHT3C502773Y	2CJC605277Y0000	0.23	1
3-phase Wye, 4-wire + ground	50kA	600Y/347 V	OVRHT3C503473Y	2CJC605347Y0000	0.23	1
3-phase Delta, 3-wire + ground	50kA	240 V	OVRHT3C502403D	2CJC605240D0000	0.23	1
3-phase Delta, 3-wire + ground	50kA	380 V	OVRHT3C503803D	2CJC605380D0000	0.23	1
3-phase Delta, 3-wire + ground	50kA	400 V	OVRHT3C504003D	2CJC605400D0000	0.23	1
3-phase Delta, 3-wire + ground	50kA	480 V	OVRHT3C504803D	2CJC605480D0000	0.23	1
3-phase Delta, 3-wire + ground	50kA	600 V	OVRHT3C506003D	2CJC605600D0000	0.23	1
Earthing Systems						
1-phase, 2-wire + ground (for TNC earthing systems)	50kA	230 V	OVRHT3C502301PI	2CJC605230I0000	0.23	1
1-phase, 2-wire + ground (for TNS earthing systems)	50kA	230 V	OVRHT3C502301PJ	2CJC605230J0000	0.23	1
1-phase, 2-wire + ground (for IT earthing systems)	50kA	230 V	OVRHT3C502301PK	2CJC605230K0000	0.23	1
1-phase, 2-wire + ground (for TT earthing systems)	50kA	230 V	OVRHT3C502301PL	2CJC605230L0000	0.23	1
Warranty						
3-year						

Protection and safety

OVRHS3U



- Listed to UL 1449 4th Edition for Type 1 and Type 2 SPD applications.
- Individual fusing for each Metal Oxide Varistors (MOVs).
- LED indicates proper functioning of L-N and N-G MOVs.

Technical features

Electrical	
Nominal discharge current rating (I-n)	20kA
Operating frequency	47–63Hz
Connection methods	Parallel to load (shunt) 2 mm² (#14 AWG) wires
Modes of protection	Model dependent
Fault rating (SCCR)	100kAIC
Standard monitoring	LED status indicator lights
Mechanical	
Weight	0.9kg (2 lbs.)
Enclosure type	NEMA 1, non-metallic
Installation location	Indoor
Mounting method	12.7 mm (1/2")–14 NPT thread (Aluminum bracket optional)
Operating environment	-40 to +80 °C (-40 to +176 °F)
Altitude	Up to 5000m (16,400 ft.)
Product design	Individually fused MOVs
Regulatory	
UL 1449 4th edition type	Type 1 and Type 2
UL 1283	Only for model number OVRHS3U802402SR
IEEE C62.41.1, .2, C62.45	Yes
Listed by	UL

Protection and safety

OVRHS3U



Type 1

Configuration	kA per phase	Voltage	Order details		Weight 1 piece	Pack unit
			Type code	Order code	kg	pc.
1-phase, 2-wire + ground	40kA	120 V	OVRHS3U401201P	2CJB504120P0000	9	1
2-phase, 3-wire + ground	40kA	120/240 V	OVRHS3U401202S	2CJB504120S0000	9	1
3-phase Delta, 4-wire + ground	40kA	240 V	OVRHS3U402403D	2CJB504240D0000	9	1
3-phase Wye, 4-wire + ground	40kA	120/208 V	OVRHS3U401203Y	2CJB504120Y0000	9	1
		240 V	OVRHS3U402401P	2CJB504240P0000	9	1
		480 V	OVRHS3U404803D	2CJB504480D0000	9	1
		240Δ/120 V	OVRHS3U401203H	2CJB504120H0000	9	1
		480Y/277 V	OVRHS3U402773Y	2CJB504277Y0000	9	1
		400Y/230 V	OVRHS3U402303Y	2CJB504230Y0000	9	1

Type 2

Configuration	kA per phase	Voltage	Order details		Weight 1 piece	Pack unit
			Type code	Order code	kg	pc.
1-phase, 2-wire + ground	40kA	240V	OVRHS3U402401P	2CJB504240P0000	9	1
2-phase, 3-wire + ground	80kA	120/240V	OVRHS3U801202SR	2CJB508120S0500	9	1
3-phase Delta, 3-wire + ground	40kA	480V	OVRHS3U404803D	2CJB504480D0000	9	1
3-phase High-Leg, 4-wire + ground	40kA	120/240V	OVRHS3U401203H	2CJB504120H0000	9	1
3-phase Wye, 4-wire + ground	40kA	277/480V	OVRHS3U402773Y	2CJB504277Y0000	9	1
3-phase Wye, 4-wire + ground	40kA	230/400V	OVRHS3U402303Y	2CJB504230Y0000	1	1

Available options (Not available on OVRHS3U802402SR unit)	Model number*
1 set of dry relay contacts (all models)	5
1 set of dry relay contacts + mounting bracket (only on OVRHS3U402401P and OVRHS3U402303Y models)	P

OVRHTP series

Dimensions

Dimensions OVRHTP (60 to 100 kA)

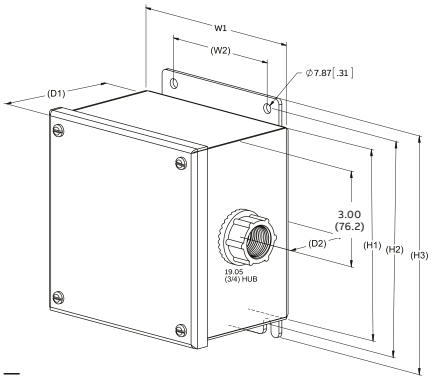

Metal and Stainless Steel Enclosure

Value	Inches / millimeters
H1	6.00 / 152.4
H2	6.75 / 171.5
H3	7.5 /190.5
W1	6.00 / 152.4
W2	4.00 / 101.6
D1	4.26 / 108.3
D2	2.25 / 57.2

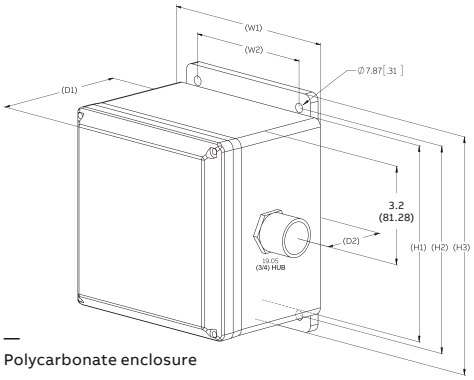

Polycarbonate enclosure

Value	Inches / millimeters
H1	6.42 / 163
H2	6.75 / 171.5
H3	7.75 / 196.9
W1	6.42 / 163
W2	4.50 / 114.3
D1	4.79 / 121.7
D2	2.25 / 57.15

Dimensions OVRHTP (120 to 200 kA)

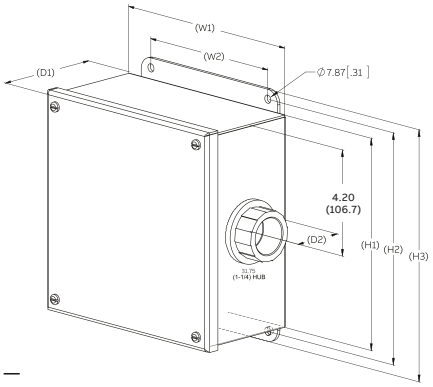

Metal and Stainless Steel Enclosure

Value	Inches / millimeters
H1	8.00 / 203.2
H2	8.75 / 222.3
H3	9.5 / 241.3
W1	8.00 / 203.2
W2	6.00 / 152.4
D1	4.26 / 108.3
D2	2.00 / 50.8

OVRHTP series

Dimensions

Dimensions OVRHTP (120 to 200 kA)

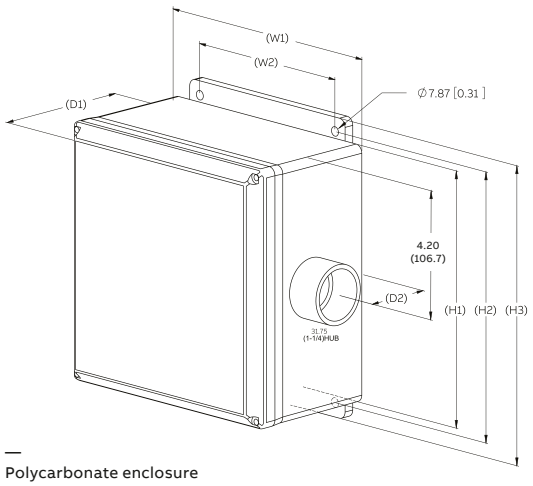

Polycarbonate enclosure

Value	Inches / millimeters
H1	8.42 / 213.9
H2	8.84 / 224.4
H3	9.78 / 248.3
W1	8.42 / 213.9
W2	6.00 / 152.4
D1	4.79 / 121.7
D2	2.25 / 57.2

OVRHTP series

Dimensions

Dimensions OVRHTP (240 to 400 kA)

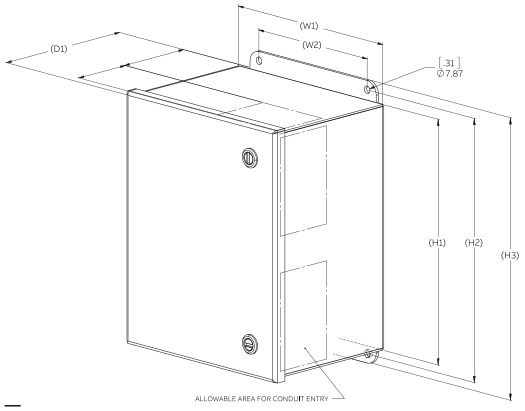

Metal and Stainless Steel Enclosure

H1	10.00 / 254
H2	10.75 / 273.1
H3	11.5 / 292.1
W1	8.00 / 203.2
W2	6.00 / 152.4
D	6.26 / 159.1

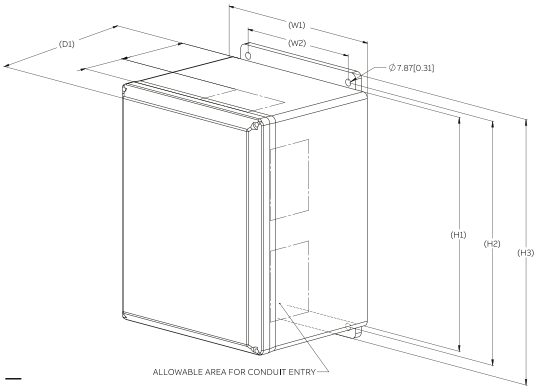

Polycarbonate enclosure

H1	10.35 / 291.9
H2	10.75 / 273.1
H3	11.69 / 296.9
W1	8.35 /212.1
W2	6.00 / 152.4
D	6.79 / 172.5

OVRHT3B and OVRHT3C Series

Dimensions

Dimensions OVRHT3B

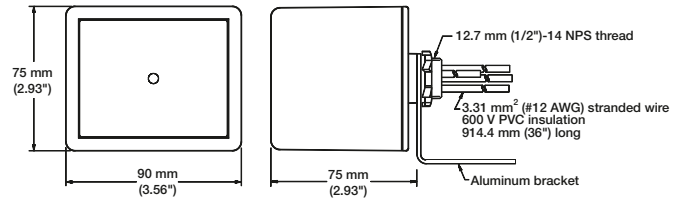

Value	Inches / millimeters
W	3.36 / 90.0
D	2.93 / 75.0
H	2.93 / 75.0

Dimensions OVRHT3C

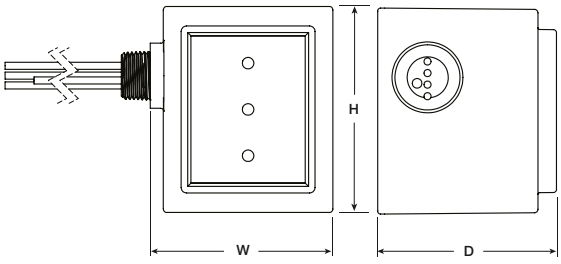

Value	Inches / millimeters
W	3.18 / 80.8
D	3.10 / 78.7
H	3.56 / 90.4

OVRHS3U Series

Dimensions

Dimensions OVRHS3U (with and without dry contacts option)

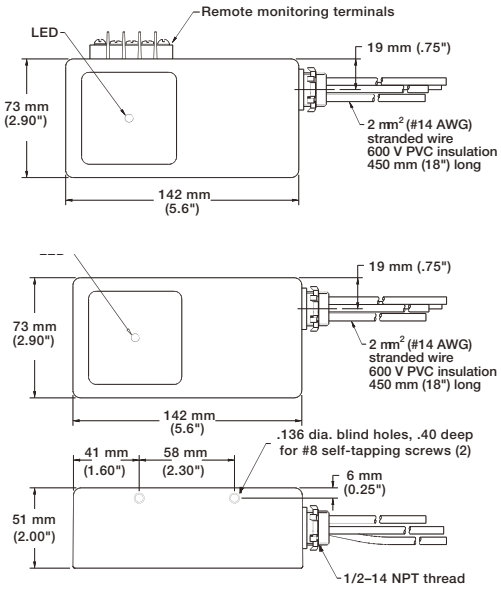

Value	Inches / millimeters
W	2.90 / 73.0
D	2.00 / 51.0
H	5.60 / 142.0

Dimensions mounting bracket OVRHS3U

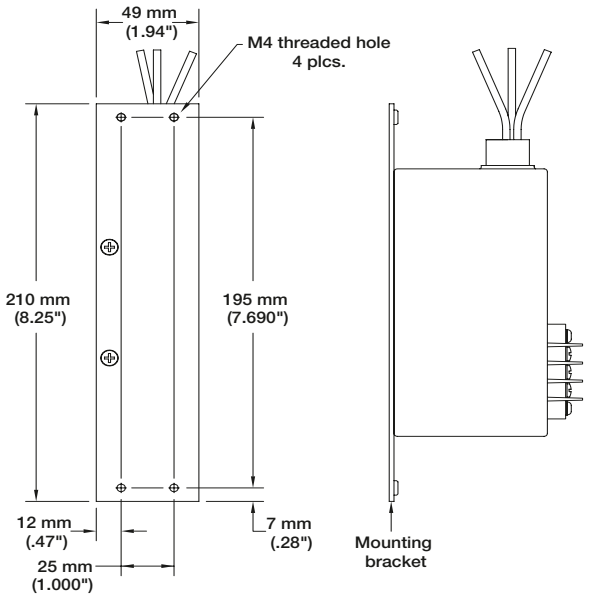

Value	Inches / millimeters
W	1.94 / 49.0
H	8.25 / 210.0

Notes

Legacy GE

TPME series SPD



Wall-mount SPD with enhanced thermal protection

- UL Listed 1449 4th Edition, Type 1, Type 2
- cUL Listed, CSA C22.2
- UL 96A, for use in lightning protection systems
- Patented thermal fuse technology
- Standard features include a surge counter, audible alarm, indicating lights, dry contacts and NEMA 4 painted steel enclosure
- 10-year limited warranty
- xxx per phase/ xxx per mode

Voltage	Configuration	Part number
240/120	1-phase, 3-wire + ground	TPME120Sxxx WMN
208Y/120	3-phase, 4-wire + ground	TPME120Yxxx WMN
380Y/220	3-phase, 4-wire + ground	TPME220Yxxx WMN
240 Delta	3-phase, 3-wire + ground	TPME240Dxxx WMN
240/120 Hi-Leg Delta	3-phase, 4-wire + ground	TPME240Hxxx WMN
415Y/240	3-phase, 4-wire + ground	TPME240Yxxx WMN
480Y/277	3-phase, 4-wire + ground	TPME277Yxxx WMN
600Y/347	3-phase, 4-wire + ground	TPME347Yxxx WMN
480 Delta	3-phase, 3-wire + ground	TPME480Dxxx WMN
Desired kA		**xxx Code**
65 per mode		06
80 per mode		08
100 per mode		10
Options	**Weight**	**Suffix**
Painted steel, NEMA 4 without disconnect*	44 lbs. (20.0 kg)	WMN4S / WMN4ST1**
Stainless steel, NEMA 4X without disconnect	50 lbs. (22.7 kg)	WMN4X / WMN4XT1**
Painted steel, NEMA 1 with disconnect	63 lbs. (28.5 kg)	WMN1 / WMN1T1**
Fiberglass, NEMA 4X with disconnect	56 lbs. (25.4 kg)	WMN4 / WMN4**

* Standard enclosure

Electrical characteristics	
Maximum surge current rating	xxx per phase/ xxx per mode 130 kA per phase/ 65 kA per mode 160 kA per phase/ 80 kA per mode 200 kA per phase/ 100 kA per mode
Nominal discharge current rating (L-N)	20 kA
Operating frequency	50–60 Hz
Surge life (IEEE C62.41 - C3 10 kA)	≥5,000 impulses
Connection method	#6 to 2/0 AWG conductors, parallel connected
Modes of protection	All modes (L-N, L-G, N-G, L-L)
Fault rating (SCCR)	200 kAIC
Standard monitoring	Status indicator lights (one per phase) and red service light Audible alarm with silencer and test switch Contacts for remote monitoring (2 amp, 125 V AC)–(1 amp, 30 V DC) 6-digit LCD re-settable surge event counter
EMI / RFI filter attenuation	
Maximum attenuation frequency	-50 dB at 100 kHz
Mechanical characteristics	
Weight	Varies and depends on enclosure type
Enclosure type	Varies on option chosen
Installation location	Service entrance equipment, primary distribution equipment
Mounting method	Surface mount, 4-point mounting brackets
Operating temperature	-40 °F to 149 °F (-40 °C to 65 °C)
Altitude	0–12,000 ft. (3.66 km)
Product design	Individually fused thermally protected MOV technology
Regulations and certifications	
UL 1449 4th edition	VZCA: E320456 Type 1 / Type 2
cUL, CSA C22.2	VZCA7: E320456 Type 2 / Type 2
UL 1283	FOKY: E320456 Type 2
UL 96A	Yes
IEEE C62.62, C62.72, C62.41	Yes
Listed by	UL

Legacy GE

TPHE series SPD



Wall-mount SPD with enhanced thermal protection

- UL Listed 1449 4th Edition, Type 1, Type 2
- cUL Listed, CSA C22.2
- UL 96A, for use in lightning protection systems
- Thermally protected MOV design eliminates the need for additional upstream over-current protection
- Standard features include a surge counter, audible alarm, indicating lights, dry contacts and NEMA 4 painted steel enclosure
- 10-year limited warranty
- xxx per phase/ xxx per mode

Voltage	Configuration	Part number
240/120	1-phase, 3-wire + ground	TPHE120Sxxx WMN
208Y/120	3-phase, 4-wire + ground	TPHE120Yxxx WMN
380Y/220	3-phase, 4-wire + ground	TPHE220Yxxx WMN
240 Delta	3-phase, 3-wire + ground	TPHE240Dxxx WMN
240/120 Hi-Leg Delta	3-phase, 4-wire + ground	TPHE240Hxxx WMN
415Y/240	3-phase, 4-wire + ground	TPHE240Yxxx WMN
480Y/277	3-phase, 4-wire + ground	TPHE277Yxxx WMN
600Y/347	3-phase, 4-wire + ground	TPHE347Yxxx WMN
480 Delta	3-phase, 3-wire + ground	TPHE480Dxxx WMN
Desired kA		**xxx Code**
125 per mode		12
150 per mode		15
200 per mode		20
250 per mode		25
300 per mode		30
Options	**Weight**	**Suffix**
Painted steel, NEMA 4 without disconnect*	44 lbs. (20.0 kg)	WMN4S / WMN4ST1**
Stainless steel, NEMA 4X without disconnect	50 lbs. (22.7 kg)	WMN4X / WMN4XT1**
Painted steel, NEMA 1 with disconnect	63 lbs. (28.5 kg)	WMN1 / WMN1T1**
Fiberglass, NEMA 4X with disconnect	56 lbs. (25.4 kg)	WMN4 / WMN4**

* Standard enclosure

Electrical characteristics	
Maximum surge current rating	250 kA per phase/ 125 kA per mode 300 kA per phase/ 150 kA per mode 400 kA per phase/ 200 kA per mode 500 kA per phase/ 250 kA per mode 600 kA per phase/ 300 kA per mode
Nominal discharge current rating (L-N)	20 kA
Operating frequency	50–60 Hz
Surge life (IEEE C62.41 - C3 10 kA)	≥20,000 impulses
Connection method	#6 to 2/0 AWG conductors, parallel connected
Modes of protection	All modes (L-N, L-G, N-G, L-L)
Fault rating (SCCR)	200 kAIC
Standard monitoring	Status indicator lights (one per phase) and red service light Audible alarm with silencer and test switch Contacts for remote monitoring (2 amp, 125 V AC)–(1 amp, 30 V DC) 6-digit LCD re-settable surge event counter
EMI / RFI filter attenuation	
Maximum attenuation frequency	-50 dB at 100 kHz
Mechanical characteristics	
Weight	Varies and depends on enclosure type
Enclosure type	Varies on option chosen
Installation location	Service entrance equipment, primary distribution equipment
Mounting method	Surface mount, 4-point mounting brackets
Operating temperature	-40 °F to 149 F (-40 °C to 65 °C)
Altitude	0–12,000 ft. (3.66 km)
Product design	Individually fused thermally protected MOV technology
Regulations and certifications	
UL 1449 4th edition	VZCA: E320456 Type 1 / Type 2
cUL, CSA C22.2	VZCA7: E320456 Type 2 / Type 2
UL 1283	FOKY: E320456 Type 2
UL 96A	Yes
IEEE C62.62, C62.72, C62.41	Yes
Listed by	UL

Legacy GE

TME series SPD



Wall-mount SPD

- UL Listed 1449 4th Edition, Type 2
- cUL Listed, CSA C22.2
- UL 96A, for use in lightning protection systems
- UL Recognized 200 kAIC surge-rated fuses in combination with patented thermal fuse technology
- Standard features include a surge counter, audible alarm, indicating lights, dry contacts and NEMA 4 painted steel enclosure
- 10-year limited warranty
- xxx per phase/ xxx per mode

Voltage	Configuration	Part number
240/120	1-phase, 3-wire + ground	TME120SxxxWMN
208Y/120	3-phase, 4-wire + ground	TME120YxxxWMN
380Y/220	3-phase, 4-wire + ground	TME220YxxxWMN
240 Delta	3-phase, 3-wire + ground	TME240DxxxWMN
240/120 Hi-Leg Delta	3-phase, 4-wire + ground	TME240HxxxWMN
415Y/240	3-phase, 4-wire + ground	TME240YxxxWMN
480Y/277	3-phase, 4-wire + ground	TME277YxxxWMN
600Y/347	3-phase, 4-wire + ground	TME347YxxxWMN
480 Delta	3-phase, 3-wire + ground	TME480DxxxWMN
Desired kA		**xxx Code**
65 per mode		065
80 per mode		080
100 per mode		100
Option		**Suffix**
Painted steel, NEMA 4*		4S
Stainless steel, NEMA 4X		4X

* Standard enclosure

Electrical characteristics	
Maximum surge current rating	xxx per phase/ xxx per mode 130 kA per phase/ 65 kA per mode 160 kA per phase/ 80 kA per mode 200 kA per phase/ 100 kA per mode
Nominal discharge current rating (L-N)	20 kA
Operating frequency	50–60 Hz
Surge life (IEEE C62.41 - C3 10 kA)	≥5,000 impulses
Connection method	#6 to 2/0 AWG conductors, parallel connected
Modes of protection	All modes (L-N, L-G, N-G, L-L)
Fault rating (SCCR)	65 kA (30 A breaker required)
Standard monitoring	Status indicator lights (one per phase) and red service light Audible alarm with silencer and test switch Contacts for remote monitoring (2 amp, 125 V AC)–(1 amp, 30 V DC) 6-digit LCD re-settable surge event counter
EMI / RFI filter attenuation	
Maximum attenuation frequency	-44 dB at 50–100 kHz
Mechanical characteristics	
Weight	32 lbs. (14.51 kg)
Enclosure type	Varies on option chosen
Installation location	Service entrance equipment, primary distribution equipment – Rated for UL and NEC 2020 Type 2 installation locations
Mounting method	Dual mounting flanges / ¾" NPT offset nipple
Operating temperature	-40 °F to 149 °F (-40 °C to 65 °C)
Altitude	0–12,000 ft. (3.66 km)
Product design	Thermal fuse technology
Regulations and certifications	
UL 1449 4th edition	VZCA: E320456 Type 2
cUL, CSA C22.2	VZCA7: E320456 Type 2
UL 1283	FOKY: E320456 Type 2
UL 96A	Yes
IEEE C62.62, C62.72	Yes
Listed by	UL

Legacy GE

THE series SPD



Wall-mount SPD

- UL Listed 1449 4th Edition, Type 2
- cUL Listed, CSA C22.2
- UL 96A, for use in lightning protection systems
- UL Recognized 200 kAIC surge-rated fuses in combination with patented thermal fuse technology
- Standard features include a surge counter, audible alarm, indicating lights, dry contacts and NEMA 4 painted steel enclosure
- 10-year limited warranty
- xxx per phase/ xxx per mode

Voltage	Configuration	Part number
240/120	1-phase, 3-wire + ground	THE120Sxxx WMN
208Y/120	3-phase, 4-wire + ground	THE120Yxxx WMN
380Y/220	3-phase, 4-wire + ground	THE220Yxxx WMN
240 Delta	3-phase, 3-wire + ground	THE240Dxxx WMN
240/120 Hi-Leg Delta	3-phase, 4-wire + ground	THE240Hxxx WMN
415Y/240	3-phase, 4-wire + ground	THE240Yxxx WMN
480Y/277	3-phase, 4-wire + ground	THE277Yxxx WMN
600Y/347	3-phase, 4-wire + ground	THE347Yxxx WMN
480 Delta	3-phase, 3-wire + ground	THE480Dxxx WMN
600 Delta	3-phase, 3-wire + ground	THE600Dxxx WMN
Desired kA		**xxx Code**
125 per mode		125
150 per mode		150
200 per mode		200
250 per mode		250
300 per mode		300
Option		**Suffix**
Painted steel, NEMA 4*		4S
Stainless steel, NEMA 4X		4X

* Standard enclosure

Electrical characteristics	
Maximum surge current rating	xxx per phase/ xxx per mode 250 kA per phase/ 125 kA per mode 300 kA per phase/ 150 kA per mode 400 kA per phase/ 200 kA per mode 500 kA per phase/ 250 kA per mode 600 kA per phase/ 300 kA per mode
Nominal discharge current rating (L-N)	20 kA
Operating frequency	50–60 Hz
Surge life (IEEE C62.41 - C3 10 kA)	≥20,000 impulses
Connection method	#6 to 2/0 AWG conductors, parallel connected
Modes of protection	All modes (L-N, L-G, N-G, L-L)
Fault rating (SCCR)	200 kAIC (60 A breaker required as a local disconnect means)
Standard monitoring	Status indicator lights (one per phase) and red service light Audible alarm with silencer and test switch Contacts for remote monitoring (2 amp, 125 V AC)–(1 amp, 30 V DC) 6-digit LCD re-settable surge event counter
EMI / RFI filter attenuation	
Maximum attenuation frequency	-44 dB at 50–100 kHz
Mechanical characteristics	
Weight	50 lbs. (22.68 kg)
Enclosure type	Varies on option chosen
Installation location	Service entrance equipment, primary distribution equipment – Rated for UL and NEC 2020 Type 2 installation locations
Mounting method	Dual mounting flanges / ¾" NPT offset nipple
Operating temperature	-40 °F to 149 °F (-40 °C to 65 °C)
Altitude	0–12,000 ft. (3.66 km)
Product design	Thermal fuse technology
Regulations and certifications	
UL 1449 4th edition	VZCA: E320456 Type 2
cUL, CSA C22.2	VZCA7: E320456 Type 2
UL 1283	Yes
UL 96A	Yes
IEEE C62.62, C62.72	Yes
Listed by	UL

Legacy GE

TLE series SPD



Wall-mount SPD

- UL Listed 1449 4th Edition, Type 2
- cUL Listed, CSA C22.2
- Compact and economical design for use at medium-exposure distribution or branch panels
- Patented thermal fuse technology
- Standard features include status indicating LEDs, form C dry contacts for remote monitoring and NEMA 12 painted steel enclosure
- 10-year limited warranty
- xxx per phase/ xxx per mode

Voltage	Configuration	Part number
240/120	1-phase, 3-wire + ground	TLE120Sxxx WM
208Y/120	3-phase, 4-wire + ground	TLE120Yxxx WM
380Y/220	3-phase, 4-wire + ground	TLE220Yxxx WM
240 Delta	3-phase, 3-wire + ground	TLE240Dxxx WM
240/120 Hi-Leg Delta	3-phase, 4-wire + ground	TLE240Hxxx WM
415Y/240	3-phase, 4-wire + ground	TLE240Yxxx WM
480Y/277	3-phase, 4-wire + ground	TLE277Yxxx WM
480 Delta	3-phase, 3-wire + ground	TLE480Dxxx WM
Desired kA		**xxx Code**
25 per mode		025
50 per mode		050

Electrical characteristics	
Maximum surge current rating	xxx per phase/ xxx per mode 50 kA per phase/ 25 kA per mode 100 kA per phase/ 50 kA per mode
Nominal discharge current rating (L-N)	10 kA
Operating frequency	50–60 Hz
Surge life (IEEE C62.41 - C3 10 kA)	≥3,500 impulses
Connection method	#10 AWG conductors, parallel connected
Modes of protection	All modes (L-N, L-G, N-G, L-L)
Fault rating (SCCR)	65 kA (30 A breaker required)
Standard monitoring	Status indicator lights (one per phase) Standard dry (form C) relay contacts
Mechanical characteristics	
Weight	17 lbs. (7.7 kg)
Enclosure type	Painted steel, NEMA 12
Installation location	Secondary distribution equipment, branch panels – Rated for UL and NEC 2020 Type 2 installation locations
Mounting method	Dual mounting flanges / ¾" NPT offset nipple
Operating temperature	-40 °F to 149 °F (-40 °C to 65 °C)
Altitude	0–12,000 ft. (3.66 km)
Product design	Thermal fuse technology
Regulations and certifications	
UL 1449 4th edition	VZCA: E320456 Type 2
cUL, CSA C22.2	VZCA7: E320456 Type 2
IEEE C62.62, C62.72	Yes
Listed by	UL

Legacy GE

TME series SPD



Wall-mount SPD

- UL Listed 1449 4th Edition, Type 2
- cUL Listed, CSA C22.2
- UL 96A, for use in lightning protection systems
- Compact and economical design for use at medium-exposure distribution or branch panels
- Standard features include status indicating LEDs, form C dry contacts for remote monitoring and NEMA 12 painted steel enclosure
- 10-year limited warranty
- xxx per phase/ xxx per mode

Voltage	Configuration	Part number
240/120	1-phase, 3-wire + ground	TME120Sxxx WM
208Y/120	3-phase, 4-wire + ground	TME120Yxxx WM
380Y/220	3-phase, 4-wire + ground	TME220Yxxx WM
240 Delta	3-phase, 3-wire + ground	TME240Dxxx WM
240/120 Hi-Leg Delta	3-phase, 4-wire + ground	TME240Hxxx WM
415Y/240	3-phase, 4-wire + ground	TME240Yxxx WM
480Y/277	3-phase, 4-wire + ground	TME277Yxxx WM
480 Delta	3-phase, 3-wire + ground	TME480Dxxx WM
Desired kA		**xxx Code**
65 per mode		065
80 per mode		080
100 per mode		100

Electrical characteristics	
Maximum surge current rating	xxx per phase/ xxx per mode 130 kA per phase/ 65 kA per mode 160 kA per phase/ 80 kA per mode 200 kA per phase/ 100 kA per mode
Nominal discharge current rating (L-N)	20 kA
Operating frequency	50–60 Hz
Surge life (IEEE C62.41 - C3 10 kA)	≥5,000 impulses
Connection method	#10 AWG conductors, parallel connected
Modes of protection	All modes (L-N, L-G, N-G, L-L)
Fault rating (SCCR)	65 kA (30 A breaker required)
Standard monitoring	Status indicator lights (one per phase) Standard dry (form C) relay contacts
EMI / RFI filter attenuation	
Maximum attenuation frequency	-44 dB at 50 kHz–100 MHz
Mechanical characteristics	
Weight	17 lbs. (7.7 kg)
Enclosure type	Painted steel, NEMA 12
Installation location	Service entrance equipment, primary distribution equipment – Rated for UL and NEC 2020 Type 2 installation locations
Mounting method	Dual mounting flanges / ¾" NPT offset nipple
Operating temperature	-40 °F to 149 °F (-40 °C to 65 °C)
Altitude	0–12,000 ft. (3.66 km)
Product design	Thermal fuse technology
Regulations and certifications	
UL 1449 4th edition	VZCA: E320456 Type 2
cUL, CSA C22.2	VZCA7: E320456 Type 2
UL 1283	FOKY: E320456 Type 2
UL 96A	Yes
IEEE C62.62, C62.72	Yes
Listed by	UL

Legacy GE

TPME series integrated SPD



Designed to connect within ReliaGear™ panelboards

- UL Listed 1449 4th Edition, Type 1, Type 2
- cUL, CSA C22.2
- Factory installed in GE® A Series™ panels
- Connects directly to the A Series panelboard bus bars
- Standard features include a surge counter, audible alarm, indicating lights, dry contacts and NEMA 4 painted steel enclosure
- 10-year limited warranty
- xxx per phase/ xxx per mode

Voltage	Configuration	Part number
240/120	1-phase, 3-wire + ground	TPME120Sxx*
208Y/120	3-phase, 4-wire + ground	TPME120Yxx*
240 Delta	3-phase, 3-wire + ground	TPME240Dxx*
240/120 Hi-Leg Delta	3-phase, 4-wire + ground	TPME240Hxx*
415Y/240	3-phase, 4-wire + ground	TPME240Yxx*
480Y/277	3-phase, 4-wire + ground	TPME277Yxx*
380Y/220	3-phase, 4-wire + ground	TPME220Yxx*
600Y/347	3-phase, 4-wire + ground	TPME347Yxx*
480 Delta	3-phase, 3-wire + ground	TPME480Dxx*
Desired kA		**xx Code**
65 per mode		06
80 per mode		08
100 per mode		10
Options (*)		**Suffix (*)**
With UL 1283 noise filter and surge counter *		AS
Without UL 1283 noise filtering only (available in 100 kA per mode only)		ASNF
Without UL 1283 noise filter and surge counter (available in 100 kA per mode only)		ASNC

AST1
Full featured with UL 1283 noise filtering and surge counter for UL Type 1 locations

* Standard option

Electrical characteristics	
Maximum surge current rating	xxx per phase/ xxx per mode mode 130 kA per phase/ 65 kA per mode 160 kA per phase/ 80 kA per mode 200 kA per phase/ 100 kA per mode
Nominal discharge current rating (L-N)	20 kA
Operating frequency	50–60 Hz
Surge life (IEEE C62.41 - C3 10 kA)	≥5,000 impulses
Connection method	#6 to 2/0 AWG conductors, parallel connected
Modes of protection	All modes (L-N, L-G, N-G, L-L)
Fault rating (SCCR)	200 kAIC
Standard monitoring	Status indicator lights (one per phase) and red service light Audible alarm with silencer and test switch Contacts for remote monitoring (2 amp, 125 V AC)–(1 amp, 30 V DC) 6-digit LCD re-settable surge event counter
EMI / RFI filter attenuation	
Maximum attenuation frequency	-50 dB at 100 kHz
Mechanical characteristics	
Weight	13 lbs. (5.9 kg)
Enclosure type	Painted steel, NEMA 12
Installation location	Service entrance equipment, primary distribution equipment, secondary distribution equipment, lighting panels – Rated for UL and NEC 2008 Type 1 and Type 2 installation locations
Mounting method	Bolts onto electrical panel interior frame
Operating temperature	-40 °F to 149 °F (-40 °C to 65 °C)
Altitude	0–12,000 ft. (3.66 km)
Product design	Individually fused thermally protected MOV technology
Regulations and certifications	
UL 1449 4th edition	VZCA2: E320456 Type 1 / Type 2
cUL, CSA C22.2	VZCA8: E320456 Type 1 / Type 2
UL 1283	FOKY2: E320456 Type 2
UL 96A	Yes
IEEE C62.62, C62.72, C62.41	Yes
Listed by	UL

Legacy GE

TPHE series integrated SPD



Designed for ABB distribution equipment

- UL Listed 1449 4th Edition, Type 1, Type 2
- cUL, CSA C22.2
- Connect to the panelboard or switchboard bus bars
- Thermally protected MOV design eliminates the need for additional upstream over-current protection
- Standard features include a surge counter, audible alarm, indicating lights, dry contacts and NEMA 4 painted steel enclosure
- 10-year limited warranty
- xxx per phase/ xxx per mode

Voltage	Configuration	Part number
240/120	1-phase, 3-wire + ground	TPHE120Sxx*
208Y/120	3-phase, 4-wire + ground	TPHE120Yxx*
380Y/220	3-phase, 4-wire + ground	TPHE220Yxx*
240 Delta	3-phase, 3-wire + ground	TPHE240Dxx*
240/120 Hi-Leg Delta	3-phase, 4-wire + ground	TPHE240Hxx*
415Y/240	3-phase, 4-wire + ground	TPHE240Yxx*
480Y/277	3-phase, 4-wire + ground	TPHE277Yxx*
600Y/347	3-phase, 4-wire + ground	TPHE347Yxx*
480 Delta	3-phase, 3-wire + ground	TPHE480Dxx*
Desired kA		**xx Code**
65 per mode		06
80 per mode		08
100 per mode		10

Options	Mounting	UL Type	Suffix (*)
ABB Spectra power panels	Integral	Type 2	PP
ABB motor control centers	Integral	Type 2	ME
ABB LV switchgear	Integral	Type 2	SG
ABB Spectra power panels	Integral	Type 1	PPT1
ABB motor control centers	Integral	Type 1	MET1
ABB LV switchgear	Integral	Type 1	SGT1

Electrical characteristics	
Maximum surge current rating	xxx per phase/ xxx per mode 130 kA per phase/ 65 kA per mode 160 kA per phase/ 80 kA per mode 200 kA per phase/ 100 kA per mode
Nominal discharge current rating (L-N)	20 kA
Operating frequency	50–60 Hz
Surge life (IEEE C62.41 - C3 10 kA)	≥5,000 impulses
Connection method	#6 to 2/0 AWG conductors, parallel connected
Modes of protection	All modes (L-N, L-G, N-G, L-L)
Fault rating (SCCR)	200 kAIC
Standard monitoring	Status indicator lights (one per phase) and red service light Audible alarm with silencer and test switch Contacts for remote monitoring (2 amp, 125 V AC)–(1 amp, 30 V DC) 6-digit LCD re-settable surge event counter
EMI / RFI filter attenuation	
Maximum attenuation frequency	-50 dB at 100 kHz
Mechanical characteristics	
Weight	24 lbs. (10.89 kg)
Installation location	Service entrance equipment, primary distribution equipment – Rated for UL and NEC 2008 Type 1 and Type 2 installation locations
Mounting method	Bolts onto electrical panel interior frame
Operating temperature	-40 °F to 149 °F (-40 °C to 65 °C)
Altitude	0–12,000 ft. (3.66 km)
Product design	Individually fused thermally protected MOV technology
Regulations and certifications	
UL 1449 4th edition	VZCA2: E320456 Type 1 / Type 2
cUL, CSA C22.2	VZCA8: E320456 Type 1 / Type 2
UL 1283	FOKY2: E320456 Type 2
UL 96A	Yes
IEEE C62.62, C62.72, C62.41	Yes
Listed by	UL

Legacy GE

TPME series integrated SPD



Designed for ABB distribution equipment

- UL Listed 1449 4th Edition, Type 2
- cUL, CSA C22.2
- Connect to the panelboard or switchboard bus bars
- Thermally protected MOV design eliminates the need for additional upstream over-current protection
- Standard features include a surge counter, audible alarm, indicating lights, dry contacts and integral surge-rated disconnect
- 10-year limited warrant
- xxx per phase/ xxx per mode

Voltage	Configuration	Part number
240/120	1-phase, 3-wire + ground	TPME120Sxx*
208Y/120	3-phase, 4-wire + ground	TPME120Yxx*
380Y/220	3-phase, 4-wire + ground	TPME220Yxx*
240 Delta	3-phase, 3-wire + ground	TPME240Dxx*
240/120 Hi-Leg Delta	3-phase, 4-wire + ground	TPME240Hxx*
415Y/240	3-phase, 4-wire + ground	TPME240Yxx*
480Y/277	3-phase, 4-wire + ground	TPME277Yxx*
600Y/347	3-phase, 4-wire + ground	TPME347Yxx*
480 Delta	3-phase, 3-wire + ground	TPME480Dxx*

Desired kA	xx Code
125 per mode	12
150 per mode	15
200 per mode	20
250 per mode	25
300 per mode	30

Options	Mounting	UL Type	Suffix (*)
ABB Spectra power panels	Integral	Type 2	PP
ABB motor control centers	Integral	Type 2	ME
ABB LV switchgear	Integral	Type 2	SG
ABB Spectra power panels	Integral	Type 1	PPT1
ABB motor control centers	Integral	Type 1	MET1
ABB LV switchgear	Integral	Type 1	SGT1

Electrical characteristics	
Maximum surge current rating	xxx per phase/ xxx per mode 250 kA per phase/ 125 kA per mode 300 kA per phase/ 150 kA per mode 400 kA per phase/ 200 kA per mode 500 kA per phase/ 250 kA per mode 600 kA per phase/ 300 kA per mode
Nominal discharge current rating (L-N)	20 kA
Operating frequency	50–60 Hz
Surge life (IEEE C62.41 - C3 10 kA)	≥20,000 impulses
Connection method	#6 to 2/0 AWG conductors, parallel connected
Modes of protection	All modes (L-N, L-G, N-G, L-L)
Fault rating (SCCR)	200 kAIC
Standard monitoring	Status indicator lights (one per phase) and red service light Audible alarm with silencer and test switch Contacts for remote monitoring (2 amp, 125 V AC)–(1 amp, 30 V DC) 6-digit LCD re-settable surge event counter
EMI / RFI filter attenuation	
Maximum attenuation frequency	-50 dB at 100 kHz
Mechanical characteristics	
Weight	24 lbs. (10.89 kg)
installation location	Service entrance equipment, primary distribution equipment – Rated for UL and NEC 2020 Type 1 and Type 2 installation locations
Mounting method	Bolts onto electrical panel interior frame
Operating temperature	-40 °F to 149 °F (-40 °C to 65 °C)
Altitude	0–12,000 ft. (3.66 km)
Product design	Individually fused thermally protected MOV technology
Regulations and certifications	
UL 1449 4th edition	VZCA2: E320456 Type 1 / Type 2
UL 1283	VZCA8: E320456 Type 1 / Type 2
cUL, CSA C22.2	FOKY2: E320456 Type 2
UL 96A	Yes
IEEE C62.62, C62.72, C62.41	Yes
Listed by	UL

Legacy GE

TPME series integrated SPD



Designed for ABB distribution equipment

- UL Listed 1449 4th Edition, Type 1, Type 2
- cUL, CSA C22.2
- Connect to the panelboard or switchboard bus bars
- Thermally protected MOV design eliminates the need for additional upstream over-current protection
- Standard features include a surge counter, audible alarm, indicating lights, dry contacts and NEMA 4 painted steel enclosure
- 10-year limited warrant

Voltage	Configuration	Part number
240/120	1-phase, 3-wire + ground	TPME120Sxx*
208Y/120	3-phase, 4-wire + ground	TPME120Yxx*
380Y/220	3-phase, 4-wire + ground	TPME220Yxx*
240 Delta	3-phase, 3-wire + ground	TPME240Dxx*
240/120 Hi-Leg Delta	3-phase, 4-wire + ground	TPME240Hxx*
415Y/240	3-phase, 4-wire + ground	TPME240Yxx*
480Y/277	3-phase, 4-wire + ground	TPME277Yxx*
600Y/347	3-phase, 4-wire + ground	TPME347Yxx*
480 Delta	3-phase, 3-wire + ground	TPME480Dxx*

Desired kA	xx Code
65 per mode	06
80 per mode	08
1200 per mode	10

Options	Mounting	UL Type	Suffix (*)
ReliaGear neXT power panel	Integral	Type 2 Type 1	NSBX NSBXT1

Electrical characteristics	
Maximum surge current rating	xxx per phase/ xxx per mode 130 kA per phase/65 kA per mode 160 kA per phase/80 kA per mode 200 kA per phase/100 kA per mode
Nominal discharge current rating (L-N)	20 kA
Operating frequency	50–60 Hz
Surge life (IEEE C62.41 - C3 10 kA)	≥5,000 impulses
Connection method	#6 to 2/0 AWG conductors, parallel connected
Modes of protection	All modes (L-N, L-G, N-G, L-L)
Fault rating (SCCR)	200 kAIC
Standard monitoring	Status indicator lights (one per phase) and red service light Audible alarm with silencer and test switch Contacts for remote monitoring (2 amp, 125 V AC)–(1 amp, 30 V DC) 6-digit LCD re-settable surge event counter
EMI / RFI filter attenuation	
Maximum attenuation frequency	-50 dB at 100 kHz
Mechanical characteristics	
installation location	Service entrance equipment, primary distribution equipment – Rated for UL and NEC 2008 Type 1 and Type 2 installation locations
Mounting method	Bolts onto electrical panel interior frame
Operating temperature	-40 °F to 149 °F (-40 °C to 65 °C)
Altitude	0–12,000 ft. (3.66 km)
Product design	Individually fused thermally protected MOV technology
Regulations and certifications	
UL 1449 4th edition	VZCA2: E320456 Type 1 / Type 2
cUL, CSA C22.2	VZCA8: E320456 Type 1 / Type 2
UL 1283	FOKY2: E320456 Type 2
UL 96A	Yes
IEEE C62.62, C62.72, C62.41	Yes
Listed by	UL

Legacy GE

TPME series integrated SPD



Designed for ABB distribution equipment

- UL Listed 1449 4th Edition, Type 1, Type 2
- cUL, CSA C22.2
- Connect to the panelboard or switchboard bus bars
- Thermally protected MOV design eliminates the need for additional upstream over-current protection
- Standard features include a surge counter, audible alarm, indicating lights, dry contacts and NEMA 4 painted steel enclosure
- 10-year limited warrant

Voltage	Configuration	Part number
240/120	1-phase, 3-wire + ground	TPME120Sxx*
208Y/120	3-phase, 4-wire + ground	TPME120Yxx*
380Y/220	3-phase, 4-wire + ground	TPME220Yxx*
240 Delta	3-phase, 3-wire + ground	TPME240Dxx*
240/120 Hi-Leg Delta	3-phase, 4-wire + ground	TPME240Hxx*
415Y/240	3-phase, 4-wire + ground	TPME240Yxx*
480Y/277	3-phase, 4-wire + ground	TPME277Yxx*
600Y/347	3-phase, 4-wire + ground	TPME347Yxx*
480 Delta	3-phase, 3-wire + ground	TPME480Dxx*

Desired kA	xx Code
125 per mode	12
150 per mode	15
200 per mode	20
250 per mode	25
300 per mode	30

Options	Mounting	UL Type	Suffix (*)
ReliaGear neXT power panel	Integral	Type 2 Type 1	NSBX NSBXT1

Electrical characteristics	
Maximum surge current rating	xxx per phase/ xxx per mode 130 kA per phase/65 kA per mode 160 kA per phase/80 kA per mode 200 kA per phase/100 kA per mode
Nominal discharge current rating (L-N)	20 kA
Operating frequency	50–60 Hz
Surge life (IEEE C62.41 - C3 10 kA)	≥20,000 impulses
Connection method	#6 to 2/0 AWG conductors, parallel connected
Modes of protection	All modes (L-N, L-G, N-G, L-L)
Fault rating (SCCR)	200 kAIC
Standard monitoring	Status indicator lights (one per phase) and red service light Audible alarm with silencer and test switch Contacts for remote monitoring (2 amp, 125 V AC)–(1 amp, 30 V DC) 6-digit LCD re-settable surge event counter
EMI / RFI filter attenuation	
Maximum attenuation frequency	-50 dB at 100 kHz
Mechanical characteristics	
installation location	Service entrance equipment, primary distribution equipment – Rated for UL and NEC 2020 Type 1 and Type 2 installation locations
Mounting method	Bolts onto electrical panel interior frame
Operating temperature	-40 °F to 149 °F (-40 °C to 65 °C)
Altitude	0–12,000 ft. (3.66 km)
Product design	Individually fused thermally protected MOV technology
Regulations and certifications	
UL 1449 4th edition	VZCA2: E320456 Type 1 / Type 2
cUL, CSA C22.2	VZCA8: E320456 Type 1 / Type 2
UL 1283	FOKY2: E320456 Type 2
UL 96A	Yes
IEEE C62.62, C62.72, C62.41	Yes
Listed by	UL

Legacy GE

9" box extension SPD



Designed for ABB distribution equipment

- UL Listed 1449 4th Edition, Type 2
- cUL, CSA C22.2
- The 9" box extension SPD is field installed and attaches neatly to the top or bottom of a standard panel
- The true maximum surge current rating, unlimited by fusing, has been proven successful in third-party tests
- Standard features include a surge counter, audible alarm, indicating lights and dry contacts
- 10-year limited warranty
- xxx per phase/ xxx per mode

Voltage	Configuration	Part number
240/120	1-phase, 3-wire + ground	TPME120SxxBX*
208Y/120	3-phase, 4-wire + ground	TPME120YxxBX*
380Y/220	3-phase, 4-wire + ground	TPME220YxxBX*
240 Delta	3-phase, 3-wire + ground	TPME240DxxBX*
240/120 Hi-Leg Delta	3-phase, 4-wire + ground	TPME240HxxBX*
415Y/240	3-phase, 4-wire + ground	TPME240YxxBX*
480Y/277	3-phase, 4-wire + ground	TPME277YxxBX*
600Y/347	3-phase, 4-wire + ground	TPME347YxxBX*
480 Delta	3-phase, 3-wire + ground	TPME480DxxBX*
Desired kA		**xx Code**
65 per mode		06
80 per mode		08
100 per mode		10
Options		**Suffix (*)**
Surface mounted, no display		9S
Surface mounted, display access		9WS
Flush mounted , no display		9F
Flush mounted, display access		9WF

Electrical characteristics	
Maximum surge current rating	xxx per phase/ xxx per mode 130 kA per phase/ 65 kA per mode 160 kA per phase/ 80 kA per mode 200 kA per phase/ 100 kA per mode
Nominal discharge current rating (L-N)	20 kA
Operating frequency	50–60 Hz
Connection method	#6 to 2/0 AWG conductors, parallel connected Note: A dedicated circuit breaker, rated 60 A or above, is recommended to provide a local disconnecting means for the SPD.
Modes of protection	All modes (L-N, L-G, N-G, L-L)
Fault rating (SCCR)	65 kAIC
Standard monitoring	Status indicator lights (one per phase) and red service light Audible alarm with silencer and test switch Contacts for remote monitoring (2 amp, 125 V AC)–(1 amp, 30 V DC) 6-digit LCD re-settable surge event counter
EMI / RFI filter attenuation	
Maximum attenuation frequency	-50 dB at 100 kHz
Mechanical characteristics	
Weight	31 lbs. (14.1 kg)
Enclosure type	NEMA 1
Installation location	Service entrance equipment, primary distribution equipment - Rated for UL and NEC 2020 Type 2 installation locations
Mounting method	Either top or bottom of A-Series panelboard only
Operating temperature	-40 °F to 149 °F (-40°C to 65 °C)
Altitude	0–12,000 ft. (3.66 km)
Product design	Individually fused thermally protected MOV technology
Regulations and certifications	
UL 1449 4th edition	XUPD.E248748 Type 2
UL 1283	Yes
UL 96A	Yes
cUL, CSA C22.2	VZCA7: E320456 Type 2
IEEE C62.62, C62.72	Yes
Listed by	UL

Legacy GE

9" box extension SPD



Designed for ABB distribution equipment

- UL Listed 1449 4th Edition, Type 2
- cUL, CSA C22.2
- The 9" box extension SPD is field installed and attaches neatly to the top or bottom of a standard panel
- The true maximum surge current rating, unlimited by fusing, has been proven successful in third-party tests
- Standard features include a surge counter, audible alarm, indicating lights and dry contacts
- 10-year limited warranty
- xxx per phase/ xxx per mode

Voltage	Configuration	Part number
240/120	1-phase, 3-wire + ground	TPHE120SxxBX*
208Y/120	3-phase, 4-wire + ground	TPHE120YxxBX*
380Y/220	3-phase, 4-wire + ground	TPHE220YxxBX*
240 Delta	3-phase, 3-wire + ground	TPHE240DxxBX*
240/120 Hi-Leg Delta	3-phase, 4-wire + ground	TPHE240HxxBX*
415Y/240	3-phase, 4-wire + ground	TPHE240YxxBX*
480Y/277	3-phase, 4-wire + ground	TPHE277YxxBX*
600Y/347	3-phase, 4-wire + ground	TPHE347YxxBX*
480 Delta	3-phase, 3-wire + ground	TPHE480DxxBX*
Desired kA		**xx Code**
150 per mode		15
200 per mode		20
300 per mode		30
Options		**Suffix (*)**
Surface mounted, no display		9S
Surface mounted, display access		9WS
Flush mounted , no display		9F
Flush mounted, display access		9WF

Electrical characteristics	
Maximum surge current rating	xxx per phase/ xxx per mode 300 kA phase/150 kA per mode 400 kA phase/200 kA per mode 600 kA phase/300 kA per mode
Nominal discharge current rating (L-N)	20 kA
Operating frequency	50–60 Hz
Connection method	#6 to 2/0 AWG conductors, parallel connected Note: A dedicated circuit breaker, rated 60 A or above, is recommended to provide a local disconnecting means for the SPD.
Modes of protection	All modes (L-N, L-G, N-G, L-L)
Fault rating (SCCR)	65 kAIC
Standard monitoring	Status indicator lights (one per phase) and red service light Audible alarm with silencer and test switch Contacts for remote monitoring (2 amp, 125 V AC)–(1 amp, 30 V DC) 6-digit LCD re-settable surge event counter
EMI / RFI filter attenuation	
Maximum attenuation frequency	-50 dB at 100 kHz
Mechanical characteristics	
Weight	31 lbs. (14.1 kg)
Enclosure type	NEMA 1
Installation location	Service entrance equipment, primary distribution equipment - Rated for UL and NEC 2020 Type 2 installation locations
Mounting method	Either top or bottom of A-Series panelboard only
Operating temperature	-40 °F to 149 °F (-40°C to 65 °C)
Altitude	0–12,000 ft. (3.66 km)
Product design	Individually fused thermally protected MOV technology
Regulations and certifications	
UL 1449 4th edition	XUPD.E248748 Type 2
UL 1283	Yes
UL 96A	Yes
cUL, CSA C22.2	VZCA7: E320456 Type 2
IEEE C62.62, C62.72	Yes
Listed by	UL

Legacy GE

24" box extension SPD



Designed for ABB distribution equipment

- UL Listed 1449 4th Edition for Type 2 applications
- cUL, CSA C22.2
- This model is installed in an extended box and connects to the panelboard
- The true maximum surge current rating, unlimited by fusing, has been proven successful in third-party tests
- Standard features include a surge counter, audible alarm, indicating lights and dry contacts
- 10-year limited warranty
- xxx per phase/ xxx per mode

Voltage	Configuration	Part number
240/120	1-phase, 3-wire + ground	TPME120Sxx BX*
208Y/120	3-phase, 4-wire + ground	TPME120Yxx BX*
380Y/220	3-phase, 4-wire + ground	TPME220Yxx BX*
240 Delta	3-phase, 3-wire + ground	TPME240Dxx BX*
240/120 Hi-Leg Delta	3-phase, 4-wire + ground	TPME240Hxx BX*
415Y/240	3-phase, 4-wire + ground	TPME240Yxx BX*
480Y/277	3-phase, 4-wire + ground	TPME277Yxx BX*
600Y/347	3-phase, 4-wire + ground	TPME347Yxx BX
480 Delta	3-phase, 3-wire + ground	TPME480Dxx BX
Desired kA		**xx Code**
65 per mode		06
80 per mode		08
100 per mode		10
Options		**Suffix (*)**
Surface mounted, display access		24WS
Flush mounted, display access		24WF

Electrical characteristics	
Maximum surge current rating	xxx per phase/ xxx per mode 130 kA phase/65 kA per mode 160 kA phase/80 kA per mode 200 kA phase/100 kA per mode
Nominal discharge current rating (L-N)	20 kA
Operating frequency	50–60 Hz
Connection method	#6 to 2/0 AWG conductors, parallel connected Note: A dedicated circuit breaker, rated 60 A or above, is recommended to provide a local disconnecting means for the SPD.
Modes of protection	All modes (L-N, L-G, N-G, L-L)
Fault rating (SCCR)	200 kAIC
Standard monitoring	Status indicator lights (one per phase) and red service light Audible alarm with silencer and test switch Contacts for remote monitoring (2 amp, 125 V AC)–(1 amp, 30 V DC) 6-digit LCD re-settable surge event counter
EMI / RFI filter attenuation	
Maximum attenuation frequency	-50 dB at 100 kHz
Mechanical characteristics	
Weight	57 lbs. (25.9 kg)
Enclosure type	NEMA 1
Installation location	Service entrance equipment, primary distribution equipment – Rated for UL and NEC 2020 Type 2 installation locations
Mounting method	Either top or bottom of A-Series panelboard only
Operating temperature	-40 °F to 149 °F (-40 °C to 65 °C)
Altitude	0–12,000 ft. (3.66 km)
Product design	Individually fused thermally protected MOV technology
Regulations and certifications	
UL 1449 4th edition	XUPD.E248748 Type 2
UL 1283	Yes
UL 96A	Yes
cUL, CSA C22.2	VZCA7: E320456 Type 2
IEEE C62.62, C62.72	Yes
Listed by	UL

Legacy GE

24" box extension SPD



Designed for ABB distribution equipment

- UL Listed 1449 4th Edition for Type 2 applications
- cUL, CSA C22.2
- This model is installed in an extended box and connects to the panelboard
- The true maximum surge current rating, unlimited by fusing, has been proven successful in third-party tests
- Standard features include a surge counter, audible alarm, indicating lights and dry contacts
- 10-year limited warranty
- xxx per phase/ xxx per mode

Voltage	Configuration	Part number
240/120	1-phase, 3-wire + ground	TPHE120SxxBX*
208Y/120	3-phase, 4-wire + ground	TPHE120YxxBX*
380Y/220	3-phase, 4-wire + ground	TPHE220YxxBX*
240 Delta	3-phase, 3-wire + ground	TPHE240DxxBX*
240/120 Hi-Leg Delta	3-phase, 4-wire + ground	TPHE240HxxBX*
415Y/240	3-phase, 4-wire + ground	TPHE240YxxBX*
480Y/277	3-phase, 4-wire + ground	TPHE277YxxBX*
600Y/347	3-phase, 4-wire + ground	TPHE347YxxBX
480 Delta	3-phase, 3-wire + ground	TPHE480DxxBX
Desired kA		**xx Code**
150 per mode		15
200 per mode		20
300 per mode		30
Options		**Suffix (*)**
Surface mounted, display access		24WS
Flush mounted, display access		24WF

Electrical characteristics	
Maximum surge current rating	xxx per phase/ half xxx per mode 300 kA per phase/ 150 kA per mode 400 kA per phase/ 200 kA per mode 600 kA per phase/ 300 kA per mode
Nominal discharge current rating (L-N)	20 kA
Operating frequency	50–60 Hz
Connection method	#6 to 2/0 AWG conductors, parallel connected Note: A dedicated circuit breaker, rated 60 A or above, is recommended to provide a local disconnecting means for the SPD.
Modes of protection	All modes (L-N, L-G, N-G, L-L)
Fault rating (SCCR)	200 kAIC
Standard monitoring	Status indicator lights (one per phase) and red service light Audible alarm with silencer and test switch Contacts for remote monitoring (2 amp, 125 V AC)–(1 amp, 30 V DC) 6-digit LCD re-settable surge event counter
EMI / RFI filter attenuation	
Maximum attenuation frequency	-50 dB at 100 kHz
Mechanical characteristics	
Weight	57 lbs. (25.9 kg)
Enclosure type	NEMA 1
Installation location	Service entrance equipment, primary distribution equipment – Rated for UL and NEC 2020 Type 2 installation locations
Mounting method	Either top or bottom of A-Series panelboard only
Operating temperature	-40 °F to 149 °F (-40 °C to 65 °C)
Altitude	0–12,000 ft. (3.66 km)
Product design	Individually fused thermally protected MOV technology
Regulations and certifications	
UL 1449 4th edition	XUPD.E248748 Type 2
UL 1283	Yes
UL 96A	Yes
cUL, CSA C22.2	VZCA7: E320456 Type 2
IEEE C62.62, C62.72	Yes
Listed by	UL

Legacy GE product
Dimensions

TPHE and TPME series integrated SPD

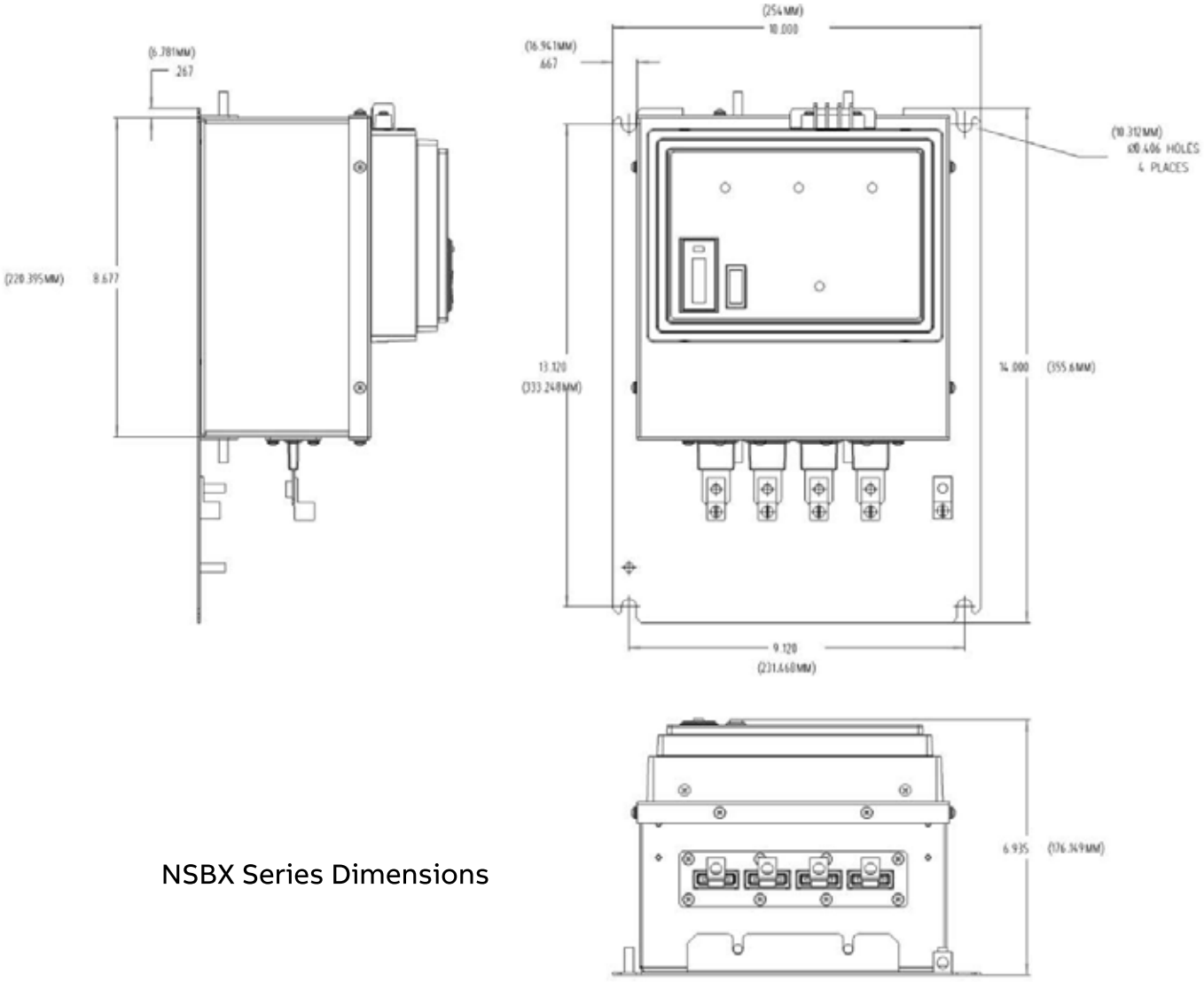

NSBX Series Dimensions

5

Legacy GE product
Dimensions

TPME and TPHE series wall-mount SPDs with enhanced thermal protection

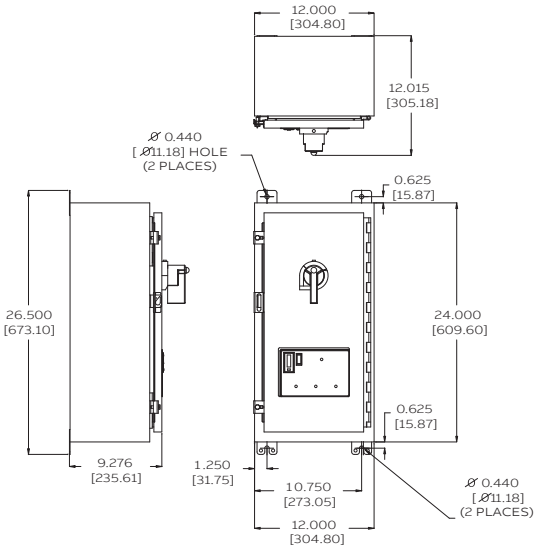

WMN1 dimensions

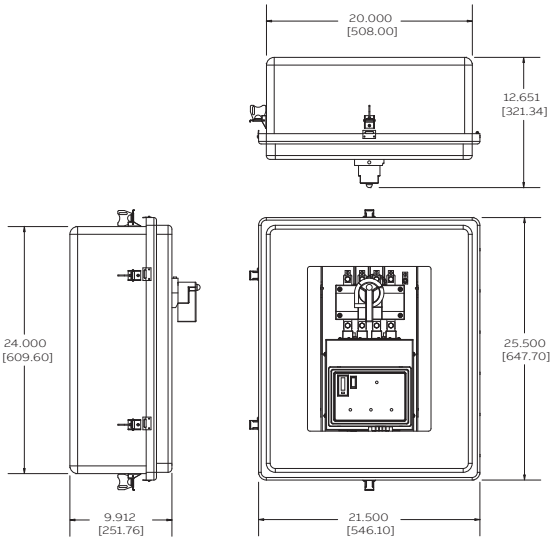

WMN4 dimensions

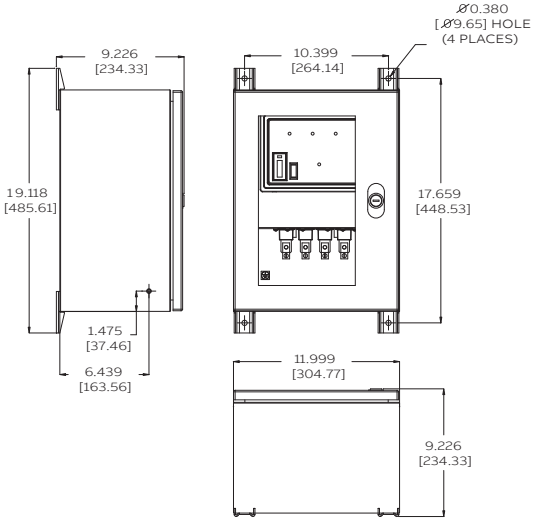

WMN4S, WMN4X dimensions

Legacy GE product
Dimensions

THE and TME series wall-mount SPDs

WMN4S,
WMN4X
Suffix

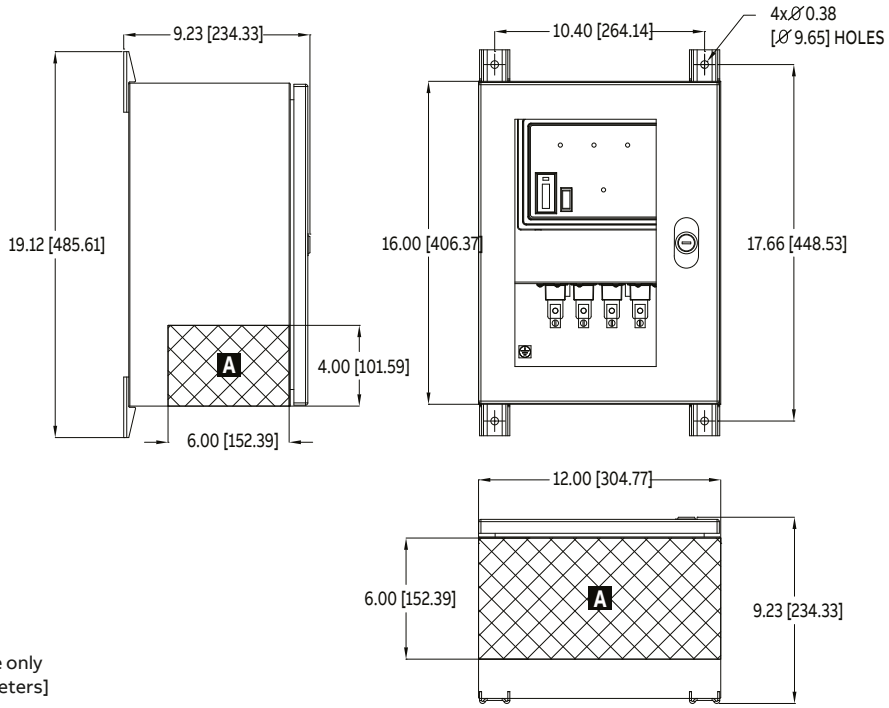

NOTE
All dimensions are for reference only and are shown in Inches [millimeters]

"A" = Recommended conduit entry areas

Refer to instruction manual for details

Legacy GE product
Dimensions

TME and TLE series wall-mount SPDs

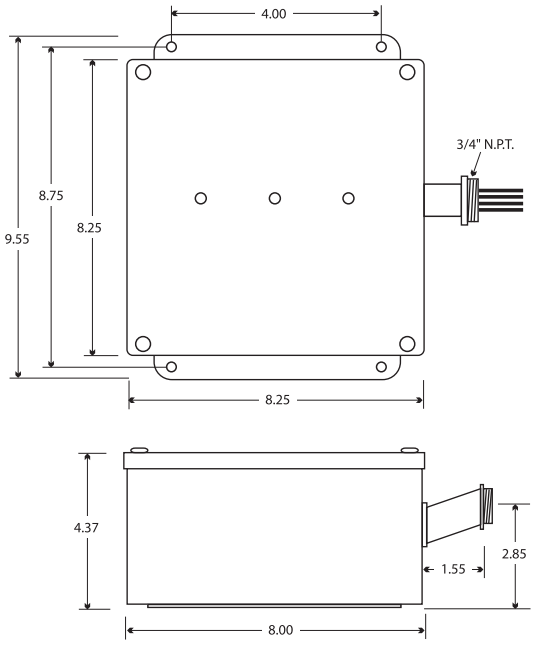

TME

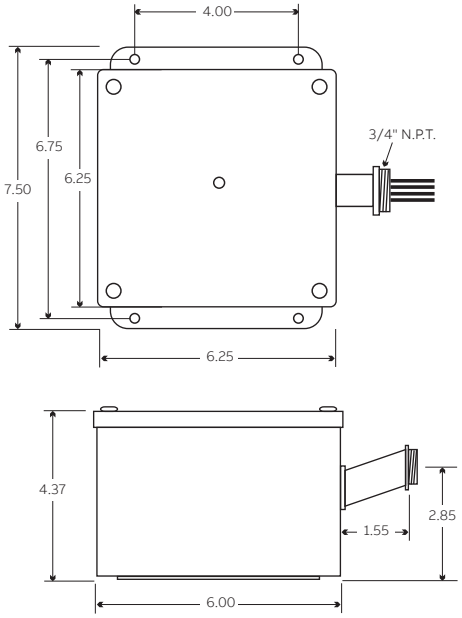

TLE

Legacy GE product
Dimensions

TPME series integrated SPD

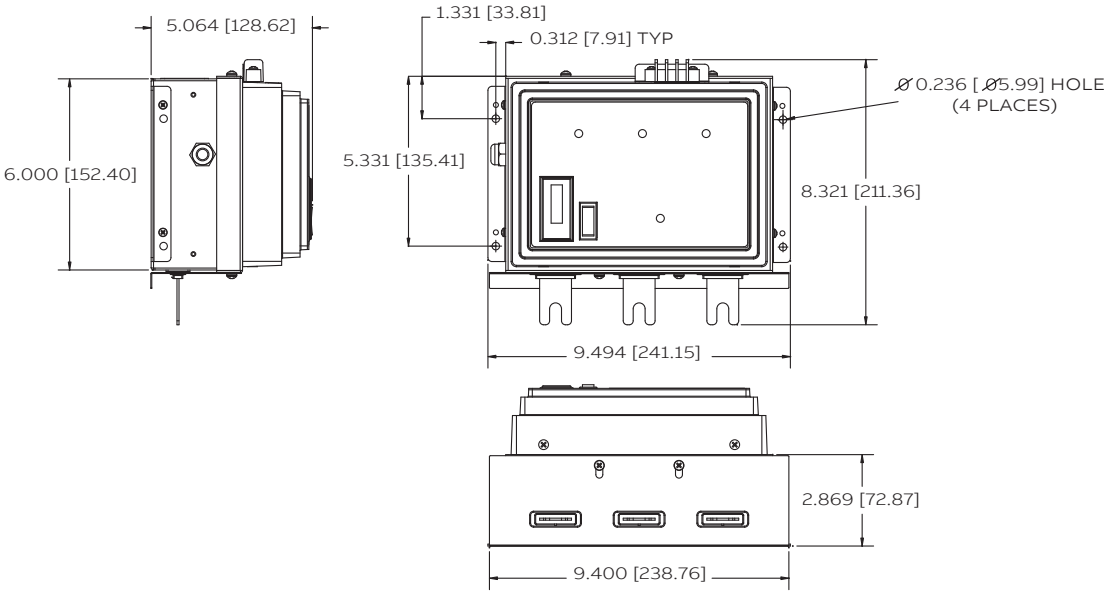

TPME and TPHE series integrated SPDs

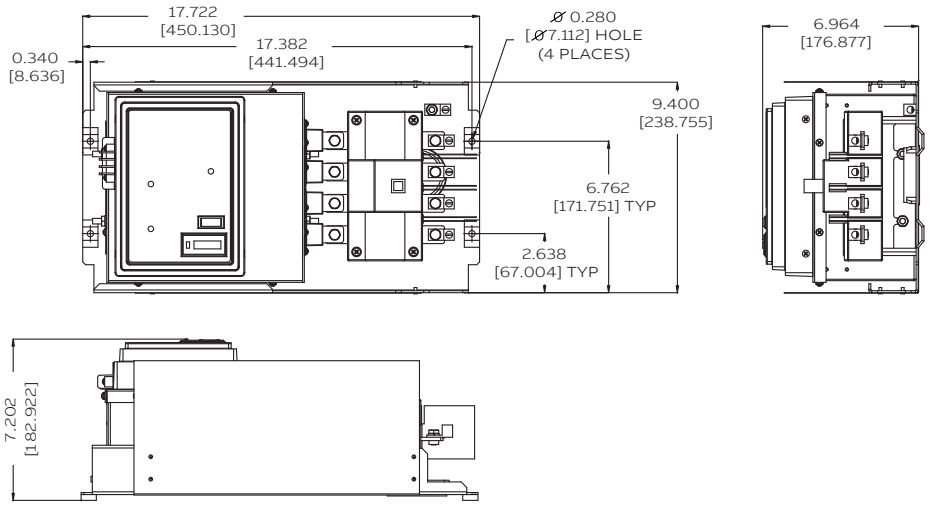

Legacy GE product
Dimensions

9" box extension SPD

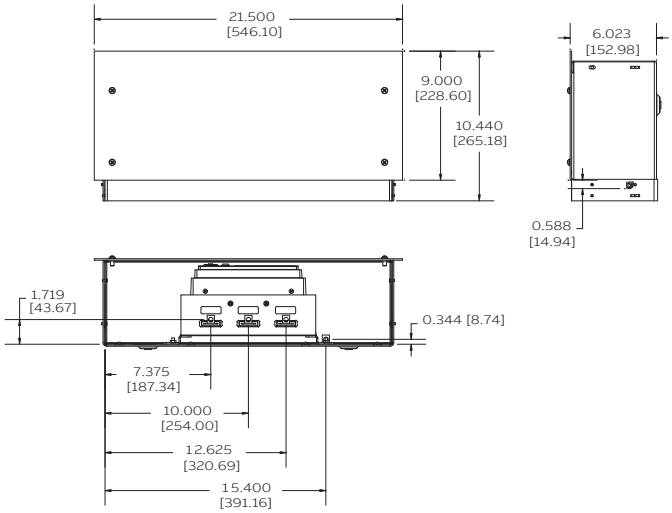

BX9F Dimensions

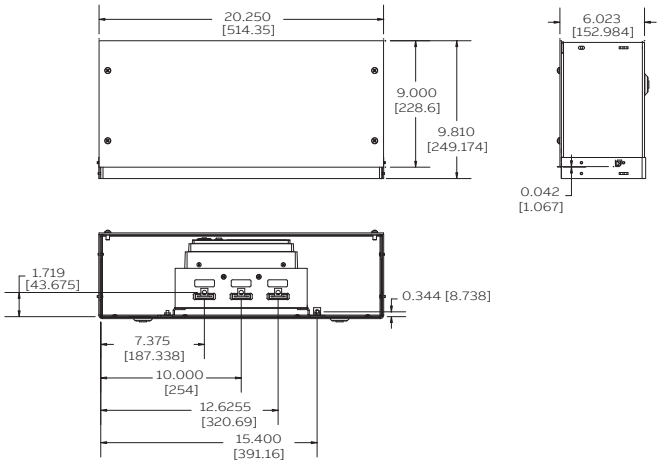

BX9S Dimensions

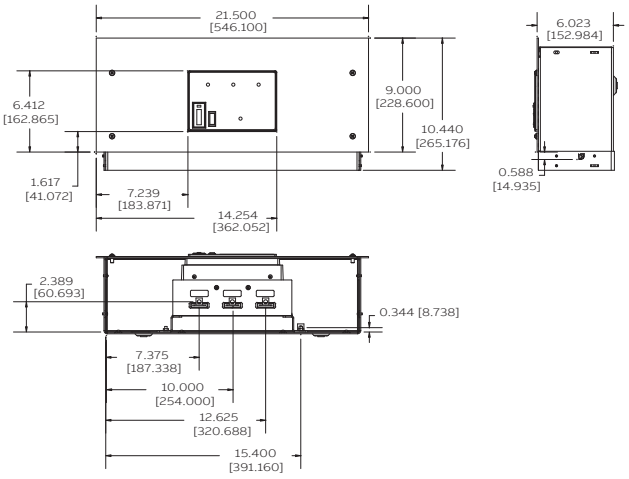

BX9WF Dimensions

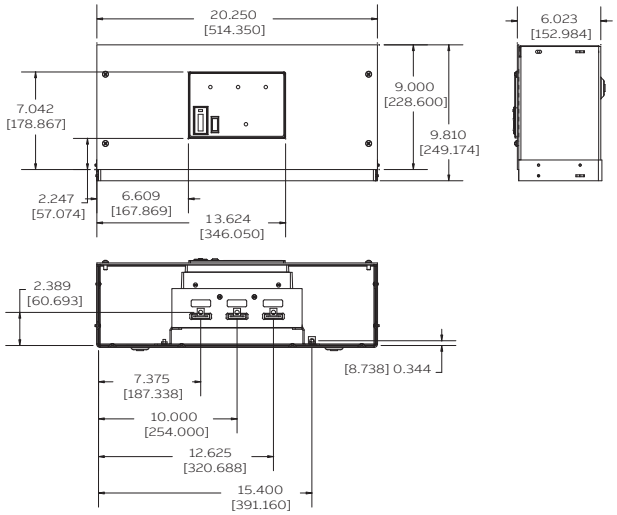

BX9WS Dimensions

Legacy GE product
Dimensions

24" box extension SPD

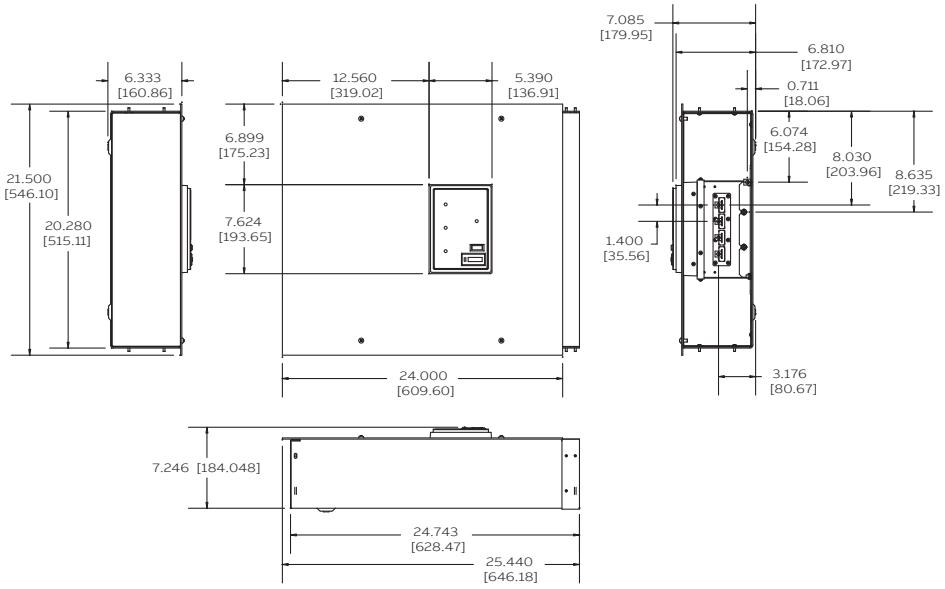

BX24WF dimensions

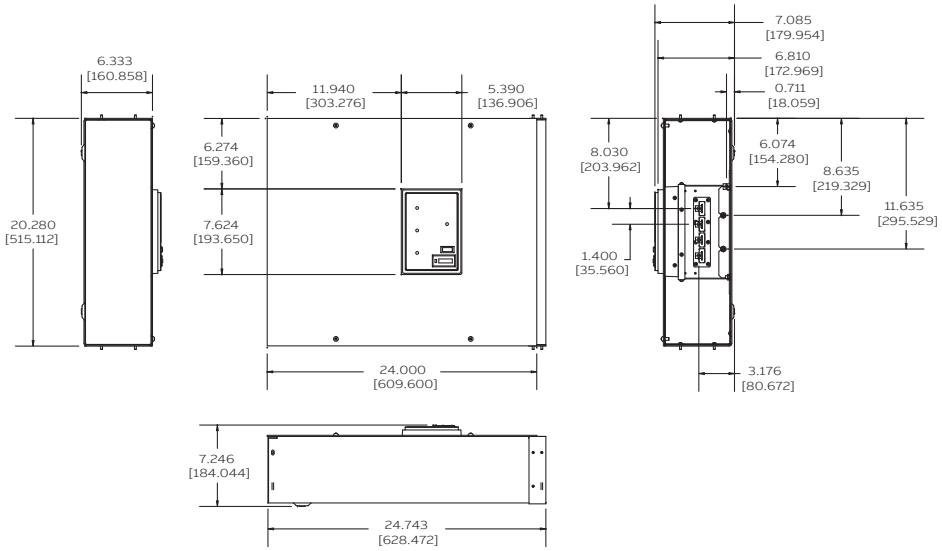

BX24WS dimensions

Notes

The ABB OVR data and telecom SPD range overview

Protecting critical electronic systems

The ABB OVR data/telecom range of SPDs are designed to protect equipment connected to data and telephone lines to complement the OVR power SPD products and offer a complete system protection solution (power & data) against surges. The comprehensive range includes protection for twisted pair data lines (including hazardous environments), computer networks, telecom systems including PBX and ISDN, CCTV, TV and RF systems.

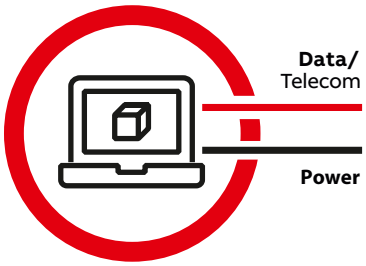

WARNING Equipment is **ONLY** protected if all incoming lines have protection fitted

To protect the electronic equipment inside a building, all cables that enter or leave the building must be protected.
Cables leaving the building can also provide a route back into the building for transients.

Data & measurement systems
- 2 wire (OVR SL series)
- 2 wire ATEX (OVR SLX series)
- 2 wire (OVR D/E/H series)
- 3 wire (OVR SL-3W series)
- 4-20 mA (OVR SL 4-20)
- 8 wire (OVR Q series)
- RTD (OVR RTD series)

Transceiver/CCTV systems
- RF (OVR RF series)
- CCTV (OVR CCTV series with OVR 240-16A)
- TV (OVR TV series)

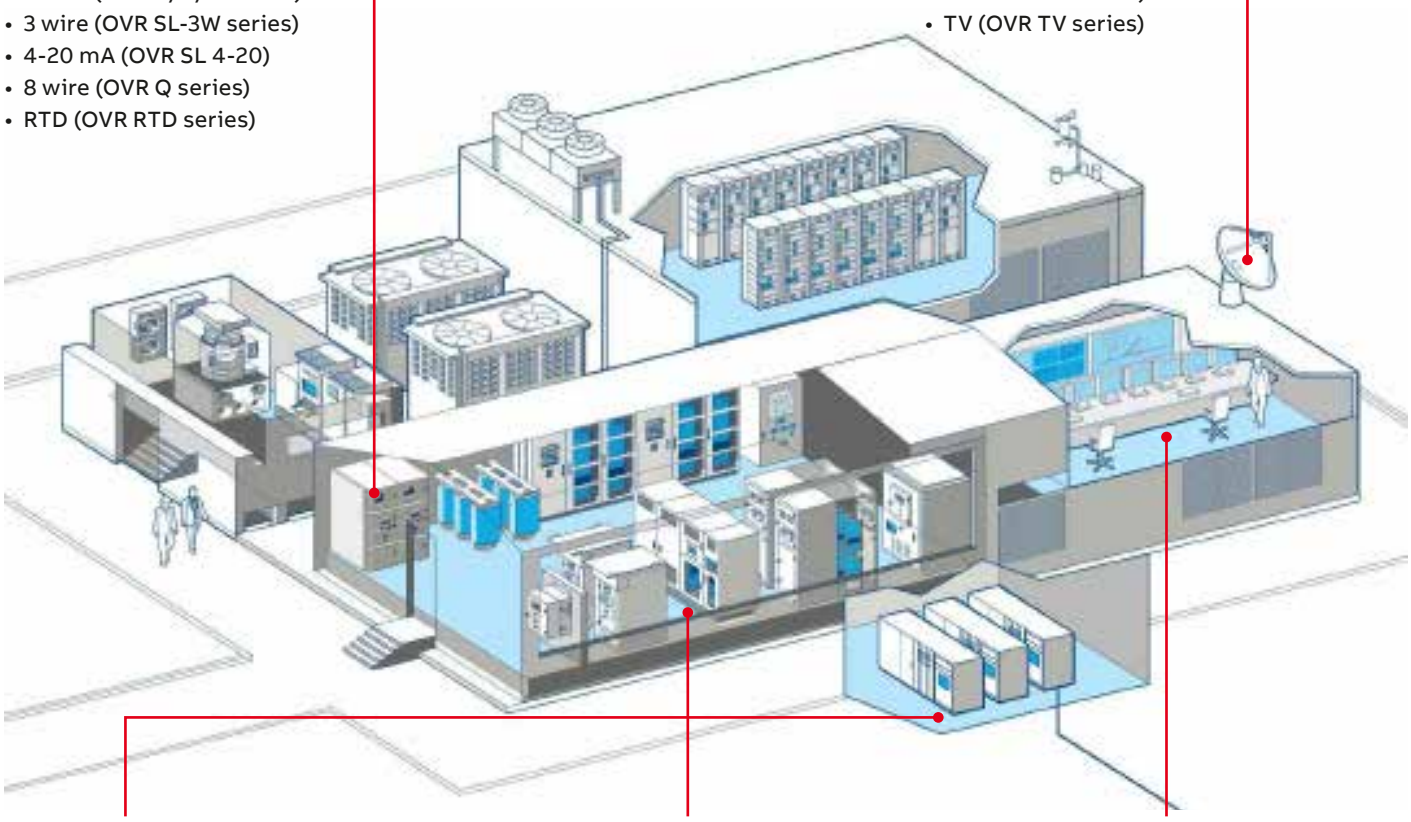

Mains power supply
- See OVR power SPD series

Telecom systems
- PBX (OVR KT series)
- RJ11 (OVR TN series)
- RJ45 (OVR ISDN series)
- 2 wire (OVR TN, OVR SLTN)
- 8 wire (OVR TNQ)

Information technology systems
- Cat 6 + PoE (OVR Cat-6 series)
- Cat 5e + PoE (OVR Cat-5e series)
- RS485/HART/Profibus (OVR RS485 series)

Protection and safety

Short Selection Guide – Surge Protection Devices OVR

PROFIBUS Systems HART Systems	 OVR RS485 Flat/DIN Mount 7TCA085400R0310	 **OVR SL RS485** Slim DIN Mount 7TCA085400R0310	 **OVR RS485Q** Multiple Lines (DIN Mount) 7TCA085400R0312				
Ethernet	 withPoE:	Cat-5 (100 Mbps) **OVR Cat-5e** 7TCA085400R0289 7TCA085400R0290	Cat-6 (1000 Mbps) **OVR Cat-6e** 7TCA085400R0291 7TCA085400R0292				
Video Surveillance CCTV	 **5V CCTV** with BNC connector, power, and telemetry line	 **OVR CCTV/B** Video signal 7TCA085400R0296	 **OVR RS485** Telemetry signal 7TCA085400R0310	 **OVR 240-16A** Power line 7TCA085460R0361	 **OVR CME4** Earth Bar 7TCA085400R0414	 **OVR WBX4/GS** Enclosure 7TCA085410R0049	CCTV Protection is also available for different voltages and twisted pair connections.
4 - 20 mA current loops	Screw terminals 30 V	 **OVR SL30L/4-20** 7TCA085400R0371					
Coaxial antennas: GSM, UMTS, Radar, Radio, TV, GPS	 Female coaxial connector:	**OVR RF 441421** BNC 7TCA085450R0066	**OVR RF AA1421** 7/16 DIN 7TCA085450R0063	**OVR RF 111421** N 7TCA085450R0065			
Telephone ISDN DSL	 **2 wire Telecom**	Screw terminals:	 **OVR TN** Flat Mount 7TCA085400R0345	 **OVR SL TN** Slim Mount 7TCA085400R0323	 **OVR SL TNL** Slim Mount with LED 7TCA085400R0418	 **OVR TNQ** Multiple Lines 7TCA085400R0344	
		RJ11, RJ45	RJ11 telephone units	**OVR TN/RJ11-6/6** 6P6C Connector 7TCA085400R0359	RJ45 network units	**OVR ISDN/RJ45-4/8** 8P4C Connector 7TCA085400R0359	
		PBX Telecom	LSA-PLUS connection	**OVR KT1** Single module 7TCA085400R0305	**OVR K10T1** 10 modules 7TCA085400R0307	**OVR KE10** Earth Bar 7TCA085400R0304	
TV: Satellite, Cable			**OVR CATV/F** Cable 7TCA085400R0293	**OVR SMATV/F** Satellite 7TCA085400R0336	**OVR TV/EURO** Antenna 7TCA085400R0334		
2 wire systems (30V)		 **OVR 30E** Flat Mount 7TCA085400R0353	 **OVR SL30** Slim Mount 7TCA085400R0363	 **OVR 30Q** Multiple Lines 7TCA085400R0341	Protection for different voltages are available		
3 wire systems (30V)		 **OVR SL30/3W** Slim Mount 7TCA085400R0331	Protection for different voltages are available				
Hazardous Areas ATEX/IEC approved		 **OVR SL15X** 15 Volt 7TCA085400R0386	**OVR SL30X** 30 Volt 7TCA085400R0387				
Resistance Temperature Detectors (RTD)		 **OVR RTD** Flat/DIN Mount 7TCA085400R0313	 **OVR SL RTD** Slim (DIN Mount) 7TCA085400R0315	 **OVR RTDQ** Multiple Lines (DIN Mount) 7TCA085400R0314			



WARNING Equipment is **ONLY** protected if all incoming lines have protection fitted

Protection and safety

Data & signal protection

OVR SL Series



LPZ 0→3 | FULL MODE Bonding + Equipment Protection | LED OPTIONAL INDICATION | SIGNAL TEST CAT D + C + B | ENHANCED Low let-through voltage | REPLACEABLE PROTECTION MODULE

LOW IN-LINE RESISTANCE 1 Ω | CURRENT RATING 750 mA | HIGH BANDWIDTH | ULTRA SLIM 7 mm WIDTH | GND | GND | UL LISTED

Combined Category D, C, B tested (to IEC/EN 61643) Surge Protection Device (SPD) suitable for twisted pair signalling applications which require either a lower in-line resistance, an increased current and/or higher bandwidth. Also suitable for DC power applications less than 0.75 Amps. Available for working voltages of up to 6, 15, 30, 50, 110 and 180 Volts, and also for global telephone applications up to 296 Volts. For use at boundaries up to LPZ 0 to protect against flashover (typically the service entrance location) through to LPZ 3 to protect sensitive electronic equipment.

Features & benefits

- Very low let-through voltage (enhanced protection to IEC/BS EN 62305) between all lines - Full Mode protection
- Full Mode design capable of handling partial lightning currents as well as allowing continual operation of protected equipment
- Repeated protection in lightning intense environments
- Ultra slim 7 mm width ideal for compact protection of large numbers of lines (e.g. process control installations)
- Optional LED status indication versions available for low current DC power applications - add L suffix to part number - e.g. OVR SL30L
- Two stage removable protection module with simple quick release mechanism allowing partial removal for easy line commissioning and maintenance as well as full removal for protection replacement
- Strong, flame retardant, polymer housing
- High maximum running current
- High bandwidth enables higher frequency (high traffic or bit rate) data communications
- Screen terminal enables easy connection of cable screen to earth
- Suitable for earthed or isolated screen systems - add /I suffix to part number for versions that require isolated screens - e.g. OVR SL30/I
- Built-in innovative DIN rail foot with locking feature for simple positioning and clip-on mounting to top hat DIN rails
- 4 mm2 terminals allow for larger cross section wiring, stranded wires terminated with ferrules or fitting two wires into a single terminal
- Convenient earthing through DIN foot and/or earth terminal
- Very low (1 Ω) in-line resistance allows resistance critical applications (e.g. alarm loops) to be protected
- OVR SL06-SL180 (UL) have UL497B approval under file E506434 (OVR SLTN not included)

Application

Use these SPDs where installation space is at a premium and large numbers of lines require protection (e.g. process control, high speed digital communication equipment or systems with long signal lines).

Accessories

For replacement SPD modules (/M), spare base units (/B) and weatherproof enclosures (WBX) see ABB order code table overleaf.

Installation

Connect in series with the data communication or signal line either near where it enters or leaves the building or close to the equipment being protected (e.g. within its control panel). Either way, it must be very close to the system's earth star point. Install SPDs either within an existing cabinet/cubicle or in a separate enclosure.

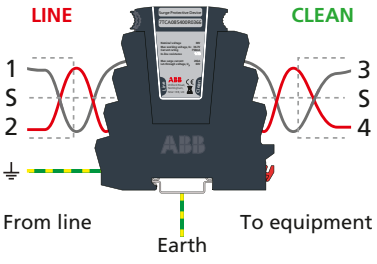

NOTE: The OVR SL 'Slim Line' Series is also available for protection of 3-wire, RS 485 and RTD applications (OVR SL/3W, OVR SL RS485 & OVR SL RTD). The OVR SL X Series has approvals for use in hazardous areas. For telecommunication applications use OVR SLTN Series.

Protection and safety

Data & signal protection

OVR SL Series

OVR SL Series - Technical specification

Electrical specification		OVR SL06	OVR SL15	OVR SL30	OVR SL50	OVR SL110
ABB order code		7TCA085400R0360	7TCA085400R0361	7TCA085400R0363	7TCA085400R0364	7TCA085400R0362
Nominal voltage [1]		6 V	15 V	30 V	50 V	110 V
Maximum working voltage Uc (RMS/DC) [2]		5 V/7.79 V	11 V/16.7 V	25 V/36.7 V	40 V/56.7 V	93 V/132 V
Current rating (signal)		750 mA				
In-line resistance (per line ±10%)		1.0 Ω				
Bandwidth (-3 dB 50 Ω system)		45 MHz	45 MHz	45 MHz	45 MHz	45 MHz
Transient specification		**OVR SL06**	**OVR SL15**	**OVR SL30**	**OVR SL50**	**OVR SL110**
Let-through voltage (all conductors) [3] Up						
C2 test 4 kV 1.2/50 µs, 2 kA 8/20 µs to BS EN/EN/IEC 61643-21		36.0 V	38.4 V	63.0 V	90.3 V	185 V
C1 test 1 kV, 1.2/50 µs, 0.5 kA 8/20 µs to BS EN/EN/IEC 61643-21		26.2 V	29.4 V	51.3 V	77.2 V	175 V
B2 test 4 kV 10/700 µs to BS EN/EN/IEC 61643-21		16.0 V	26.8 V	45.4 V	68.3 V	165 V
5 kV, 10/700 µs [4]		17.0 V	27.5 V	46.3 V	69.1 V	170 V
Maximum surge current						
D1 test 10/350 µs to BS EN/EN/IEC 61643-21	– Per signal wire	1.25 kA				
	– Per pair	2.5 kA				
8/20 µs to ITU-T K.45:2003, IEEE C62.41.2:2002	– Per signal wire	10 kA				
	– Per pair	20 kA				
Mechanical specification		**OVR SL06**	**OVR SL15**	**OVR SL30**	**OVR SL50**	**OVR SL110**
Temperature range		-40 to +80 °C				
Connection type		Screw terminal - maximum torque 0.8 Nm				
Conductor size (stranded)		4 mm²				
Earth connection		Via DIN rail or 4 mm² earth terminal - maximum torque 0.8 Nm				
Case material		FR Polymer UL-94 V-0				
Weight	– Unit	0.08 kg				
	– Packaged (per 10)	0.85 kg				
Dimensions		See diagram below				

[1] Nominal voltage (RMS/DC or AC peak) measured at < 10 µA (OVR SL15, OVR SL30, OVR SL50, OVR SL110 and LED variants) and < 200 µA (OVR SL06 and OVR SL06L)
[2] Maximum working voltage (RMS/DC or AC peak) measured at < 1 mA leakage
[3] The maximum transient voltage let-through of the protector throughout the test (±10%), line to line & line to earth, both polarities. Response time < 10 ns
[4] Test to IEC 61000-4-5:2006, ITU-T (formerly CCITT) K.20, K.21 and K.45, Telcordia GR-1089-CORE, Issue 2:2002, ANSI TIA/EIA/IS-968-A:2002 (formerly FCC Part 68)

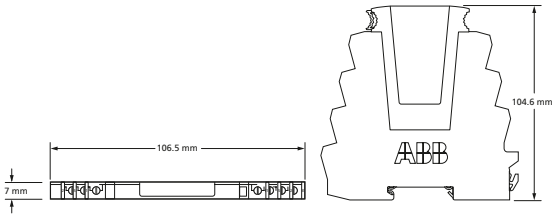

ABB order codes

Part	ABB order code	Part	ABB order code	Part	ABB order code	Part	ABB order code
OVR SL06	7TCA085400R0360	**OVR SL15/M**	7TCA085400R0376	**OVR SL50(UL)**	7TCA085400R0539	**OVR SL180L**	7TCA085400R0425
OVR SL06/I	7TCA085400R0365	**OVR SL15L/M**	7TCA085400R0411	**OVR SL50/I(UL)**	7TCA085400R0540	**OVR SL180**	7TCA085400R0424
OVR SL06L	7TCA085400R0366	**OVR SL15/M(UL)**	7TCA085400R0597	**OVR SL50L(UL)**	7TCA085400R0541	**OVR SL180L/I**	7TCA085400R0423
OVR SL06L/I	7TCA085400R0390	**OVR SL15L/M(UL)**	7TCA085400R0598	**OVR SL50L/I(UL)**	7TCA085400R0542	**OVR SL180/I**	7TCA085400R0426
OVR SL06(UL)	7TCA085400R0527	**OVR SL30**	7TCA085400R0363	**OVR SL50/M**	7TCA085400R0378	**OVR SL180(UL)**	7TCA085400R0547
OVR SL06/I(UL)	7TCA085400R0528	**OVR SL30/I**	7TCA085400R0383	**OVR SL50L/M**	7TCA085400R0401	**OVR SL180/I(UL)**	7TCA085400R0548
OVR SL06L(UL)	7TCA085400R0529	**OVR SL30L**	7TCA085400R0368	**OVR SL50/M(UL)**	7TCA085400R0603	**OVR SL180L(UL)**	7TCA085400R0549
OVR SL06L/I(UL)	7TCA085400R0530	**OVR SL30L/I**	7TCA085400R0393	**OVR SL50L/M(UL)**	7TCA085400R0604	**OVR SL180L/I(UL)**	7TCA085400R0550
OVR SL06/M	7TCA085400R0375	**OVR SL30(UL)**	7TCA085400R0535	**OVR SL110**	7TCA085400R0362	**OVR SL180/M**	7TCA085400R0429
OVR SL06L/M	7TCA085400R0399	**OVR SL30/I(UL)**	7TCA085400R0536	**OVR SL110/I**	7TCA085400R0385	**OVR SL180L/M**	7TCA085400R0430
OVR SL06/M(UL)	7TCA085400R0595	**OVR SL30L(UL)**	7TCA085400R0537	**OVR SL110L**	7TCA085400R0370	**OVR SL180/M(UL)**	7TCA085400R0607
OVR SL06L/M(UL)	7TCA085400R0596	**OVR SL30L/I(UL)**	7TCA085400R0538	**OVR SL110L/I**	7TCA085400R0395	**OVR SL180L/M(UL)**	7TCA085400R0608
OVR SL15	7TCA085400R0361	**OVR SL30/M**	7TCA085400R0377	**OVR SL110(UL)**	7TCA085400R0543	**OVR SL/B**	7TCA085400R0320
OVR SL15/I	7TCA085400R0382	**OVR SL30L/M**	7TCA085400R0400	**OVR SL110/I(UL)**	7TCA085400R0544	**OVR SL/I/B**	7TCA085400R0321
OVR SL15L	7TCA085400R0367	**OVR SL30/M(UL)**	7TCA085400R0601	**OVR SL110L(UL)**	7TCA085400R0545	**OVR SLTN**	7TCA085400R0323
OVR SL15L/I	7TCA085400R0391	**OVR SL30L/M(UL)**	7TCA085400R0602	**OVR SL110L/I(UL)**	7TCA085400R0546	**OVR SLTNL**	7TCA085400R0418
OVR SL15(UL)	7TCA085400R0531	**OVR SL50**	7TCA085400R0364	**OVR SL110/M**	7TCA085400R0379	**OVR WBX SLQ**	7TCA085400R0326
OVR SL15/I(UL)	7TCA085400R0532	**OVR SL50/I**	7TCA085400R0384	**OVR SL110L/M**	7TCA085400R0402	**OVR WBX SLQ/G**	7TCA085400R0327
OVR SL15L(UL)	7TCA085400R0533	**OVR SL50L**	7TCA085400R0369	**OVR SL110/M(UL)**	7TCA085400R0605		
OVR SL15L/I(UL)	7TCA085400R0534	**OVR SL50L/I**	7TCA085400R0394	**OVR SL110L/M(UL)**	7TCA085400R0606		

ABB Limited
Wilford Road - Nottingham
NG2 1EB UK
Tel: +44 (0) 115 964 3700

We reserve the right to make technical changes or modify the contents of this document without prior notice. With regard to purchase orders, the agreed particulars shall prevail. ABB AG does not accept any responsibility whatsoever for potential errors or possible lack of information in this document. We reserve all rights in this document and in the subject matter and illustrations contained therein. Any reproduction, disclosure to third parties or utilisation of its contents – in whole or in parts – is forbidden without prior written consent of ABB AG. Copyright© 2020 ABB All rights reserved

Protection and safety

Data & signal protection

OVR SL X Series



LPZ 0→3 | FULL MODE Bonding + Equipment Protection | LED OPTIONAL INDICATION | SIGNAL/ TELECOM TEST CAT D + C + B | ENHANCED Low let-through voltage | REPLACEABLE PROTECTION MODULE | LOW IN-LINE RESISTANCE 1 Ω

CURRENT RATING 750 mA | ATEX/IEC APPROVED | HIGH BANDWIDTH | ULTRA SLIM 7 mm WIDTH | SIL 3 IEC 61508

Combined Category D, C, B tested protector (to BS EN 61643) suitable for twisted pair signalling applications within hazardous environments (ATEX/ IECEx approved). Available for working voltages of up to 15 and 30 Volts. For use at boundaries up to LPZ 0 to protect against flashover through to LPZ 3 to protect sensitive electronic equipment.

Features & benefits

- Approved for use in hazardous environments for the protection of Intrinsically Safe circuits (Classification: II 2(1)G, Ex ia (ia Ga) IIC T4 Gb)
- Very low let-through voltage (enhanced protection to IEC/ BS EN 62305) between all lines - Full Mode protection
- Full Mode design capable of handling partial lightning currents as well as allowing continual operation of protected equipment
- Repeated protection in lightning intense environments
- Ultra slim 7 mm width ideal for compact protection of large numbers of lines (e.g. process control installations)
- Optional LED status indication versions available for low current DC power applications
- Negligible self-capacitance and self-inductance offering minimal interference when protecting Intrinsically Safe circuits
- Very low (1 Ω) in-line resistance allows resistance critical applications (e.g. alarm loops) to be protected
- High (750 mA) maximum running current
- High bandwidth enables higher frequency (high traffic or bit rate) data communications
- Screen terminal enables easy connection of cable screen to earth
- Suitable for earthed or isolated screen systems - add /I suffix to part number for versions that require isolated screens
- Built-in innovative DIN rail foot with locking feature for simple positioning and clip-on mounting to top hat DIN rails
- 4 mm2 terminals allow for larger cross section wiring, stranded wires terminated with ferrules or fitting two wires into a single terminal
- Evaluated for SIL to IEC 61508
- Approval references for OVR SL X Series: IECEx SIR 10.0030X, Sira 10ATEX2063X
- The certificate numbers have an 'X' suffix, which indicates that the certificates contain the following 'Specific conditions of use': The equipment is not capable of passing a 500 V r.m.s. a.c. electric strength test in accordance with Clause 6.3.12 of EN 60069-11:2007 between its intrinsically safe circuits and its DIN rail clip (which is intended to be earthed). This shall be taken into account when this equipment is being installed.
- The equipment enclosure shall only be cleaned using a damp cloth

Application

Use these protectors in hazardous environments where installation space is at a premium and large numbers of lines require protection (e.g. process control, 4-20 mA loops, fire and gas detectors and shut-down systems). Suitable for high speed digital communication equipment or systems with long signal lines. See Application Note OVR AN013.

Installation

Connect in series with the data communication or signal line either near where it enters or leaves the building or close to the equipment being protected (e.g. within its control panel). Either way, it must be very close to the system's earth star point. Install protectors either within an existing cabinet/cubicle or in a separate enclosure.

Accessories

Replacement modules:
OVR SL15X/M, OVR SL30X/M
Standard module replacement for 15 and 30 V protectors respectively
OVR SL15XL/M, OVR SL30XL/M
LED module replacement for 15 and 30 V protectors respectively
OVR SLX/B Base replacement (common for standard and LED modules)

OVR SLX/I/B
Base replacement with isolated screen from earth

Weatherproof enclosure:
OVR WBX SLQ

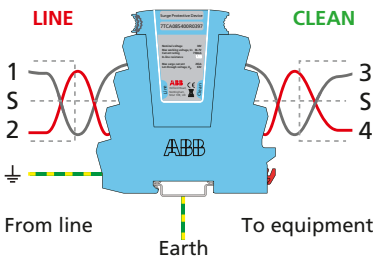

NOTE: Use the standard OVR SL 'Slim Line' Series for non-hazardous areas. The OVR SL Series is also available for protection of 3-wire, RS 485, RTD & telecommunication applications (OVR SL/3W, OVR SL RS485, OVR SL RTD & OVR SL TN).

Protection and safety

Data & signal protection

OVR SL X Series

OVR SL X Series - Technical specification

Electrical specification	OVR SL15X	OVR SL30X
ABB order code	7TCA085400R0386	7TCA085400R0387
Nominal voltage[1]	15 V	30 V
Maximum working voltage U_c (DC)[2]	16.7 V	36.7 V
Maximum working voltage U_c (AC RMS)	11 V	25 V
Current rating (signal)	750 mA	
In-line resistance (per line ±10%)	1.0 Ω	
Bandwidth (-3 dB 50 Ω system)	45 MHz	
Intrinsically safe specification	**OVR SL15X**	**OVR SL30X**
Maximum voltage *Ui*	30 V	
Maximum power *Pi*: – Per -40 °C < Ta < 40 °C – Per -40 °C < Ta < 60 °C – Per -40 °C < Ta < 80 °C	1.3 W 1.2 W 1.0 W	
Capacitance *Ci*	0 µF	
Inductance *Li*	0 µH	
Certificate number	IECEx SIR 10.0030X, Sira 10ATEX2063X	
Classification	Ex II 2 (1) G, Ex ia (ia Ga) IIC T4 Gb	
Transient specification	**OVR SL15X**	**OVR SL30X**
Let-through voltage (all conductors)[3] *Up*		
C2 test 4 kV 1.2/50 µs, 2 kA 8/20 µs to BS EN/EN/IEC 61643-21	38.4 V	63.0 V
C1 test 1 kV, 1.2/50 µs, 0.5 kA 8/20 µs to BS EN/EN/IEC 61643-21	29.4 V	51.3 V
B2 test 4 kV 10/700 µs to BS EN/EN/IEC 61643-21	26.8 V	45.4 V
5 kV, 10/700 µs[4]	27.5 V	46.3 V
Maximum surge current		
D1 test 10/350 µs to BS EN/EN/IEC 61643-21: – Per signal wire – Per pair	1.25 kA 2.5 kA	
8/20 µs to ITU-T K.45:2003, IEEE C62.41.2:2002: – Per signal wire – Per pair	5 kA 10 kA	
Mechanical specification	**OVR SL15X**	**OVR SL30X**
Temperature range	-40 to +80 °C	
Connection type	Screw terminal - maximum torque 0.8 Nm	
Conductor size (stranded)	4 mm2	
Earth connection	Via DIN rail or 4 mm2 earth terminal - maximum torque 0.8 Nm	
Case material	FR Polymer UL-94 V-0	
Weight: – Unit	0.08 kg	
SIL (Safety Integrity Level) to IEC 61508	SIL 3[5]	
Dimensions	See diagram below	

[1] Nominal voltage (RMS/DC or AC peak) measured at < 10 µA
[2] Maximum working voltage (RMS/DC or AC peak) measured at < 1 mA leakage
[3] The maximum transient voltage let-through of the protector throughout the test (±10%), line to line & line to earth, both polarities. Response time < 10 ns
[4] Test to IEC 61000-4-5:2006, ITU-T (formerly CCITT) K.20, K.21 and K.45, Telcordia GR-1089-CORE, Issue 2:2002, ANSI TIA/EIA/IS-968-A:2002 (formerly FCC Part 68)

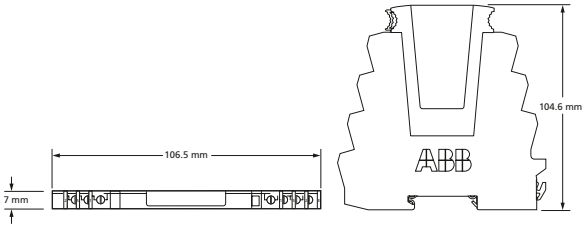

ABB order codes

Part	ABB order code	Part	ABB order code
OVR SL15X	7TCA085400R0386	**OVR SL30X**	7TCA085400R0387
OVR SL15X/I	7TCA085400R0388	**OVR SL30X/I**	7TCA085400R0392
OVR SL15XL	7TCA085400R0396	**OVR SL30XL**	7TCA085400R0397
OVR SL15XL/I	7TCA085400R0389	**OVR SL30XL/I**	7TCA085400R0398
OVR SL15X/M	7TCA085400R0380	**OVR SL30X/M**	7TCA085400R0381
OVR SL15XL/M	7TCA085400R0404	**OVR SL30XL/M**	7TCA085400R0403
OVR SLX/B	7TCA085400R0325	**OVR WBX SLQ**	7TCA085400R0326
OVR SLX/I/B	7TCA085400R0374	**OVR WBX SLQ/G**	7TCA085400R0327

Protection and safety

Data & signal protection

OVR D Series



LPZ 0→3 | FULL MODE Bonding + Equipment Protection | SIGNAL TEST CAT D + C + B | ENHANCED Low let-through voltage | LOW IN-LINE RESISTANCE 9.4 Ω | CURRENT RATING 300 mA | GND

Combined Category D, C, B tested protector (to BS EN 61643) suitable for most twisted pair signalling applications. Available for working voltages of up to 6, 15, 30, 50 and 110 Volts. For use at boundaries up to LPZ 0 to protect against flashover (typically the service entrance location) through to LPZ 3 to protect sensitive electronic equipment.

Features & benefits

- Very low let-through voltage (enhanced protection to IEC/BS EN 62305) between all lines - Full Mode protection
- Full Mode design capable of handling partial lightning currents as well as allowing continual operation of protected equipment
- Repeated protection in lightning intense environments
- Low in-line resistance minimizes unnecessary reductions in signal strength
- Strong, flame retardant, ABS housing
- Supplied ready for flat mounting on base or side
- Built-in DIN rail foot for simple clip-on mounting to top hat DIN rails
- Colour coded terminals give a quick and easy installation check - grey for the dirty (line) end and green for the clean end
- Screen terminal enables easy connection of cable screen to earth
- Substantial earth stud to enable effective earthing
- Integral earthing plate for enhanced connection to earth via a OVR CME kit

Application

Use on twisted pair lines, e.g. those found in process control equipment, modems and computer communications interfaces.

Installation

Connect in series with the data communication or signal line either near where it enters or leaves the building or close to the equipment being protected (e.g. within its control panel). Either way, it must be very close to the system's earth star point. Install protectors either within an existing cabinet/cubicle or in a separate enclosure.

Accessories

Combined Mounting/Earthing kits:

OVR CME 4 Mount & earth up to 4 protectors
OVR CME 8 Mount & earth up to 8 protectors
OVR CME 16 Mount & earth up to 16 protectors
OVR CME 32 Mount & earth up to 32 protectors

Weatherproof enclosures:

OVR WBX 4, OVR WBX 4/GS For use with a OVR CME 4 and up to 4 protectors

OVR WBX 8, OVR WBX 8/GS
For use with a OVR CME 8 and up to 8 protectors

OVR WBX 16/2/G
For use with one or two OVR CME 16 and up to 32 protectors

Install in series (in-line)

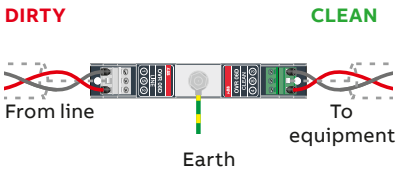

Slim Line (OVR SL) and ATEX (OVR SLX) versions are also available. If your system requires a protector with a very low resistance or higher current, see the OVR E & H Series. Also use the OVR E Series for systems needing a higher bandwidth. Protectors for 3-wire (OVR SL/3W) and RTD (OVR RTD, OVR SL RTD) are available, as are the space saving protectors (OVR Q, OVR SL Series). The OVR KT and TN Series are additional protectors specifically for telephone lines.

Protection and safety

Data & signal protection

OVR D Series

OVR D Series - Technical specification

Electrical specification		OVR 06D	OVR 15D	OVR 30D	OVR 50D	OVR 110D
ABB order code		7TCA085400R0288	7TCA085400R0349	7TCA085400R0351	7TCA085400R0352	7TCA085400R0347
Nominal voltage[1]		6 V	15 V	30 V	50 V	110 V
Maximum working voltage *Uc* (RMS/DC)[2]		5 V / 7.79 V	13 V / 19 V	26 V / 37.1 V	41 V / 58 V	93 V / 132 V
Current rating (signal)		300 mA				
In-line resistance (per line ±10%)		9.4 Ω	9.4 Ω	9.4 Ω	9.4 Ω	9.4 Ω
Bandwidth (-3 dB 50 Ω system)		800 kHz	2.5 MHz	4 MHz	6 MHz	9 MHz
Transient specification		**OVR 06D**	**OVR 15D**	**OVR 30D**	**OVR 50D**	**OVR 110D**
Let-through voltage (all conductors)[3] *Up*						
C2 test 4 kV 1.2/50 µs, 2 kA 8/20 µs to BS EN/EN/IEC 61643-21		12.0 V	25.0 V	44.0 V	78.0 V	155 V
C1 test 1 kV, 1.2/50 µs, 0.5 kA 8/20 µs to BS EN/EN/IEC 61643-21		11.5 V	24.5 V	43.5 V	76.0 V	150 V
B2 test 4 kV 10/700 µs to BS EN/EN/IEC 61643-21		10.0 V	23.0 V	42.5 V	73.0 V	145 V
5 kV, 10/700 µs[4]		10.5 V	23.8 V	43.4 V	74.9 V	150 V
Maximum surge current						
D1 test 10/350 µs to BS EN/EN/IEC 61643-21:	– Per signal wire	2.5 kA				
	– Per pair	5 kA				
8/20 µs to ITU-T K.45:2003, IEEE C62.41.2:2002:	– Per signal wire	10 kA				
	– Per pair	20 kA				
Mechanical specification		**OVR 06D**	**OVR 15D**	**OVR 30D**	**OVR 50D**	**OVR 110D**
Temperature range		-40 to +80 °C				
Connection type		Screw terminal - maximum torque 0.5 Nm				
Conductor size (stranded)		2.5 mm²				
Earth connection		M6 stud				
Case material		FR Polymer UL-94 V-0				
Weight		0.08 kg				
Dimensions		See diagram below				

[1] Nominal voltage (RMS/DC or AC peak) measured at < 5 µA (OVR 15D, OVR 30D, OVR 50D, OVR 110D) and < 200 µA (OVR 06D)
[2] Maximum working voltage (RMS/DC or AC peak) measured at < 1 mA leakage (OVR 15D, OVR 30D, OVR 50D, OVR 110D), < 10 mA (OVR 06D)
[3] The maximum transient voltage let-through of the protector throughout the test (±10%), line to line & line to earth, both polarities. Response time < 10 ns
[4] Test to IEC 61000-4-5:2006, ITU-T (formerly CCITT) K.20, K.21 and K.45, Telcordia GR-1089-CORE, Issue 2:2002, ANSI TIA/EIA/IS-968-A:2002 (formerly FCC Part 68)

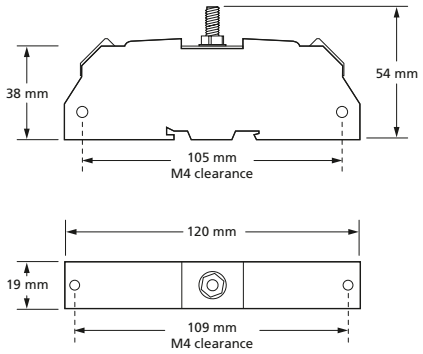

ABB order codes

Part	ABB order code	Part	ABB order code	Part	ABB order code
OVR CME4	7TCA085400R0414	**OVR WBX4**	7TCA085410R0048	**OVR WBX4/GS**	7TCA085410R0049
OVR CME8	7TCA085400R0415	**OVR WBX8**	7TCA085410R0050	**OVR WBX8/GS**	7TCA085410R0051
OVR CME16	7TCA085410R0415	**OVR CME32**	7TCA085410R0046	**OVR WBX16/2/G**	7TCA085410R0047

Protection and safety

Data & signal protection

OVR E Series



LPZ 0→3 | FULL MODE Bonding + Equipment Protection | HIGH BANDWIDTH | SIGNAL/ TELECOM TEST CAT D + C + B | ENHANCED Low let-through voltage | LOW IN-LINE RESISTANCE 1 Ω | CURRENT RATING 1.25 A | GND

Combined Category D, C, B tested protector (to BS EN 61643) suitable for twisted pair signalling applications which require either a lower in-line resistance, an increased current or a higher bandwidth than the OVR D Series. Also suitable for DC power applications less than 1.25 Amps. Available for working voltages of up to 6, 15, 30, 50 and 110 Volts. For use at boundaries up to LPZ 0 to protect against flashover (typically the service entrance location) through to LPZ 3 to protect sensitive electronic equipment.

Features & benefits

- Very low let-through voltage (enhanced protection to IEC/BS EN 62305) between all lines - Full Mode protection
- Full Mode design capable of handling partial lightning currents as well as allowing continual operation of protected equipment
- Repeated protection in lightning intense environments
- Very low (1 Ω) in-line resistance allows resistance critical applications (e.g. alarm loops) to be protected
- High (1.25 A) maximum running current
- High bandwidth enables higher frequency (high traffic or bit rate) data communications
- Screen terminal enables easy connection of cable screen to earth
- Strong, flame retardant, ABS housing
- Built-in DIN rail foot for simple clip-on mounting to top hat DIN rails
- Colour coded terminals give a quick and easy installation check - grey for the dirty (line) end and green for clean
- Substantial earth stud to enable effective earthing
- Supplied ready for flat mounting on base or side
- Integral earthing plate for enhanced connection to earth via OVR CME kit

Application

Use these units to protect resistance sensitive, higher frequency or running current systems, e.g. high speed digital communications equipment or systems with long signal lines.

Installation

Connect in series with the data communication or signal line either near where it enters or leaves the building or close to the equipment being protected (e.g. within its control panel). Either way, it must be very close to the system's earth star point. Install protectors either within an existing cabinet/cubicle or in a separate enclosure.

Accessories

Combined Mounting/Earthing kits:

OVR CME 4 Mount & earth up to 4 protectors
OVR CME 8 Mount & earth up to 8 protectors
OVR CME 16 Mount & earth up to 16 protectors
OVR CME 32 Mount & earth up to 32 protectors

Weatherproof enclosures:

OVR WBX 4, OVR WBX 4/GS
For use with a OVR CME 4 and up to 4 protectors
OVR WBX 8, OVR WBX 8/GS
For use with a OVR CME 8 and up to 8 protectors
OVR WBX 16/2/G
For use with one or two OVR CME 16 and up to 32 protectors

Install in series (in-line)

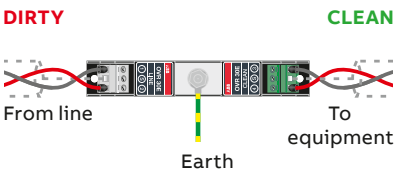

NOTE: Slim Line (OVR SL) and ATEX (OVR SLX) are available. For many twisted pair data and signal applications, the lower cost OVR D Series may be suitable. For applications requiring higher current (1.25 A to 4 A) or ultra-low in-line resistance, the OVR H Series protectors may be more suitable.

Protection and safety

Data & signal protection

OVR E Series

OVR E Series - Technical specification

Electrical specification	OVR 06E	OVR 15E	OVR 30E	OVR 50E	OVR 110E
ABB order code	7TCA085400R0346	7TCA085400R0350	7TCA085400R0353	7TCA085400R0354	7TCA085400R0348
Nominal voltage[1]	6 V	15 V	30 V	50 V	110 V
Maximum working voltage *Uc* (RMS/DC)[2]	5 V / 7.79 V	11 V / 16.7 V	25 V / 36.7 V	40 V / 56.7 V	93 V / 132 V
Current rating (signal)	1.25 A				
In-line resistance (per line ±10%)	1.0 Ω				
Bandwidth (-3 dB 50 Ω system)	45 MHz				
Transient specification	**OVR 06E**	**OVR 15E**	**OVR 30E**	**OVR 50E**	**OVR 110E**
Let-through voltage (all conductors)[3] *Up*					
C2 test 4 kV 1.2/50 µs, 2 kA 8/20 µs to BS EN/EN/IEC 61643-21	36.0 V	39.0 V	60.0 V	86.0 V	180 V
C1 test 1 kV, 1.2/50 µs, 0.5 kA 8/20 µs to BS EN/EN/IEC 61643-21	26.2 V	28.0 V	49.0 V	73.5 V	170 V
B2 test 4 kV 10/700 µs to BS EN/EN/IEC 61643-21	16.0 V	25.5 V	43.5 V	65.0 V	160 V
5 kV, 10/700 µs[4]	17.0 V	26.2 V	44.3 V	65.8 V	165 V
Maximum surge current					
D1 test 10/350 µs to BS EN/EN/IEC 61643-21: – Per signal wire – Per pair	2.5 kA 5 kA				
8/20 µs to ITU-T K.45:2003, IEEE C62.41.2:2002: – Per signal wire – Per pair	10 kA 20 kA				
Mechanical specification	**OVR 06E**	**OVR 15E**	**OVR 30E**	**OVR 50E**	**OVR 110E**
Temperature range	-40 to +80 °C				
Connection type	Screw terminal - maximum torque 0.5 Nm				
Conductor size (stranded)	2.5 mm²				
Earth connection	M6 stud				
Case material	FR Polymer UL-94 V-0				
Weight	0.08 kg				
Dimensions	See diagram below				

[1] Nominal voltage (RMS/DC or AC peak) measured at < 10 µA (OVR 15E, OVR 30E, OVR 50E, OVR 110E) and < 200 µA (OVR 06E)
[2] Maximum working voltage (RMS/DC or AC peak) measured at < 5 mA leakage (OVR 15E, OVR 30E, OVR 50E, OVR 110E) and < 10 mA (OVR 06E)
[3] The maximum transient voltage let-through of the protector throughout the test (±10%), line to line & line to earth, both polarities. Response time < 10 ns
[4] Test to IEC 61000-4-5:2006, ITU-T (formerly CCITT) K.20, K.21 and K.45,Telcordia GR-1089-CORE, Issue 2:2002, ANSI TIA/EIA/IS-968-A:2002 (formerly FCC Part 68)

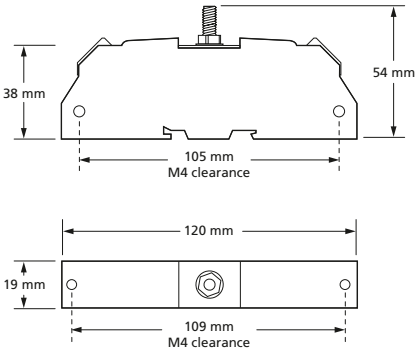

ABB order codes

Part	ABB order code	Part	ABB order code	Part	ABB order code
OVR CME4	7TCA085400R0414	**OVR WBX4**	7TCA085410R0048	**OVR WBX4/GS**	7TCA085410R0049
OVR CME8	7TCA085400R0415	**OVR WBX8**	7TCA085410R0050	**OVR WBX8/GS**	7TCA085410R0051
OVR CME16	7TCA085410R0415	**OVR CME32**	7TCA085410R0046	**OVR WBX16/2/G**	7TCA085410R0047

Protection and safety

Data & signal protection

OVR H Series



LPZ 0→3 | FULL MODE Bonding + Equipment Protection | SIGNAL/ TELECOM TEST CAT D + C + B | ENHANCED Low let-through voltage | LOW IN-LINE RESISTANCE 0.05 Ω | CURRENT RATING 4 A

Combined Category D, C, B tested protector (to BS EN 61643) suitable for twisted pair signalling applications which require either a lower in-line resistance or an increased current than the OVR D or E Series. Also suitable for DC power applications less than 4 Amps. Available for working voltages of up to 6, 15, 30, 50, 110 and 180 Volts. For use at boundaries up to LPZ 0 to protect against flashover (typically the service entrance location) through to LPZ 3 to protect sensitive electronic equipment.

Features & benefits

- Very low let-through voltage (enhanced protection to IEC/BS EN 62305) between all lines - Full Mode protection
- Full Mode design capable of handling partial lightning currents as well as allowing continual operation of protected equipment
- Repeated protection in lightning intense environments
- Ultra-low (< 0.05 Ω) in-line resistance allows resistance critical applications (e.g. alarm loops) to be protected
- Very high (4 A) maximum running current
- Strong, flame retardant ABS housing
- Supplied ready for flat mounting on base or side
- Built-in DIN rail foot for simple clip-on mounting to top hat DIN rails
- Colour coded terminals give a quick and easy installation check - grey for the dirty (line) end and green for clean
- Screen terminal enables easy connection of cable screen to earth
- Substantial earth stud to enable effective earthing
- Integral earth plate enables enhanced connection to earth via OVR CME kit

Application

Use these applications to protect resistance sensitive or higher running current systems, e.g. systems with long signal lines, or DC power applications.

Installation

Connect in series with the data communication or signal line either near where it enters or leaves the building or close to the equipment being protected (e.g. within its control panel). Either way, it must be very close to the system's earth star point. Install protectors either within an existing cabinet/cubicle or in a separate enclosure.

Accessories

Combined Mounting/Earthing kits:
OVR CME 4 Mount & earth up to 4 protectors
OVR CME 8 Mount & earth up to 8 protectors
OVR CME 16 Mount & earth up to 16 protectors
OVR CME 32 Mount & earth up to 32 protectors

Weatherproof enclosures:
OVR WBX 4, OVR WBX 4/GS
For use with a OVR CME 4 and up to 4 protectors
OVR WBX 8, OVR WBX 8/GS
For use with a OVR CME 8 and up to 8 protectors
OVR WBX 16/2/G
For use with one or two OVR CME 16 and up to 32 protectors

Install in series (in-line)

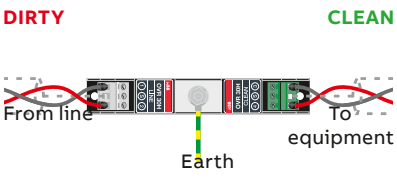

NOTE: For some data and signal applications with lower current, higher in-line resistance or higher bandwidth requirements, the OVR D or E Series protectors or the Slim Line OVR SL Series may be more suitable.

Protection and safety

Data & signal protection

OVR H Series

OVR E Series - Technical specification

	ESP 06H	ESP 15H	ESP 30H	ESP 50H	ESP 110H	ESP 180H
ABB order code	7TCA085400R0003	7TCA085400R0009	7TCA085400R0011	7TCA085400R0012	7TCA085400R0008	7TCA085400R0492
Nominal voltage[1]	6 V	15 V	30 V	50 V	110 V	180 V
Maximum working voltage U_c (DC)[2]	7.79 V	16.7 V	36.7 V	56.7 V	132 V	190 V
Maximum working voltage U_c (AC RMS)	5 V	11 V	25 V	40 V	93 V	130 V
Current rating (signal)	4 A					
In-line resistance (per line ±10%)	0.05 Ω					
Bandwidth (-3 dB 50 Ω system)	160 KHz	140 KHz	130 KHz	120 KHz	120 KHz	100 KHz
Transient specification	**ESP 06H**	**ESP 15H**	**ESP 30H**	**ESP 50H**	**ESP 110H**	**ESP 180H**
Let-through voltage (all conductors)[3] *Up*						
C2 test 4 kV 1.2/50 µs, 2 kA 8/20 µs to BS EN/EN/IEC 61643-21	12.0 V	27.5 V	46.0 V	67.0 V	150 V	215 V
C1 test 1 kV, 1.2/50 µs, 0.5 kA 8/20 µs to BS EN/EN/IEC 61643-21	11.0 V	26.5 V	45.0 V	66.5 V	145 V	205 V
B2 test 4 kV 10/700 µs to BS EN/EN/ IEC 61643-21	10.5 V	25.5 V	43.5 V	65.0 V	140 V	203 V
5 kV, 10/700 µs(4)	10.8 V	26.2 V	44.3 V	65.8 V	145 V	200 V
Maximum surge current						
D1 test 10/350 µs to signal wire – Per	2.5 kA					
BS EN/EN/IEC 61643-21: – Per pair	5 kA					
8/20 µs to ITU-T K.45:2003, signal wire – Per	10 kA					
IEEE C62.41.2:2002: – Per pair	20 kA					
Mechanical specification	**ESP 06H**	**ESP 15H**	**ESP 30H**	**ESP 50H**	**ESP 11H**	**ESP 180H**
Temperature range						-40 to +80 °C
Connection type						Screw terminal - maximum torque 0.5 Nm
Conductor size (stranded)						2.5 mm²
Earth connection						M6 stud - maximum torque 0.5 Nm
Case material						FR Polymer UL-94 V-0
Weight: – Unit						0.08 kg
Dimensions						See diagram below

[1] Nominal voltage (RMS/DC or AC peak) measured at < 10 µA (OVR 15H, OVR 30H, OVR 50H, OVR 110H) and < 200 µA (OVR 06H)
[2] Maximum working voltage (RMS/DC or AC peak) measured at < 5 mA leakage (OVR 15H, OVR 30H, OVR 50H, OVR 110H) and < 10 mA (OVR 06H)
[3] The maximum transient voltage let-through of the protector throughout the test (±10%), line to line & line to earth, both polarities. Response time < 10 ns
[4] Test to IEC 61000-4-5:2006, ITU-T (formerly CCITT) K.20, K.21 and K.45,Telcordia GR-1089-CORE, Issue 2:2002, ANSI TIA/EIA/IS-968-A:2002 (formerly FCC Part 68)

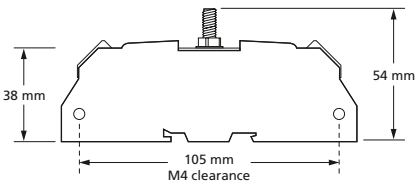

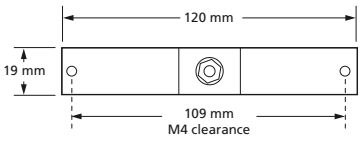

Part	ABB order code
CME4	7TCA085400R0001
CME32	7TCA085410R0003
WBX 3/G	7TCA085410R0024
WBX 8	7TCA085410R0030
CME8	7TCA085400R0002
WBX 2/G	7TCA085410R0022
WBX 4	7TCA085410R0027
WBX 8/GS	7TCA085410R0031
CME16	7TCA085410R0002
WBX 3	7TCA085410R0023
WBX 4/GS	7TCA085410R0028
WBX 16/2/G	7TCA085410R0020

Protection and safety

Data & signal protection

OVR SL 3-Wire Series



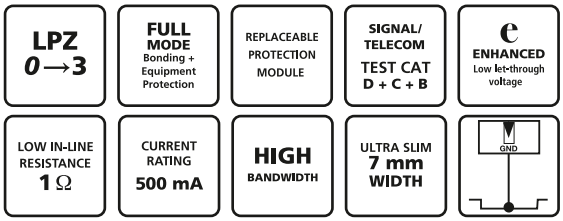

Combined Category D, C, B tested protector (to BS EN 61643) suitable for 3-wire signalling applications which require either a lower in-line resistance, an increased current and/or higher bandwidth. Also suitable for DC power applications less than 0.5 Amps. Available for working voltages of up to 6, 15, 30, 50 and 110 Volts. For use at boundaries up to LPZ 0 to protect against flashover (typically the service entrance location) through to LPZ 3 to protect sensitive electronic equipment.

Features & benefits

- Very low let-through voltage (enhanced protection to IEC/BS EN 62305) between all lines - Full Mode protection
- Full Mode design capable of handling partial lightning currents as well as allowing continual operation of protected equipment
- Repeated protection in lightning intense environments
- Ultra slim 7 mm width ideal for compact protection of large numbers of lines (e.g. process control installations)
- Two stage removable protection module with simple quick release mechanism allowing partial removal for easy line commissioning and maintenance as well as full removal for protection replacement
- Very low (1 Ω) in-line resistance allows resistance critical applications (e.g. alarm loops) to be protected
- High (500 mA) maximum running current
- High bandwidth enables higher frequency (high traffic or bit rate) data communications
- Strong, flame retardant, polycarbonate housing
- Built-in innovative DIN rail foot with locking feature for simple positioning and clip-on mounting to top hat DIN rails
- 4 mm² terminals allow for larger cross section wiring, stranded wires terminated with ferrules or fitting two wires into a single terminal
- Convenient earthing through DIN foot and/or earth terminal

Application

Use these protectors for 3-wire systems where installation space is at a premium and large numbers of lines require protection (e.g. process control, high speed digital communication equipment or systems with long signal lines).

Installation

Connect in series with the data communication or signal line either near where it enters or leaves the building or close to the equipment being protected (e.g. within its control panel). Either way, it must be very close to the system's earth star point. Install protectors either within an existing cabinet/cubicle or in a separate enclosure.

Accessories

CReplacement modules:
OVR SLXX/3W/M
Standard module replacement where XX is voltage rating (06, 15, 30, 50 or 110)
OVR SL/3W/B
Base replacement

Weatherproof enclosure:
OVR WBX SLQ

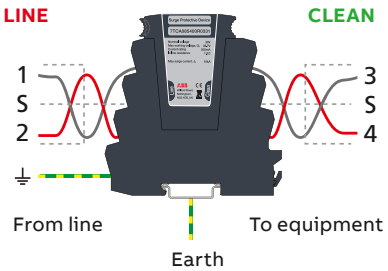

NOTE: The OVR SL 'Slim Line' Series is also available for protection of 2-wire systems up to 110 V, RS 485, RTD and telecommunication applications (OVR SL Series, OVR SL RS485, OVR SL RTD and OVR SL TN). The OVR SL X Series has approvals for use in hazardous areas.

Protection and safety

Data & signal protection

OVR SL 3-Wire Series

OVR SL 3-Wire Series - Technical specification

Electrical specification	OVR SL06/3W	OVR SL15/3W	OVR SL30/3W	OVR SL50/3W	OVR SL110/3W
ABB order code	7TCA085400R0328	7TCA085400R0330	7TCA085400R0331	7TCA085400R0332	7TCA085400R0329
Nominal voltage[1]	6 V	15 V	30 V	50 V	110 V
Maximum working voltage *Uc* (RMS/DC)[2]	5 V / 7.79 V	11 V / 16.7 V	25 V / 36.7 V	40 V / 56.7 V	93 V / 132 V
Current rating (signal)	500 mA				
In-line resistance (per line ±10%)	1.0 Ω				3.3 Ω
Bandwidth (-3 dB 50 Ω system)	45 MHz				
Transient specification	**OVR SL06/3W**	**OVR SL15/3W**	**OVR SL30/3W**	**OVR SL50/3W**	**OVR SL110/3W**
Let-through voltage (all conductors)[3] *Up*					
C2 test 4 kV 1.2/50 µs, 2 kA 8/20 µs to BS EN/EN/IEC 61643-21	36.0 V	38.4 V	63.0 V	90.3 V	185 V
C1 test 1 kV, 1.2/50 µs, 0.5 kA 8/20 µs to BS EN/EN/IEC 61643-21	26.2 V	29.4 V	51.3 V	77.2 V	175 V
B2 test 4 kV 10/700 µs to BS EN/EN/IEC 61643-21	16.0 V	26.8 V	45.4 V	68.3 V	165 V
5 kV, 10/700 µs[4]	17.0 V	27.5 V	46.3 V	69.1 V	170 V
Maximum surge current					
D1 test 10/350 µs to BS EN/EN/IEC 61643-21: – Per signal wire	1.25 kA				
D1 test 10/350 µs to BS EN/EN/IEC 61643-21: – Per pair	2.5 kA				
8/20 µs to ITU-T K.45:2003, IEEE C62.41.2:2002: – Per signal wire	5 kA				
8/20 µs to ITU-T K.45:2003, IEEE C62.41.2:2002: – Per pair	10 kA				
Mechanical specification	**OVR SL06/3W**	**OVR SL15/3W**	**OVR SL30/3W**	**OVR SL50/3W**	**OVR SL110/3W**
Temperature range	-40 to +80 °C				
Connection type	Screw terminal - maximum torque 0.8 Nm				
Conductor size (stranded)	4 mm²				
Earth connection	Via DIN rail or 4 mm² earth terminal - maximum torque 0.8 Nm				
Case material	FR Polymer UL-94 V-0				
Weight: – Unit	0.08 kg				
Dimensions	See diagram below				

[1] Nominal voltage (RMS/DC or AC peak) measured at < 10 µA (OVR SL15/3W, OVR SL30/3W, OVR SL50/3W, OVR SL110/3W) and < 200 µA (OVR SL06/3W)
[2] Maximum working voltage (RMS/DC or AC peak) measured at < 1 mA leakage
[3] The maximum transient voltage let-through of the protector throughout the test (±10%), line to line & line to earth, both polarities. Response time < 10 ns
[4] Test to IEC 61000-4-5:2006, ITU-T (formerly CCITT) K.20, K.21 and K.45, Telcordia GR-1089-CORE, Issue 2:2002, ANSI TIA/EIA/IS-968-A:2002 (formerly FCC Part 68)

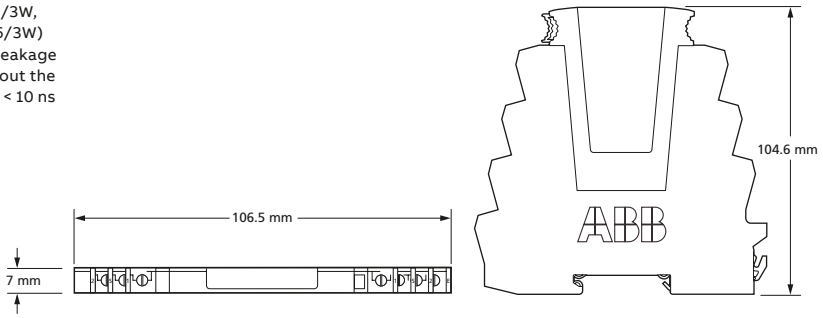

ABB order codes

Part	ABB order code	Part	ABB order code
OVR SL06/3W	7TCA085400R0328	**OVR SL50/3W**	7TCA085400R0332
OVR SL06/3W/M	7TCA085400R0405	**OVR SL50/3W/M**	7TCA085400R0409
OVR SL15/3W	7TCA085400R0330	**OVR WBX SLQ/G**	7TCA085400R0327
OVR SL15/3W/M	7TCA085400R0406	**OVR SL110/3W**	7TCA085400R0329
OVR WBX SLQ	7TCA085400R0326	**OVR SL110/3W/M**	7TCA085400R0408
OVR SL30/3W	7TCA085400R0331	**OVR SL/B**	7TCA085400R0320
OVR SL30/3W/M	7TCA085400R0407	**OVR SL/I/B**	7TCA085400R0321

Protection and safety

Data & signal protection

OVR SL LED 4-20 mA Series



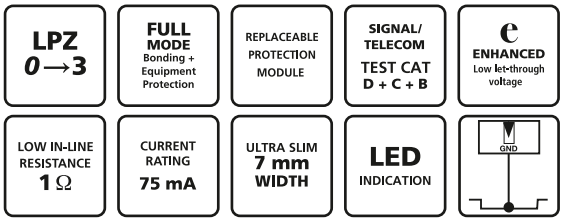

Combined Category D, C, B tested protector (to BS EN 61643) suitable for twisted pair 4-20 mA loop systems with innovative LED protector status indication. For use at boundaries up to LPZ 0 to protect against flashover (typically the service entrance location) through to LPZ 3 to protect sensitive electronic equipment (e.g. transmitters, monitors, controllers).

Features & benefits

- Very low let-through voltage (enhanced protection to IEC/BS EN 62305) between all lines - Full Mode protection
- Full Mode design capable of handling partial lightning currents as well as allowing continual operation of protected equipment
- Repeated protection in lightning intense environments
- Innovative LED indication of protection status provides easy visual checking and quick maintenance
- Ultra slim 7 mm width ideal for compact protection of large numbers of lines (e.g. process control installations)
- Two stage removable protection module with simple quick release mechanism allowing partial removal for easy line commissioning and maintenance as well as full removal for protection replacement
- Very low (1 Ω) in-line resistance for minimal system interference
- High (75 mA) maximum running current - can also be used on 10-50 mA systems (e.g. process control)
- Screen terminal enables easy connection of cable screen to earth
- Strong, flame retardant, polycarbonate housing
- Built-in innovative DIN rail foot with locking feature for simple positioning and clip-on mounting to top hat DIN rails
- 4 mm² terminals allow for larger cross section wiring, stranded wires terminated with ferrules or fitting two wires into a single terminal
- Convenient earthing through DIN foot and/or earth terminal

Application

Use these protectors on 4-20 mA loop systems - ideal where installation space is at a premium and large numbers of lines require protection, or for systems with long signal lines.

Installation

Connect in series with the 4-20 mA current loop either near where it enters or leaves the building or close to the equipment being protected (e.g. within its control panel). Either way, it must be very close to the system's earth star point. Install protectors either within an existing cabinet/ cubicle or in a separate enclosure.

Accessories

OVR SL30L/4-20/M
Module replacement
OVR SL/B
Base replacement

Weatherproof enclosure:
OVR WBX SLQ

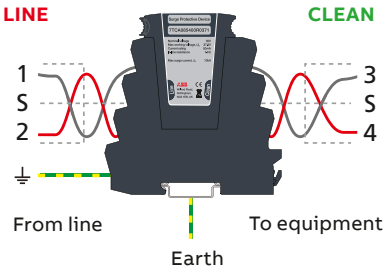

TECHNICAL NOTE: 4-20 mA current loops can serve multiple devices over a long distance. The devices and wiring produce a voltage drop (also known as "loop drops") but these do not reduce the 4-20 mA current as long as the power supply voltage is greater than the sum of the voltage drops around the loop at the maximum signalling current of 20 mA.For design considerations, each OVR SL30L/4-20 device installed within the loop introduces a 1.7 V loop drop.

NOTE: The OVR SL 'Slim Line' Series is also available for protection of systems up to 110 V as well as 3-wire, RS 485, RTD & telecommunication applications (OVR SL/3W, OVR SL RS485, OVR SL RTD & OVR SL TN). The OVR SL X Series has approvals for use in hazardous areas.

Protection and safety

Data & signal protection

OVR SL LED 4-20 mA Series

OVR SL LED 4-20 mA Series - Technical specification

Electrical specification	OVR SL30L/4-20
ABB order code	7TCA085400R0371
Nominal voltage(1)	30 V
Maximum working voltage *Uc* (RMS/DC)(2)	25 V / 36.7 V
Current rating (signal)(3)	75 mA
In-line resistance (per line ±10%)	1.0 Ω
Series voltage drop(4)	1.7 V
Bandwidth (-3 dB 50 Ω systems)	45 MHz
Transient specification	**OVR SL30L/4-20**
Let-through voltage (all conductors)(5) Up	
C2 test 4 kV 1.2/50 µs, 2 kA 8/20 µs to BS EN/EN/IEC 61643-21	63.0 V
C1 test 1 kV, 1.2/50 µs, 0.5 kA 8/20 µs to BS EN/EN/IEC 61643-21	51.3 V
B2 test 4 kV 10/700 µs to BS EN/EN/IEC 61643-21	45.4 V
5 kV, 10/700 µs(6)	46.3 V
Maximum surge current	
D1 test 10/350 µs to BS EN/EN/IEC 61643-21: – Per signal wire – Per pair	1.25 kA 2.5 kA
8/20 µs to ITU-T K.45:2003, IEEE C62.41.2:2002: – Per signal wire – Per pair	5 kA 10 kA
Mechanical specification	**OVR SL30L/4-20**
Temperature range	-40 to +80 °C
Connection type	Screw terminal - maximum torque 0.8 Nm
Conductor size (stranded)	4 mm²
Earth connection	Via DIN rail or 4 mm² earth terminal - maximum torque 0.8 Nm
Case material	FR Polymer UL-94 V-0
Weight: – Unit	0.08 kg
Dimensions	See diagram below

(1) Nominal voltage (RMS/DC or AC peak) measured at < 10 µA
(2) Maximum working voltage (RMS/DC or AC peak) measured at < 1 mA leakage
(3) The minimum current for LED indicator operation is 2 mA
(4) At 20 mA
(5) The maximum transient voltage let-through of the protector throughout the test (±10%), line to line & line to earth, both polarities. Response time < 10 ns
(6) Test to IEC 61000-4-5:2006, ITU-T (formerly CCITT) K.20, K.21 and K.45, Telcordia GR-1089-CORE, Issue 2:2002, ANSI TIA/EIA/IS-968-A:2002 (formerly FCC Part 68)

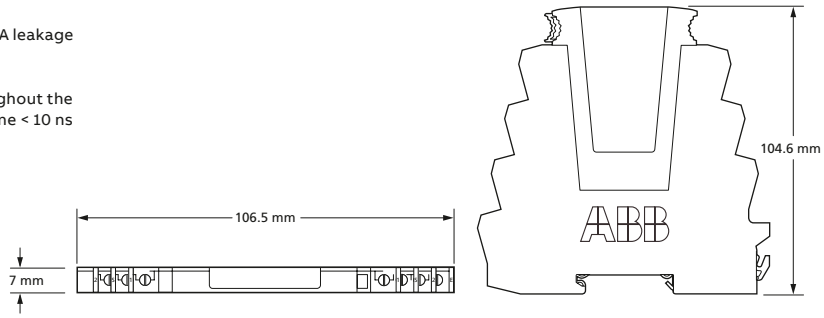

ABB order codes

Part	ABB order code	Part	ABB order code
OVR SL30L/4-20	7TCA085400R0371	**OVR SL/B**	7TCA085400R0320
OVR SL30L/4-20/I	7TCA085400R0372	**OVR SL/I/B**	7TCA085400R0321
OVR SL30L/4-20/M	7TCA085400R0373	**OVR WBX SLQ**	7TCA085400R0326

Protection and safety

Data & signal protection
OVR Q Series



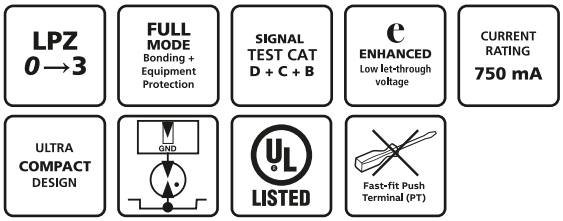

Combined Category D, C, B (to IEC/EN 61643) Surge Protective Device (SPD) suitable for 4 twisted pair lines. Available for working voltages of up to 6, 15, 30, 50, 110 and 180 Volts. For use at boundaries up to LPZ 0 to protect against flashover (typically the service entrance location) through to LPZ 3 to protect sensitive electronic equipment.

Features & benefits

- Very low let-through voltage (enhanced protection to IEC/BS EN 62305) between all lines - Full Mode protection
- Full Mode design capable of handling partial lightning currents as well as allowing continual operation of protected equipment
- Repeated protection in lightning intense environments
- Almost twice as space efficient as smallest competitor
- Standard DIN module (18 mm) depth
- Removable (plug-in) terminals allow pre-wiring of cable looms, for easier installation
- Suitable for earthed or isolated screen systems
- Built-in DIN rail foot for clip-on mounting to top hat or G DIN rails
- Optional flat mounting on side
- 2.5 mm² terminals allow for larger cross section wiring, stranded wires terminated with ferrules or fitting two wires into a single terminal
- Fast fit screwless Push Terminal versions (OVR X/PT) allow quick tool-less cable connection saving installation time
- Very low resistance to minimizes unwanted signal strength reductions
- Strong, flame retardant, ABS housing
- Colour coded terminals (grey for line, green for clean) give a quick and easy installation check
- Screen terminal enables easy connection of cable screen, maintaining continuity through the SPD between the input and output connectors.
- Simple, yet substantial, connection to earth via DIN rail
- OVR 06Q-180Q (and /PT variants) have UL497b approval under E240341

Application

Use these SPDs where installation space is at a premium and large numbers of lines require protection.

Installation

Connect in series with the signal or data line either near where it enters or leaves the building or close to the equipment being protected. Install in a cabinet/cubicle close to the system's earth star point.

Accessories

Weather proof enclosures:
OVR WBX SLQ (with transparent lid)
ABB order code
7TCA085400R0326

OVR WBX SLQ/G (with opaque grey lid)
ABB order code
7TCA085400R0327

OVR 06Q, OVR 15Q, OVR 30Q, OVR 50Q and OVR 110Q installed in series (in-line)

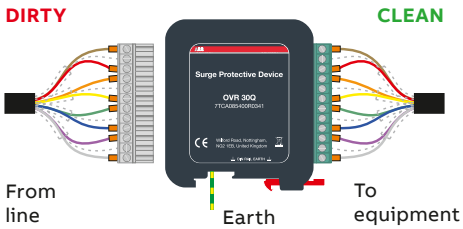

NOTE: The OVR Q Series is also available for protection of RS 485 and RTD applications (OVR RS485Q, OVR RTDQ). Protectors for individual data and signal lines are available (OVR D Series and Slim Line OVR SL Series). Alternatively, for individual protectors with higher current or bandwidth use the OVR E and OVR H Series. For telecommunication applications use OVR TNQ Series.

Protection and safety

Data & signal protection

OVR Q Series

OVR Q Series - Technical specification

Electrical specification	OVR 06Q Series	OVR 15Q Series	OVR 30Q Series	OVR 50Q Series	OVR 110Q Series	OVR 180Q Series
Nominal voltage[1]	6 V	15 V	30 V	50 V	110 V	180 V
Maximum working voltage *Uc* (RMS/DC)[2]	5 V / 7.79 V	13 V / 18.8 V	26 V / 37.8 V	41 V / 57.8 V	93 V / 132 V	130 V/190 V
Current rating (signal)	750 mA				500 mA	250 mA
In-line resistance (per line ±10%)	1.0 Ω				3.3 Ω	6.8 Ω
Bandwidth (-3 dB 50 Ω system)	45 MHz					
Transient specification						
Let-through voltage (all conductors)[3] Up						
C2 test 4 kV 1.2/50 µs, 2 kA 8/20 µs to BS EN/EN/IEC 61643-21	15.0 V	28.0 V	53.0 V	84.0 V	188 V	215 V
C1 test 1 kV, 1.2/50 µs, 0.5 kA 8/20 µs to BS EN/EN/IEC 61643-21	12.5 V	26.5 V	48.0 V	76.0 V	175 V	205 V
B2 test 4 kV 10/700 µs to BS EN/EN/IEC 61643-21	10.0 V	23.0 V	43.5 V	64.5 V	145 V	203 V
5 kV, 10/700 µs[4]	10.8 V	26.2 V	44.3 V	65.8 V	150 V	200 V
Maximum surge current						
D1 test 10/350 µs to BS EN/EN/IEC 61643-21: – Per signal wire – Per pair	2.5 kA 5 kA					
8/20 µs to ITU-T K.45:2003, IEEE C62.41.2:2002: – Per signal wire – Per pair	10 kA 20 kA					
Mechanical specification						
Temperature range	-40 to +80 °C					
Connection type	Pluggable 12 way screw terminal - maximum torque 0.6 Nm /PT version: Pluggable 12 way screwless Push Terminal					
Conductor size (stranded)	2.5 mm^2					
Earth connection	Via DIN rail or M5 threaded hole in base of unit					
Case material	FR Polymer UL-94 V-0					
Weight: – Unit – Packaged (each)	0.1 kg 0.12 kg					
Dimensions	See diagram below					

[1] Nominal voltage (RMS/DC or AC peak) measured at < 5 µA (OVR 15Q, OVR 30Q, OVR 50Q, OVR 110Q) and < 200 µA (OVR 06Q)
[2] Maximum working voltage (RMS/DC or AC peak) measured at < 5 mA leakage (OVR 15Q, OVR 30Q, OVR 50Q, OVR 110Q)
[3] The maximum transient voltage let-through of the protector throughout the test (±10%), line to line & line to earth, both polarities. Response time < 10 ns
[4] Test to IEC 61000-4-5:2006, ITU-T (formerly CCITT) K.20, K.21 and K.45, Telcordia GR-1089-CORE, Issue 2:2002, ANSI TIA/EIA/IS-968-A:2002 (formerly FCC Part 68)

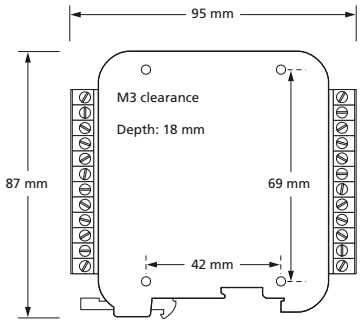

ABB order codes

Part	ABB order code	Part	ABB order code	Part	ABB order code
OVR RS485	7TCA085400R0311	**OVR RS485Q(UL)**	7TCA085400R0572	**OVR CME8**	7TCA085400R0415
OVR SLRS485/B	7TCA085400R0316	**OVR RS485Q/PT(UL)**	7TCA085400R0579	**OVR CME32**	7TCA085410R0046
OVR SLRS485	7TCA085400R0310	**OVR SLRS485/M**	7TCA085400R0317	**OVR WBXSLQ**	7TCA085400R0326
OVR SLRS485L	7TCA085400R0417	**OVR SLRS485L/M**	7TCA085400R0470	**OVR WBXSLQ/G**	7TCA085400R0327
OVR SLRS485(UL)	7TCA085400R0551	**OVR SLRS485L/M(UL)**	7TCA085400R0600	**WBX 4**	7TCA085410R0027
OVR SLRS485L(UL)	7TCA085400R0552	**OVR CME4**	7TCA085400R0414	**WBX 8**	7TCA085410R0030
OVR RS485Q	7TCA085400R0312	**OVR CME16**	7TCA085410R0045	**WBX 16/2/G**	7TCA085410R0020

Protection and safety

Data & signal protection

OVR RTD, RTDQ & SL RTD Series



LPZ 0→3 | FULL MODE Bonding + Equipment Protection | OVR SL RTD ULTRA SLIM 7 mm WIDTH | SIGNAL/ TELECOM TEST CAT D + C + B | ENHANCED Low let-through voltage | OVR RTDQ ULTRA COMPACT 18 mm WIDTH | LOW IN-LINE RESISTANCE | OVR SL RTD HIGH BANDWIDTH

Combined Category D, C, B tested protector (to BS EN 61643) suitable for 3-wire RTD systems to protect monitoring equipment. For use at boundaries up to LPZ 0 to protect against flashover (typically the service entrance location) through to LPZ 3. Available as standard OVR RTD format, or compact OVR RTDQ and Slim Line OVR SL RTD versions for installations where a high number of lines require protection.

Features & benefits

- Protects all three wires on a 3-wire RTD system with a single protector
- Very low let-through voltage (enhanced protection to IEC/BS EN 62305) between all lines - Full Mode protection
- Full Mode design capable of handling partial lightning currents as well as allowing continual operation of protected equipment
- Repeated protection in lightning intense environments
- Low in-line resistance minimizes reductions in signal strength
- Built-in DIN rail foot for simple mounting to top hat DIN rails
- Convenient earthing through DIN foot and/or earth terminal
- OVR RTD can be flat mounted on base or side
- OVR RTD and OVR RTDQ have colour coded terminals for quick and easy installation check
- OVR SL RTD has ultra slim 7mm width ideal for compact protection of large numbers of lines (e.g. process control installations)
- OVR SL RTD includes two stage removable protection module with simple quick release mechanism allowing partial removal for easy line commissioning and maintenance as well as full removal for protection replacement

For further information on RTD applications, see separate Application Note OVR AN001 (contact us for a copy).

Installation

Connect in series with the signal line either near where it enters or leaves the building or close to the equipment being protected ensuring it is very close to the system's earth star point. Install protectors either within an existing cabinet/cubicle or in a separate enclosure.

Accessories

Replacement module for OVR SL RTD:
OVR SLRTD/M
Standard module replacement
OVR SLRTD/B
Base replacement

Combined Mounting/Earthing kits for OVR RTD:
OVR CME 4 For up to 4 x OVR RTD
OVR CME 8 For up to 8 x OVR RTD
OVR CME 16 For up to 16 x OVR RTD
OVR CME 32 For up to 32 x OVR RTD

If protectors cannot be incorporated within an existing panel or enclosure, OVR WBX enclosures are available for up to 4, 8, 16 or 32 protectors and their associated OVR CME kit.

Weatherproof enclosure:
OVR WBX SLQ (OVR SLRTD and OVR RTD Q)

OVR RTD installed in series

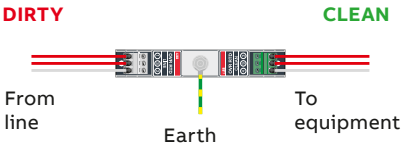

OVR RTDQ installed in series (in-line)

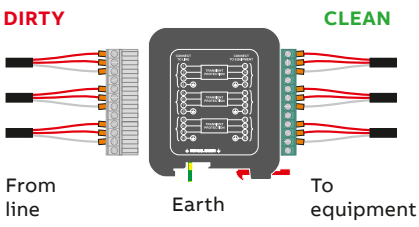

OVR SL RTD installed in series

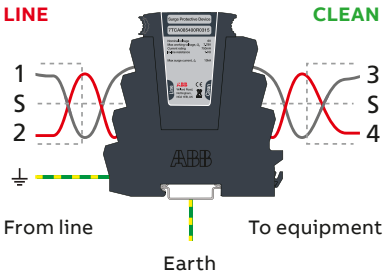

NOTE: For 2-wire or 4-wire RTD applications, use one or two OVR 06D or OVR SL06 protectors respectively.

Protection and safety

Data & signal protection

OVR RTD Series

OVR RTD, RTDQ & SL RTD Series - Technical specification

Electrical specification		OVR RTD	OVR SL RTD	OVR RTDQ
ABB order code		7TCA085400R0313	7TCA085400R0315	7TCA085400R0314
Nominal voltage [1]		6 V		
Maximum working voltage Uc (RMS/DC) [2]		5 V/7.79 V		
Current rating (signal)		200 mA	500 mA	700 mA
In-line resistance (per line ±10%)		10 Ω	1.0 Ω	1.0 Ω
Bandwidth (-3 dB 50 Ω system)		800 kHz	1.5 MHz	800 kHz
Transient specification		**OVR RTD**	**OVR SL RTD**	**OVR RTDQ**
Let-through voltage (all conductors) [3] Up				
C2 test 4 kV 1.2/50 µs, 2 kA 8/20 µs to BS EN/EN/IEC 61643-21		12.0 V	17.9 V	15.0 V
C1 test 1 kV, 1.2/50 µs, 0.5 kA 8/20 µs to BS EN/EN/IEC 61643-21		11.5 V	12.1 V	12.5 V
B2 test 4 kV 10/700 µs to BS EN/EN/IEC 61643-21		10.0 V	11.0 V	10.0 V
5 kV, 10/700 µs [4]		10.5 V	11.3 V	10.5 V
Maximum surge current				
D1 test 10/350 µs to BS EN/EN/IEC 61643-21	– Per signal wire	2.5 kA	1.25 kA	2.5 kA
	– Per pair	5 kA	2.5 kA	5 kA
8/20 µs to ITU-T K.45:2003, IEEE C62.41.2:2002	– Per signal wire	10 kA		
	– Per pair	20 kA		
Mechanical specification		OVR RTD	OVR SL RTD	OVR RTDQ
Temperature range		-40 to +80 °C		
Connection type		Screw terminal - max. torque 0.5 Nm	Screw terminal - max. torque 0.8 Nm	Pluggable 12 way screw terminal
Conductor size (stranded)		2.5 mm^2	4 mm^2	2.5 mm^2
Earth connection		M6 stud - max. torque 0.5 Nm	Via DIN rail or 4 mm^2 earth terminal - max. torque 0.8 Nm	Via DIN rail or M5 threaded hole in base of unit - max. torque 0.6 Nm
Case Material		FR Polymer UL-94 V-0		
Weight	– Unit	0.08 kg	0.08 kg	0.1 kg
	– Packaged (per 10)	0.85 kg	0.85 kg	1.3 kg
Dimensions		See diagram below		

OVR RTD

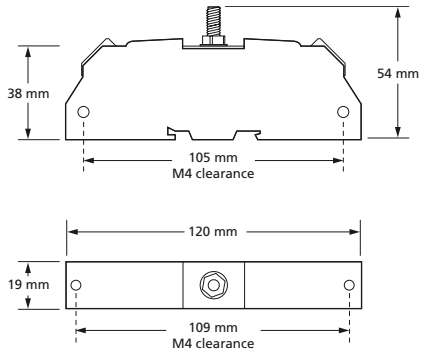

OVR RTDQ

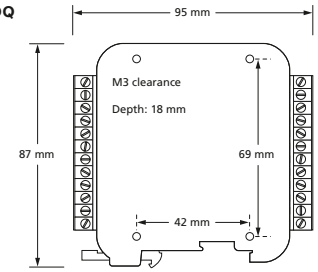

OVR SL RTD

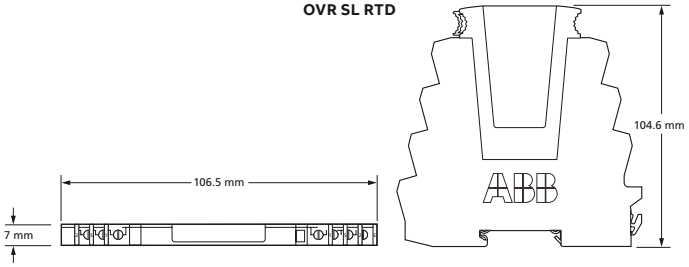

[1] Nominal voltage (RMS/DC or AC peak) measured at < 200 µA

[2] Maximum working voltage (RMS/DC or AC peak) measured at < 10 mA

[3] The maximum transient voltage let-through of the protector throughout the test (±10%), line to line & line to earth, both polarities. Response time < 10 ns

[4] Test to IEC 61000-4-5:2006, ITU-T (formerly CCITT) K.20, K.21 and K.45,Telcordia GR-1089-CORE, Issue 2:2002, ANSI TIA/EIA/IS-968-A:2002 (formerly FCC Part 68)

Protection and safety

Telecoms & computer line protection
OVR KT & KE Series



LPZ 0→3 | FULL MODE Bonding + Equipment Protection | SIGNAL/ TELECOM TEST CAT D + C + B | ENHANCED Low let-through voltage | HIGH BANDWIDTH | LOW IN-LINE RESISTANCE 4.4 Ω | GND

Combined Category D, C, B tested protector (to BS EN 61643) suitable for use on ten line LSA-PLUS disconnection modules to PBX telephone exchanges, ISDN and other telecoms equipment with LSA-PLUS disconnection modules. For use at boundaries up to LPZ 0 to protect against flashover (typically the service entrance location) through to LPZ 3 to protect sensitive electronic equipment.

Features & benefits

- Low cost protection for large numbers of data and signal lines
- Very low let-through voltage (enhanced protection to IEC/BS EN 62305) between all lines - Full Mode protection
- Full Mode design capable of handling partial lightning currents as well as allowing continual operation of protected equipment
- Repeated protection in lightning intense environments
- Colour of housing distinguishes electrically different protectors - avoids confusion when installed together on the same distribution frame
- Quick and easy plug-in installation, with 'bump' location feedback
- Under power line cross conditions/PTC versions offer safe disconnection during fault duration. Unit auto-resets once fault corrected
- At larger installations OVR K10T1 and OVR K10T1/PTC provide all in one protection for all ten lines on LSA-PLUS disconnection modules
- Use the OVR KE10 to provide trouble free earthing for up to ten OVR KT1 and OVR KT1/PTC (per disconnection module)
- OVR K10T1 and OVR K10T1/PTC have an integral earth connection, and an external M4 earth bush for use with non-metallic LSA-Plus frames
- OVR KT1/PTC and OVR K10T1/PTC have resettable overcurrent protection and are rated for power cross faults
- OVR KT1, OVR KT1/PTC, OVR K10T1 and OVR K10T1/PTC are suitable for telecoms applications in accordance with Telcordia and ANSI Standards

Application

- For PSTN (e.g POTS, dial-up, lease line, T1/E1, *DSL and Broadband) and U interface ISDN lines, use OVR KT1 (or OVR KT1/PTC) and OVR K10T1 (or OVR K10T1/PTC)
- Protect single lines with OVR KT1 or OVR KT1/PTC
- Protect all ten lines on a disconnection module with OVR K10T1 or OVR K10T1/PTC

Installation

Install protectors on all lines that enter or leave each building (including extensions to other buildings). Identify the lines requiring protection and plug-in the protector (ensuring the correct orientation) for a series connection. Plug OVR K10T1 or OVR K10T1/PTC directly into each disconnection module requiring protection.

OVR KT1 and OVR KT1/PTC must be installed via the OVR KE10 earth bar. Clip an OVR KE10 on to the disconnection module and plug an OVR KT1 or OVR KT1/PTC in to each line on the module that needs protecting. In the unlikely situation that the protector is damaged, it will sacrifice itself and fail short circuit, taking the line out of commission, indicating it needs replacing and preventing subsequent transients from damaging equipment.

For further information on global telephony applications, see separate Application Note OVR AN005 (contact us for a copy).

NOTE: For individual telephone lines and lines at unmanned sites the high performance OVR TN or plug-in OVR TN/JP or OVR TN/RJ11 Series should be used.
For plug-in S/T interface ISDN protection, use the ISDN Series protectors.

Protection and safety

Telecoms & computer line protection

OVR KT & KE Series

OVR KT & KE Series - Technical specification

Electrical specification		**OVR KT1**	**OVR KT1/PTC**	**OVR K10T1**	**OVR K10T1/PTC**
ABB order code		7TCA085400R0305	7TCA085400R0306	7TCA085400R0307	7TCA085400R0410
Maximum working voltage Uc [1]	– line to line	296 V	296 V	296 V	296 V
	– line to earth	296 V	296 V	296 V	296 V
Current rating (signal)		300 mA	145 mA	300 mA	145 mA
In-line resistance (per line ±10%)		4.4 Ω			
Bandwidth (-3 dB 50 Ω system)		20 MHz	20 MHz	20 MHz	20 MHz
Transient specification		**OVR KT1**	**OVR KT1/PTC**	**OVR K10T1**	**OVR K10T1/PTC**
Let-through voltage (all conductors) [2] Up					
C2 test 4 kV 1.2/50 µs, 2 kA 8/20 µs to BS EN/EN/IEC 61643-21	– line to line	395 V	395 V	395 V	395 V
	– line to earth	395 V	395 V	395 V	395 V
C1 test 1 kV, 1.2/50 µs, 0.5 kA 8/20 µs to BS EN/EN/IEC 61643-21	– line to line	390 V	390 V	390 V	390 V
	– line to earth	390 V	390 V	390 V	390 V
B2 test 4 kV 10/700 µs to BS EN/EN/IEC 61643-21	– line to line	298 V	298 V	298 V	298 V
	– line to earth	298 V	298 V	298 V	298 V
5 kV, 10/700 µs [3]	– line to line	300 V	300 V	300 V	27 V
	– line to earth	300 V	300 V	300 V	80 V
Maximum surge current [4]					
D1 test 10/350 µs to BS EN/EN/IEC 61643-21	– line to line	1 kA			
	– line to earth	2 kA			
8/20 µs to ITU-T K.45:2003, IEEE C62.41.2:2002	– line to line	5 kA			
	– line to earth	10 kA			
Power Faults specification		**OVR KT1**	**OVR KT1/PTC**	**OVR K10T1**	**OVR K10T1/PTC**
Power/Line Cross and Power Induction - tests to: ITU-T (formerly CCITT) K.20, K.21 and K.45, Telcordia GR-1089-CORE, Issue 2:2002, UL 60950/IEC 950					
Power/line cross		–	110/230 Vac (15 min)	–	110/230 Vac (15 min)
Power induction		–	600 V, 1 A (0.2 sec)	–	600 V, 1 A

Mechanical specification		**OVR KT1, OVR KT1/PTC**	**OVR K10T1, OVR K10T1/PTC**	**OVR KE10**
Temperature range		-40 to +80 °C		–
Connection type		To LSA-PLUS disconnection modules (BT part number 237A)		–
Earth connection		Via OVR KE10 earth bar	Via integral earth clip/external M4 bush	–
Material		FR Polymer UL-94 V-0		Stainless Steel
Weight	– Unit	0.01 kg	0.10 kg	0.01 kg
	– Packaged	0.12 kg (per 10)	0.12 kg	0.10 kg (per 10)
Dimensions		See diagram below		

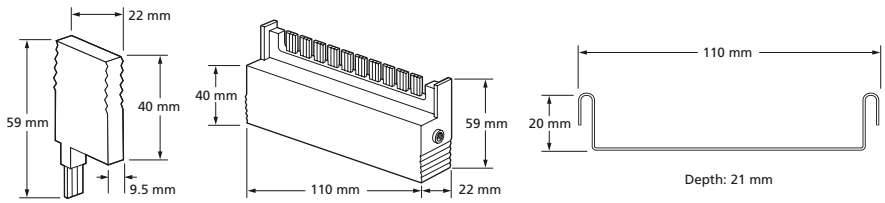

[1] Maximum working voltage (DC or AC peak) at 10 µA for OVR KT1, OVR KT1/PTC, OVR K10T1, OVR K10T1/PTC

[2] The maximum transient voltage let-through of the protector throughout the test (±10%), line to line & line to earth, both polarities. Response time < 10 ns

[3] Test to IEC 61000-4-5:2006, ITU-T (formerly CCITT) K.20, K.21 and K.45,Telcordia GR-1089-CORE, Issue 2:2002, ANSI TIA/EIA/IS-968-A:2002 (formerly FCC Part 68)

[4] The installation and connections external to the protector may limit the capability of the protector

Protection and safety

Telecoms & computer line protection
OVR TN/RJ11 & ISDN/RJ45 Series



LPZ 0→3 | FULL MODE Bonding + Equipment Protection | SIGNAL/TELECOM TEST CAT D + C + B | ENHANCED Low let-through voltage | LOW IN-LINE RESISTANCE 4.4 Ω | CURRENT RATING 300 mA

Combined Category D, C, B tested protector (to BS EN 61643) suitable to protect telephony equipment plugged into a Modem (RJ11) or ISDN (RJ45) socket. For use at boundaries up to LPZ 0 to protect against flashover (typically the service entrance location) through to LPZ 3 to protect sensitive electronic equipment.

Features & benefits

- Very low let-through voltage (enhanced protection to IEC/BS EN 62305) between all lines - Full Mode protection
- Full Mode design capable of handling partial lightning currents as well as allowing continual operation of protected equipment
- Repeated protection in lightning intense environments
- Substantial earth connection to enable effective earthing
- Supplied in a sturdy ABS housing ready for flat mounting, or vertically via TS35 'Top Hat' DIN rail
- OVR TN/RJ11-2/6, OVR TN/RJ11-4/6 and OVR TN/RJ11-6/6 are suitable for telecommunication applications in accordance with Telcordia and ANSI Standards (see Application Note OVR AN005)

Application

- For PSTN (e.g. POTS, dial-up, lease line, T1/E1, *DSL and Broadband) use TN/RJ11
- OVR TN/RJ11... are suitable for use on telephone lines with a maximum (or ringing) voltage of up to 296 Volts
- For telephone lines with RJ11 connections protect the middle 2 (of 6) conductors with OVR TN/RJ11-2/6, the middle 4 (of 6) with OVR TN/RJ11-4/6 or all 6 with OVR TN/RJ11-6/6
- For S/T interface ISDN lines, use OVR ISDN/RJ45-4/8 and OVR ISDN/RJ45-8/8
- For S/T interface ISDN lines with RJ45 connections protect the middle 4 (of 8) conductors (paired 3&6, 4&5) with OVR ISDN/RJ45-4/8, or all 8 (outside pairs 1&2, 7&8) with OVR ISDN/RJ45-8/8

For further information on RJ45 ISDN applications, see separate Application Note OVR AN002 and for global telephony applications, see separate Application Note OVR AN005 (contact us for a copy).

Installation

Connect in series with the telephone or ISDN line. These units are usually installed close to the equipment being protected and within a short distance of a good electrical earth.

Accessories

OVR CAT5e/UTP-1
1 metre cable with RJ45 connections

Plug-in series connection for OVR TN/RJ11-2/6, 4/6 & 6/6

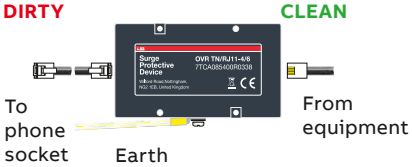

Plug-in series connection for OVR ISDN/RJ45-4/8 & 8/8



NOTE: For non-ISDN wire-in applications the high performance OVR TN, OVR SLTN or OVR TNQ can be used.
Protect PBX telephone exchanges and other equipment with LSA-PLUS connections using OVR KT series.

Protection and safety

Telecoms & computer line protection

OVR TN/RJ11 & ISDN/RJ45 Series

OVR TN/RJ11 & ISDN/RJ45 Series - Technical specification

Electrical specification		**OVR TN/ RJ11-2/6**	**OVR TN/ RJ11-4/6**	**OVR TN/ RJ11-6/6**	**OVR ISDN/ RJ45-4/8**	**OVR ISDN/ RJ45-8/8**
ABB order code		7TCA085400R0337	7TCA085400R0338	7TCA085400R0339	7TCA085460R0359	7TCA085460R0360
Nominal voltage		296 V	296 V	296 V	5 V	5 V/58 V [2]
Maximum working voltage Uc [1]		296 V	296 V	296 V	58 V	58 V
Current rating (signal)		300 mA				
In-line resistance (per line ±10%)		4.4 Ω				
Bandwidth (-3 dB 50 Ω system)		20 MHz	20 MHz	20 MHz	19 MHz	19 MHz
Transient specification		**OVR TN/ RJ11-2/6**	**OVR TN/ RJ11-4/6**	**OVR TN/ RJ11-6/6**	**OVR ISDN/ RJ45-4/8**	**OVR ISDN/ RJ45-8/8**
Let-through voltage (all conductors) [3] Up						
C2 test 4 kV 1.2/50 µs, 2 kA 8/20 µs to BS EN/EN/IEC 61643-21	– line to line	395 V	395 V	395 V	28 V	28 V/88 V [5]
	– line to earth	395 V	395 V	395 V	88 V	88 V
C1 test 1 kV, 1.2/50 µs, 0.5 kA 8/20 µs to BS EN/EN/IEC 61643-21	– line to line	390 V	390 V	390 V	23 V	23 V/63 V [5]
	– line to earth	390 V	390 V	390 V	63 V	63 V
B2 test 4 kV 10/700 µs to BS EN/EN/IEC 61643-21	– line to line	298 V	298 V	298 V	26 V	26 V/65 V [5]
	– line to earth	298 V	298 V	298 V	65 V	65 V
5 kV, 10/700 µs [4]	– line to line	300 V	300 V	300 V	27 V	27 V/80 V [5]
	– line to earth	300 V	300 V	300 V	80 V	80 V
Maximum surge current [6]						
D1 test 10/350 µs to BS EN/EN/IEC 61643-21		1 kA				
8/20 µs to ITU-T K.45:2003, IEEE C62.41.2:2002:		10 kA				
Mechanical specification		**OVR TN/ RJ11-2/6**	**OVR TN/ RJ11-4/6**	**OVR TN/ RJ11-6/6**	**OVR ISDN/ RJ45-4/8**	**OVR ISDN/ RJ45-8/8**
Temperature range		-40 to +80 °C				
Connection type		RJ11 plug and socket	RJ11 plug and socket	RJ11 plug and socket	RJ45 plug and socket	RJ45 plug and socket
Earth connection		M4/DIN rail				
Case Material		FR Polymer UL-94 V-0				
Weight	– Unit	0.15 kg				
	– Packaged	0.2 kg				
Dimensions		See diagram below				

OVR ISDN/RJ45-4/8, 8/8
cable length: 0.5 m

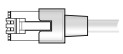

OVR TN/RJ11-2/6, 4/6, 6/6
cable length: 1 m

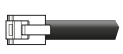

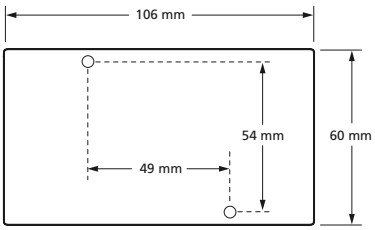

Depth: 24 mm
Fixing centres 49 x 54 mm, M3 clearance

[1] Maximum working voltage (DC or AC peak) measured at < 10 µA leakage for OVR TN/RJ11 products and < 5 µA for OVR ISDN/RJ45 products
[2] Maximum working voltage is 5 V for pairs 3/6 & 4/5, and 58 V for pairs 1/2 & 7/8
[3] The maximum transient voltage let-through of the protector throughout the test (±10%), line to line & line to earth, both polarities. Response time < 10 ns
[4] Test to IEC 61000-4-5:2006, ITU-T (formerly CCITT) K.20, K.21 and K.45,Telcordia GR-1089-CORE, Issue 2:2002, ANSI TIA/EIA/IS-968-A:2002 (formerly FCC Part 68)
[5] The first let-through voltage value is for pairs 3/4 & 5/6, and the second value is for pairs 1/2 & 7/8
[6] The installation and connectors external to the protector may limit the capability of the protector

Protection and safety

Data & signal protection

OVR TN, TNQ & SL TN Series



FULL MODE Bonding + Equipment Protection

OVR SLTN ULTRA SLIM 7 mm WIDTH

LPZ 0→3

ENHANCED Low let-through voltage

OVR TNQ ULTRA COMPACT 18 mm WIDTH

SIGNAL/ TELECOM TEST CAT D + C + B

LOW IN-LINE RESISTANCE

HIGH BANDWIDTH

Combined Category D, C, B tested protector (to BS EN 61643) specifically designed for telecommunications applications in accordance with Telcordia and ANSI standards (see Application Note OVR AN005). For use at boundaries up to LPZ 0 to protect against flashover (typically the service entrance location) through to LPZ 3. Available as standard OVR TN format, or compact OVR TNQ and Slim Line OVR SL TN versions for installations where a high number of lines require protection.

Features & benefits

- Very low let-through voltage (enhanced protection to IEC/BS EN 62305) between all lines - Full Mode protection
- Full Mode design capable of handling partial lightning currents as well as allowing continual operation of protected equipment
- Repeated protection in lightning intense environments
- 20 MHz bandwidth greatly exceeds VDSL2+ (50Mbps ~ 7MHz) maximum speeds
- Low in-line resistance minimizes reductions in signal strength
- Built-in DIN rail foot for simple mounting to top hat DIN rails
- Convenient earthing through DIN foot and/or earth terminal
- OVR TN can be flat mounted on base or side
- OVR TN and OVR TNQ have colour coded terminals for quick and easy installation check
- OVR SL TN has ultra slim 7 mm width ideal for compact protection of large numbers of lines (e.g. process control installations)
- OVR SL TN includes two stage removable protection module with simple quick release mechanism allowing partial removal for easy line commissioning and maintenance as well as full removal for protection replacement
- OVR SL TN includes optional LED status indication (add L suffix to part number - i.e. OVR SL TNL)

Application

Connect in series with the signal line either near where it enters or leaves the building or close to the equipment being protected ensuring it is very close to the system's earth star point. Install protectors either within an existing cabinet/cubicle or in a separate enclosure.

Accessories

Replacement module for OVR SL TN:
OVR SLTN/M
Standard module replacement

Combined Mounting/Earthing kits for OVR RS485:
OVR CME 4 For up to 4 x OVR TN
OVR CME 8 For up to 8 x OVR TN
OVR CME 16 For up to 16 x OVR TN
OVR CME 32 For up to 32 x OVR TN

If protectors cannot be incorporated within an existing panel or enclosure, OVR WBX enclosures are available for up to 4, 8, 16 or 32 protectors and their associated OVR CME kit.

Weatherproof enclosure:
OVR WBX SLQ (OVR SLTN and OVR TNQ)

OVR TN installed in series

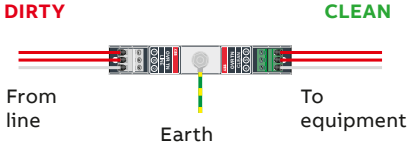

OVR SL TN installed in series

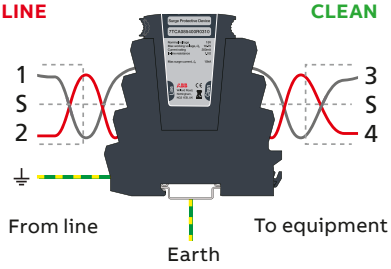

OVR TNQ installed in series (in-line)

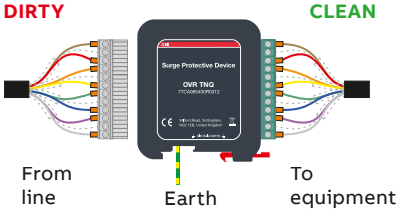

NOTE: The OVR KT Series is also available for telecommunications application using LSA-PLUS disconnection modules. Plug-in solutions are also available for RJ11 connections (see OVR TN RJ11 Series).

Protection and safety

Data & signal protection

OVR TN, TNQ & SL TN Series

OVR TN, TNQ & SL TN Series - Technical specification

Electrical specification		OVR TN	OVR SL TN, OVR SL TNL	OVR TNQ
ABB order code		7TCA085400R0345	7TCA085400R0323, 7TCA085400R0418	7TCA085400R0344
Nominal voltage [1]		–		
Maximum working voltage Uc (RMS/DC) [2]		–/296 V		
Current rating (signal)		300 mA		
In-line resistance (per line ±10%)		4.4 Ω		
Bandwidth (-3 dB 50 Ω system)		20 MHz		
Transient specification		**OVR TN**	**OVR SL TN , OVR SL TNL**	**OVR TNQ**
Let-through voltage (all conductors) [3] Up				
C2 test 4 kV 1.2/50 µs, 2 kA 8/20 µs to BS EN/EN/IEC 61643-21		395 V		
C1 test 1 kV, 1.2/50 µs, 0.5 kA 8/20 µs to BS EN/EN/IEC 61643-21		390 V		
B2 test 4 kV 10/700 µs to BS EN/EN/IEC 61643-21		298 V		
5 kV, 10/700 µs [4]		300 V		
Maximum surge current				
D1 test 10/350 µs to BS EN/EN/IEC 61643-21	– Per signal wire	2.5 kA	1.25 kA	2.5 kA
	– Per pair	5 kA	2.5 kA	5 kA
8/20 µs to ITU-T K.45:2003, IEEE C62.41.2:2002	– Per signal wire	10 kA		
	– Per pair	20 kA		
Mechanical specification		**OVR TN**	**OVR SL TN , OVR SL TNL**	**OVR TNQ**
Temperature range		-40 to +80 °C		
Connection type		Screw terminal - max. torque 0.5 Nm	Screw terminal - max. torque 0.8 N	Pluggable 12 way screw terminal
Conductor size (stranded)		2.5 mm^2	4 mm^2	2.5 mm^2
Earth connection		M6 stud	Via DIN rail or 4 mm^2 earth terminal - max. torque 0.8 Nm	Via DIN rail or M5 threaded hole in base of unit
Case Material		FR Polymer UL-94 V-0		
Weight	– Unit	0.08 kg		0.1 kg
	– Packaged (per 10)	0.85 kg		1.3 kg
Dimensions		See diagram below		

OVR TN

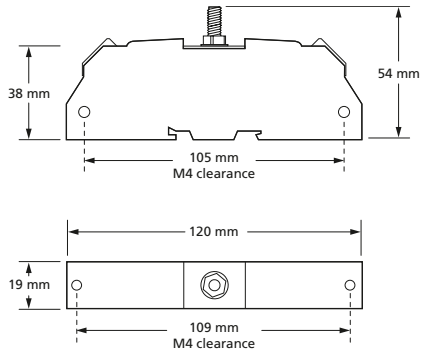

OVR TNQ

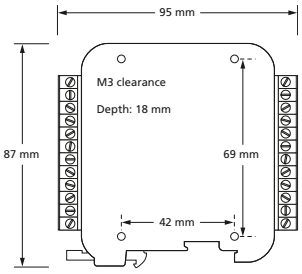

OVR SL TN

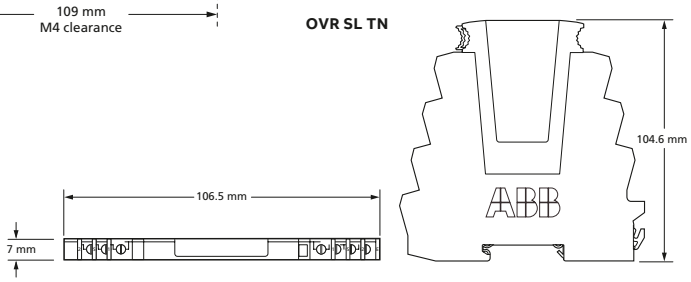

[1] Nominal voltage (RMS/DC or AC peak) measured at < 10 µA
[2] Maximum working voltage (RMS/DC or AC peak) measured at < 5 mA
[3] The maximum transient voltage let-through of the protector throughout the test (±10%), line to line & line to earth, both polarities. Response time < 10 ns
[4] Test to IEC 61000-4-5:2006, ITU-T (formerly CCITT) K.20, K.21 and K.45,Telcordia GR-1089-CORE, Issue 2:2002, ANSI TIA/EIA/IS-968-A:2002 (formerly FCC Part 68)

Protection and safety

Telecom & computer line protection
OVR Cat-5 & Cat-6 Series



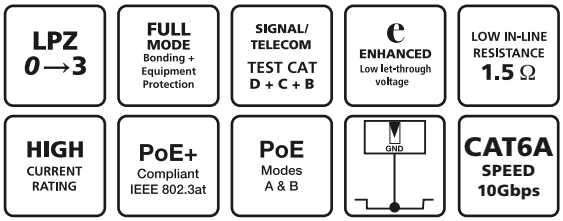

Combined Category D, C, B tested protector (to BS EN 61643) suitable to protect twisted pair Ethernet networks, including Power over Ethernet (PoE), with RJ45 connections. For use at boundaries up to LPZ 0 to protect against flashover (typically the service entrance location) through to LPZ 3 to protect sensitive electronic equipment.

Features & benefits

- Suitable for systems signalling on up to eight wires of either shielded or unshielded twisted pair cable
- Very low let-through voltage (enhanced protection to IEC/BS EN 62305) between all lines - Full Mode design capable of handling partial lightning currents as well as allowing continual operation of protected equipment
- Repeated protection in lightning intense environments
- Unlike some competing devices, the ethernet SPDs provide effective protection without impairing the system's normal operation
- Low capacitance circuitry prevents the start-up signal
- degradation associated with other types of network protector
- Low in-line resistance minimizes unnecessary reductions in signal strength to maximize signalling distance
- Sturdy ABS housing with convenient holes for flat mounting, or vertically via TS35 'Top Hat' DIN rail
- Substantial earth connection to enable effective earthing
- Will protect all PoE powering modes A and B.

Application

Use these protectors on network cables that travel between buildings to prevent damage to equipment, e.g. computers, servers, repeaters and hubs. Suitable for computer networks up to Cat-6A cabling.

- To protect up to 100baseT networks with Cat-5/Cat-5e cabling use OVR Cat-5e
- To protect up to 1000baseT/10GbaseT networks with Cat-6/Cat-6A cabling use OVR Cat-6
- To protect up to 100baseT Power over Ethernet (PoE) networks with Cat-5/Cat-5e use OVR Cat-5e/PoE
- To protect up to 1000baseT/10GbaseT Power over Ethernet (PoE) networks with Cat-6/Cat-6A cabling use OVR Cat-6/PoE

For further application information, see separate Application Note OVR AN004 (contact us for a copy).

Installation

Connect in series with the network cable, either:

- Near to where it enters or leaves the building, or
- As it enters the network hub, or
- Close to the equipment being protected

This should be close to the system's earth star point (to enable a good connection to earth).

Plug-in series connection

Accessories

OVR CAT5e/UTP-1
1 metre cable with unshielded RJ45 connections

OVR CAT6/STP-2
2 metre screened cable with shielded RJ45 connections



TECHNICAL NOTE: The interfaces used in Ethernet networks incorporate an isolation transformer which gives these systems an in-built immunity to transients between line and earth of 1,500 Volts or more.

NOTE: To protect datacomms systems based on twisted pairs, use the OVR D, E or H Series. Local protection for networked equipment is also available.

Protection and safety

Telecom & computer line protection

OVR Cat-5 & Cat-6 Series

OVR Cat-5 & Cat-6 Series - Technical specification

Electrical Specification		OVR Cat-5e	OVR Cat-5e/PoE	OVR Cat-6	OVR Cat-6/PoE
ABB order code		7TCA085400R0289	7TCA085400R0290	7TCA085400R0291	7TCA085400R0292
Maximum working voltage Uc [1]	– data [2]	5 V			
	– power [3]	–	58 V	–	58 V
Current rating		300 mA	600 mA [4]	300 mA	600 mA [4]
In-line resistance (per line ±25%)	– data [2]	1.5 Ω			
	– power	–	1.5 Ω	–	–
Maximum data rate		100 Mbps	100 Mbps	1000 Mbps	1000 Mbps
Networking standards		10/100baseT	10/100baseT	10/100/1000/ 10GbaseT	10/100/1000/ 10GbaseT
		TIA Cat-5e	TIA Cat-5/PoE	TIA Cat-6	TIA Cat-6
		IEEE 802.3i	IEEE 802.3i	IEEE 802.3i	IEEE 802.3i
		IEEE 802.3u	IEEE 802.3u	IEEE 802.3u	IEEE 802.3u
		–	IEEE 802.3af	IEEE 802.3ab	IEEE 802.3ab
		–	IEEE 802.3at	IEEE 802.3an	IEEE 802.3an
		–	–	–	IEEE 802.3af
		–	–	–	IEEE 802.3at
Transient specification		**OVR Cat-5e**	**OVR Cat-5e/PoE**	**OVR Cat-6**	**OVR Cat-6/PoE**
Let-through voltage (all conductors) [5] Up					
C2 test 4 kV 1.2/50 µs, 2 kA 8/20 µs to BS EN/EN/IEC 61643-21	– line to line	120 V	120 V/116 V [8]	120 V	120 V/116 V [8]
	– line to earth [6]	700 V		900 V	900 V
C3 test 1kV/µs, 100A 10/1000 µs to BS EN/EN/IEC 61643-21	– line to line	-	-	15 V	15 V
	– pair to pair (PoE)	-	-	-	90 V
C1 test 1 kV, 1.2/50 µs, 0.5 kA 8/20 µs to BS EN/EN/IEC 61643-21	– line to line	74 V	74 V/95 V [8]	74 V	74 V/95 V [8]
	– line to earth [6]	600 V			
B2 test 1kV 10/700µs, 25A 5/320µs to BS EN/EN/IEC 61643-21	– line to line	-	-	9 V	9 V
	– pair to pair (PoE)	-	-	-	85 V
B2 test 4 kV 10/700 µs to BS EN/EN/IEC 61643-21	– line to line	21 V	21 V/87 V [8]	21 V	21 V/87 V [8]
	– line to earth [6]	550 V		700 V	700 V
5 kV, 10/700 µs [7]	– line to line	25 V	25 V/90 V [8]	25 V	25 V/90 V [8]
	– line to earth [6]	600 V			
Maximum surge current [9]					
D1 test 10/350 µs to BS EN/EN/IEC 61643-21	– line to line	1 kA	-	-	-
	– line to earth [6]	-	-	1 kA	1 kA
8/20 µs to ITU-T K.45:2018, IEEE C62.41.2:2002	– line to line	-	-	150 A	150 A
	– line to earth [6]	10 kA		10 kA	10 kA
Mechanical specification		**OVR Cat-5e, OVR Cat-5e/PoE**		**OVR Cat-6, OVR Cat-6/PoE**	
Temperature range		-40 to +80 °C		-40 to +80 °C	
Connection type		RJ45 sockets		RJ45 sockets	
Cable (supplied)		0.5 m Cat-5e UTP patch lead		0.5 m Cat-6 shielded patch lead[8]	
Earth connection		M4/DIN rail		M4/DIN rail	
Case Material		FR Polymer UL-94 V-0		FR Polymer UL-94 V-0	
Weight	– Unit	0.15 kg		0.15 kg	
	– Packaged	0.2 kg			
Dimensions		See diagram below		See diagram below	

[1] Maximum working voltage (DC or AC peak) measured at 1 mA leakage
[2] Data pairs 1/2 and 3/6 are protected as standard. Pairs 4/5 and 7/8 are also protected on Cat-6 barriers
[3] PoE protectors transmit power Mode A and Mode B power
[4] Based on 30W of transmitted PSE power, to IEEE 802.3at.
[5] The maximum transient voltage let-through of the protector throughout the test (±10%), line to line & line to earth. Response time <10 ns (on all protected pairs)
[6] The interfaces used in network systems incorporate an isolation transformer that inherently provides an inbuilt immunity to transients between line and earth of 1,500 Volts or more
[7] Test to IEC 61000-4-5:2014, ITU-T (formerly CCITT) K.20, K.21 and K.45,Telcordia GR-1089-CORE, Issue 6:2011, ANSI TIA/EIA/ IS-968-A:2005 (formerly FCC Part 68).
[8] The first number is for the data pair, with the second number for the power pair
[9] The installation and connectors may limit the capability of the protector

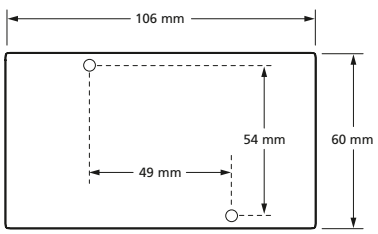

Depth: 24 mm

Fixing centres 49 x 54 mm, M3 clearance

Protection and safety

Data & signal protection

OVR RS485, RS485Q & SL RS485 Series



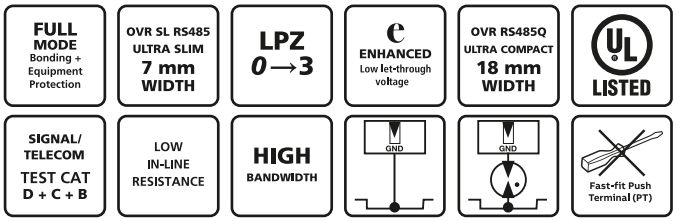

Combined Category D, C, B tested (to IEC/EN 61643) Surge Protection Device (SPD) specifically designed for RS 485 and Fieldbus applications, such as Profibus DP. For use at boundaries up to LPZ 0 protect against flashover (typically the service entrance location) through to LPZ 3. Available as standard OVR RS485 format, or compact OVR RS485Q and Slim Line OVR SL RS485 versions for installations where a high number of lines require protection.

Features & benefits

- Very low let-through voltage (enhanced protection to IEC/BS EN 62305) between all lines - Full Mode protection • Full Mode design capable of handling partial lightning currents as well as allowing continual operation of protected equipment
- Repeated protection in lightning intense environments
- 45 MHz bandwidth greatly exceeds 12 Mbps maximum speeds
- Low in-line resistance minimizes reductions in signal strength
- Suitable for earthed or isolated screen systems
- Built-in DIN rail foot for simple mounting to top hat DIN rails
- Convenient earthing through DIN foot and/or earth terminal
- Connect screen connection ‘S’ as the 0V ground on RS485 systems
- OVR RS485 can be flat mounted on base or side
- OVR RS485 and OVR RS485Q have colour coded terminals for quick and easy installation check
- OVR SL RS485 has ultra slim 7 mm width ideal for compact protection of large numbers of lines (e.g. process control installations)
- OVR SL RS485 includes two stage removable protection module with simple quick release mechanism allowing partial removal for easy line commissioning and maintenance as well as full removal for protection replacement
- OVR SL RS485 includes optional LED status indication. Add L suffix to part number - i.e. OVR SL RS485L
- OVR RS485Q and OVR RS485Q/PT have UL497B approval under file E240341

Application

Connect in series with the signal line either near where it enters or leaves the building or close to the equipment being protected ensuring it is very close to the system’s earth star point. Install SPDs either within an existing cabinet/cubicle or in a separate enclosure.

Accessories

Replacement module for OVR SL RS485:
OVR SLRS485/M
Standard module replacement
OVR SLRS485/B
Base replacement

Combined Mounting/Earthing kits for OVR RS485:
OVR CME 4 For up to 4 x OVR RS485
OVR CME 8 For up to 8 x OVR RS485
OVR CME 16 For up to 16 x OVR RS485
OVR CME 32 For up to 32 x OVR RS485

If protectors cannot be incorporated within an existing panel or enclosure, OVR WBX enclosures are available for up to 4, 8, 16 or 32 protectors and their associated OVR CME kit.

Weatherproof enclosure:
OVR WBX SLQ (OVR SL RS485 and OVR RS485Q)

OVR RS485 installed in series

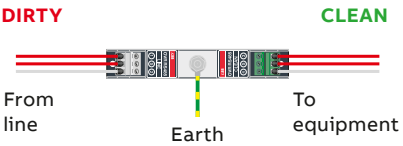

OVR SL RS485 installed in series

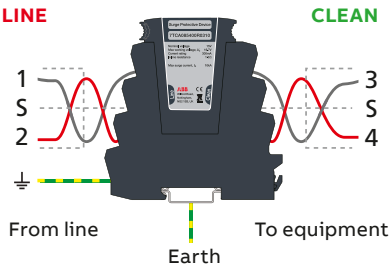

OVR RS485Q installed in series (in-line)

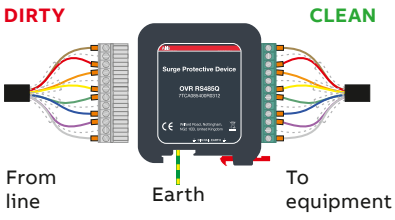

NOTE: The OVR SL ‘Slim Line’ Series is also available for protection of 3-wire and RTD applications (OVR SL/3W & OVR SL RTD).
The OVR SL X Series has approvals for use in hazardous areas.

5

Protection and safety

Data & signal protection

OVR RS485, RS485Q & SL RS485 Series

OVR Q Series - Technical specification

Electrical specification		OVR RS485 Series	OVR SL RS485 Series	OVR RS485Q Series
Nominal voltage[1]		15 V		
Maximum working voltage *U*c (RMS/DC)[2]		11 V / 16.7 V		
Current rating (signal)		300 mA		
In-line resistance (per line ±10%)		1 Ω		
Bandwidth (-3 dB 50 Ω system)		45 MHz		
Transient specification				
Let-through voltage (all conductors)[3] *Up*				
C2 test 4 kV 1.2/50 µs, 2 kA 8/20 µs to BS EN/EN/IEC 61643-21		55.0 V		
C1 test 1 kV, 1.2/50 µs, 0.5 kA 8/20 µs to BS EN/EN/IEC 61643-21		42.0 V		
B2 test 4 kV 10/700 µs to BS EN/EN/IEC 61643-21		27.2 V		
5 kV, 10/700 µs[4]		28.2 V		
Maximum surge current				
D1 test 10/350 µs to BS EN/EN/IEC 61643-21:	– Per signal wire 2.5 kA – Per pair	2.5 kA 5 kA	1.25 kA 2.5 kA	2.5 kA 5 kA
8/20 µs to ITU-T K.45:2003, IEEE C62.41.2:2002:	– Per signal wire – Per pair	10 kA 20 kA		
Mechanical specification				
Temperature range		-40 to +80 ºC		
Connection type		Screw terminal - max. torque 0.5 Nm	Screw terminal - max. torque 0.8 N	Pluggable 12 way screw terminal /PT version: Pluggable 12 way screwless Push Terminal
Conductor size (stranded)		2.5 mm²	4 mm²	2.5 mm²
Earth connection		M6 stud	Via DIN rail or 4 mm² earth terminal - max. torque 0.8 Nm	Via DIN rail or M5 threaded hole in base of unit
Case Material		FR Polymer UL-94 V-0		
Weight: – Unit		0.08 kg	0.08 kg	0.1 kg
Dimensions		See diagrams below		

[1] Nominal voltage (RMS/DC or AC peak) measured at < 10 µA
[2] Maximum working voltage (RMS/DC or AC peak) measured at < 5 mA
[3] The maximum transient voltage let-through of the protector throughout the test (±10%), line to line & line to earth, both polarities. Response time < 10 ns
[4] Test to IEC 61000-4-5:2006, ITU-T (formerly CCITT) K.20, K.21 and K.45,Telcordia GR-1089-CORE, Issue 2:2002, ANSI TIA/EIA/IS-968-A:2002 (formerly FCC Part 68)

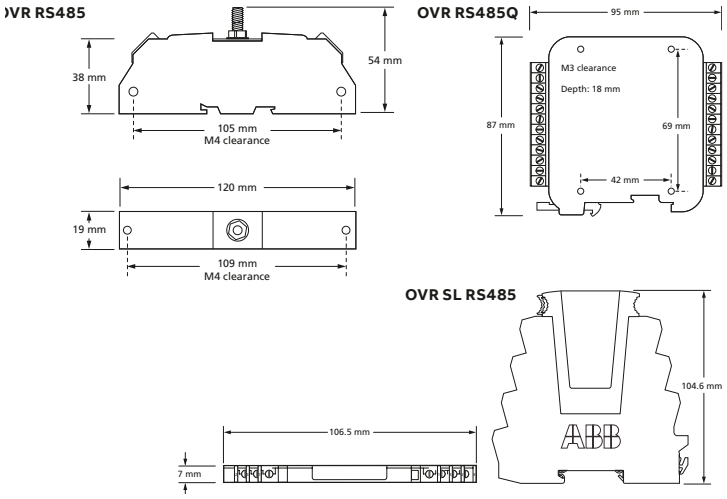

ABB order codes

Part	ABB order code	Part	ABB order code	Part	ABB order code
OVR RS485	7TCA085400R0311	**OVR RS485Q(UL)**	7TCA085400R0572	**OVR CME8**	7TCA085400R0415
OVR SLRS485/B	7TCA085400R0316	**OVR RS485Q/PT(UL)**	7TCA085400R0579	**OVR CME32**	7TCA085410R0046
OVR SLRS485	7TCA085400R0310	**OVR SLRS485/M**	7TCA085400R0317	**OVR WBXSLQ**	7TCA085400R0326
OVR SLRS485L	7TCA085400R0417	**OVR SLRS485L/M**	7TCA085400R0470	**OVR WBXSLQ/G**	7TCA085400R0327
OVR SLRS485(UL)	7TCA085400R0551	**OVR SLRS485L/M(UL)**	7TCA085400R0600	**WBX 4**	7TCA085410R0027
OVR SLRS485L(UL)	7TCA085400R0552	**OVR CME4**	7TCA085400R0414	**WBX 8**	7TCA085410R0030
OVR RS485Q	7TCA085400R0312	**OVR CME16**	7TCA085410R0045	**WBX 16/2/G**	7TCA085410R0020

Protection and safety
Specific systems protection
OVR RF Series



FULL MODE Bonding + Equipment Protection

LPZ 0→3

ENHANCED Low let-through voltage

SIGNAL/ TELECOM TEST CAT D + C + B

HIGH BANDWIDTH

Combined Category D, C, B tested protector (to BS EN 61643) suitable for RF systems using coaxial cables at frequencies between DC and 2.7 GHz and where DC power is present. Suitable for RF systems with power up to 1.9 kW. For use at boundaries up to LPZ 0 to protect against flashover (typically the service entrance location) through to LPZ 3 to protect sensitive electronic equipment.

Features & benefits

- Very low let-through voltage (enhanced protection to IEC/BS EN 62305) between all lines - Full Mode protection
- Full Mode design capable of handling partial lightning currents as well as allowing continual operation of protected equipment
- Repeated protection in lightning intense environments
- Wide bandwidth means a single product is suitable for a range of applications
- Very low attenuation and near unity VSWR over a wide range of frequencies ensure the protectors do not impair system performance
- Available with N, 7/16 DIN and BNC connectors
- Easily mounted and earthed via fixtures on the base of the unit that accept M3 and M5 screws or via mounting brackets
- Additional mounting plates give increased flexibility
- Robust aluminium housing

Application

Use on coaxial cables to protect RF transmitter and receiver systems, including electronics located at the antenna or dish. Typical examples include cell sites, military communications, satellite earth stations, pager systems and emergency services communications systems.

Installation

In a building, connect in series with the coaxial cable near where it enters or leaves the structure, or close to the equipment being protected. This should be as close as possible to the system's earth star point (to enable a good connection to earth). On a mast, connect in series with the coaxial cable near the antenna/dish being protected. Install in a radio communications room, an existing cabinet or a suitable enclosure.

OVR RF 111421 with N female connectors installed in series

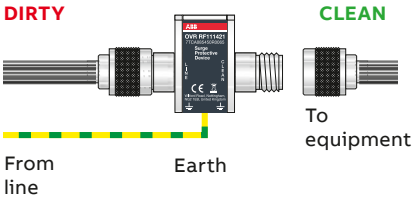

Accessories

OVR RF BK1 Straight mounting plates
OVR RF BK2 90° angled mounting plates
OVR RF BK3 Bulkhead through mounting plate (single)
OVR RF BK4 Bulkhead through mounting plate (for 4 products)
OVR RF GDT-4 Replacement gas discharge tube

NOTE: These protectors are based on a continuous transmission line with a GDT connected between this line and screen/earth, and are suited for applications where DC is required to pass to the equipment. OVR CCTV/B and OVR CCTV/T are suitable for use on coaxial (or twisted pair) CCTV lines.
For coaxial CATV lines, use the OVR CATV/F.

Protection and safety
Specific systems protection
OVR RF Series

OVR RF Series - Technical specification

Electrical specification		OVR RF 111421	OVR RF AA1421	OVR RF 441421
Gas Discharge Tube voltage		350 V		
Maximum working voltage Uc (RMS)		200 V		
Characteristic impedance		50 Ω		
Capacitance (@ 1 MHz)		< 5 pF		
Bandwidth		DC-2.7 GHz		
Voltage standing wave ratio		≤ 1.1		
Insertion loss over bandwidth		≤ 0.1 dB		
Maximum power [1]		650 W		
Transient specification		**OVR RF 111421**	**OVR RF AA1421**	**OVR RF 441421**
Let-through voltage (all conductors) [2] Up				
C2 test 4 kV 1.2/50 µs, 2 kA 8/20 µs to BS EN/EN/IEC 61643-21		< 800 V		
C1 test 1 kV 1.2/50 µs, 0.5 kA 8/20 µs to BS EN/EN/IEC 61643-21		< 650 V		
B2 test 4 kV 10/700 µs to BS EN/EN/IEC 61643-21		< 550 V		
5 kV, 10/700 µs [3]		< 580 V		
Maximum surge current [4]				
D1 test 10/350 µs to BS EN/EN/IEC 61643-21		2.5 kA		
8/20 µs to ITU-T K.45:2003, IEEE C62.41.2:2002		20 kA		
Mechanical specification		**OVR RF 111421**	**OVR RF AA1421**	**OVR RF 441421**
ABB order code		7TCA085450R0065	7TCA085450R0063	7TCA085450R0066
Temperature range		-40 to +80 °C		
Connection type		N female	7/16 DIN female	BNC female
Conductor size (stranded)		Via mounting fixtures		
Case Material		Aluminium body, nickel plated. Brass connectors, white bronze plated		
Weight	– Unit	120 g	190 g	90 g
	– Packaged	140 g	210 g	110 g
Dimensions		See diagram below		

OVR RF BK1 (ABB order code: 7TCA085400R0416)
Straight mounting bracket, 53 x 26.3 x 3 mm
2 x M4 clearance mounting holes, 16.3 mm apart

OVR RF BK2 (ABB order code: 7TCA085400R0064)
90° mounting bracket, 33 x 26.3 x 3 mm, 20 x 26.3 x 3 mm
2 x M4 clearance mounting holes, 16.3 mm apart, 14 mm from fold line

OVR RF BK3 (ABB order code: 7TCA085400R0412)
90° mounting bracket, 50 x 24 x 1.5 mm, 60 x 24 x 1.5 mm
2 x M5 clearance mounting holes, 40 mm apart

OVR RF BK4 (ABB order code: 7TCA085400R0413)
90° quad mounting bracket, 50 x 24 x 1.5 mm, 210 x 24 x 1.5 mm
5 x M5 clearance mounting holes, various spacings
Mounting brackets supplied with screws for fixing to protector

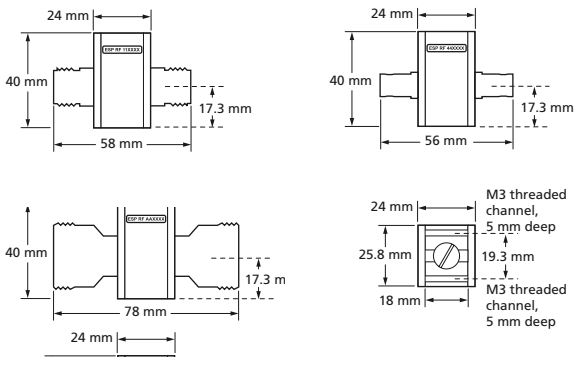

[1] Power levels have been de-rated to allow for real life 'worst case' conditions, calculated with VSWR as 2:1
[2] The maximum transient voltage let-through of the protector throughout the test (±10%) (±10%). Response time < 10 ns. This let-through voltage represents a deviation from the applied signal voltage, present at the time of the test
[3] Test to IEC 61000-4-5:2006, ITU-T (formerly CCITT) K.20, K.21 and K.45, Telcordia GR-1089-CORE, Issue 2:2002, ANSI TIA/EIA/IS-968-A:2002 (formerly FCC Part 68)
[4] The installation and connections external to the protector may limit the capability of the protector

Protection and safety

Specific systems protection
OVR CCTV Series



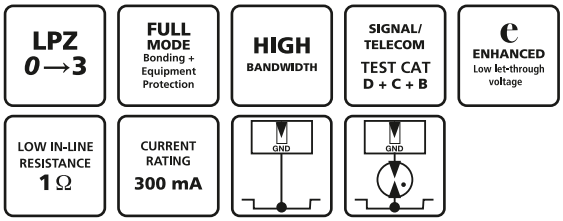

Combined Category D, C, B tested protector (to BS EN 61643) suitable for coaxial CCTV cables with BNC connectors (OVR CCTV/B) or twisted pair CCTV lines (OVR CCTV/T) on systems with either an earthed or an isolated screen. Not suitable for use on broadcast, satellite or cable TV systems. For use at boundaries up to LPZ 0 to protect against flashover (typically the service entrance location) through to LPZ 3 to protect sensitive electronic equipment.

Features & benefits

- Very low let-through voltage (enhanced protection to IEC/BS EN 62305) between all lines - Full Mode protection
- Full Mode design capable of handling partial lightning currents as well as allowing continual operation of protected equipment
- Repeated protection in lightning intense environments
- 100 MHz bandwidth prevents the degradation of high frequency signals
- Low in-line resistance to minimize unnecessary reductions in signal strength and maximizes signalling distance
- Very low reflection coefficient/VSWR ensure that the protector doesn't disrupt system operations
- Suitable for either earthed or isolated screen systems
- Sturdy, conductive ABS housing for 2 way shielding - preventing emissions & providing signals with immunity from external interference
- Convenient holes for flat mounting on base or side
- Built-in DIN rail foot for easy installation on a top hat DIN rail
- OVR CCTV/T has colour coded terminals for a quick and easy installation check - grey for the dirty (line) end and green for the clean end
- Substantial earth stud to enable effective earthing
- Integral earthing plate for enhanced connection to earth via OVR CME kit

Application

Use these protectors on the video cable to outdoor CCTV cameras and central control and monitoring equipment.

Installation

Connect in series with the CCTV cable in a convenient place close to the equipment being protected. For outdoor CCTV cameras, protectors should be mounted in the junction box, or in a separate enclosure, close to the camera. Protect central control and monitoring equipment inside the building by installing protectors on all incoming or outgoing lines, either:

a) near where they enter or leave the building, or

b) close to the equipment being protected (or actually within its control panel).

Accessories

When CCTV protectors are installed in groups, or alongside protectors for signal and mains power lines, these can be mounted and earthed simultaneously on a OVR CME kit. An OVR CME 4 will accommodate the video, telemetry and power protectors to a camera. If protectors cannot be incorporated within an existing panel or enclosure, OVR WBX enclosures are available for up to 4, 8, 16 or 32 protectors and their associated OVR CME kit. The OVR WBX 4/GS is a secure IP66 enclosure suitable for a OVR CME 4 and associated protectors.

Series connection for OVR CCTV/B

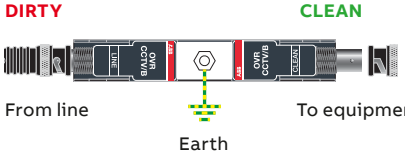

Series connection for OVR CCTV/T

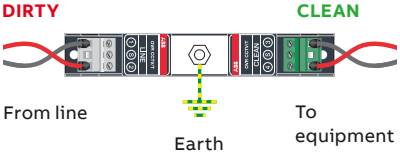

NOTE: Camera telemetry or control lines should be protected with a suitable Lightning Barrier from the OVR D or E Series.
Protectors for the power supply to individual cameras (e.g. OVR 240-16A) and the mains supply to the control room are available.
For coaxial RF (OVR RF Series) cable protectors and CATV systems (OVR CATV/F) are also available.

Protection and safety

Specific systems protection

OVR CCTV Series

OVR CCTV Series - Technical specification

Electrical specification		OVR CCTV/B	OVR CCTV/ B-15V	OVR CCTV/ B-30V	OVR CCTV/ B-50V	OVR CCTV/T	OVR CCTV/T-15V	OVR CCTV/ T-30V	OVR CCTV/ T-50V
ABB order code		7TCA085400R0296	7TCA085400R0297	7TCA085400R0299	7TCA085400R0300	7TCA085400R0301	7TCA085400R0302	7TCA085400R0298	7TCA085400R0303
Nominal voltage [1] (peak-peak)		1 V				2 V			
Maximum working voltage Uc [2] (peak)		7.79 V	16.7 V	36.7 V	56.7 V	7.79 V	16.7 V	36.7 V	56.7 V
Current rating (signal)		300 mA							
In-line resistance (±10%)		1 Ω inserted in coax inner			1 Ω per line				
Bandwidth (-3 dB 75 Ω system) [3]		> 100 MHz							
Voltage standing wave ratio		< 1.2:1							
Transient specification		**OVR CCTV/B**	**OVR CCTV/ B-15V**	**OVR CCTV/ B-30V**	**OVR CCTV/ B-50V**	**OVR CCTV/T**	**OVR CCTV/T-15V**	**OVR CCTV/ T-30V**	**OVR CCTV/ T-50V**
Let-through voltage (all conductors)(4) Up									
C2 test 4 kV 1.2/50 µs, 2 kA 8/20 µs to BS EN/EN/IEC 61643-21		39.5 V	55.0 V	78.0 V	105.0 V	39.5 V	55.0 V	78.0 V	105.0 V
C1 test 1 kV 1.2/50 µs, 0.5 kA 8/20 µs to BS EN/EN/IEC 61643-21		26.0 V	42.0 V	66.5 V	93.5 V	26.0 V	42.0 V	66.5 V	93.5 V
B2 test 4 kV 10/700 µs to BS EN/EN/IEC 61643-21		16.0 V	27.2 V	47.5 V	73.6 V	16.0 V	27.2 V	47.5 V	73.6 V
5 kV, 10/700 µs [5]		17.0 V	28.2 V	49.5 V	76.2 V	17.0 V	28.2 V	49.5 V	76.2 V
Maximum surge current [6]									
D1 test 10/350 µs to BS EN/EN/IEC 61643-21	– Per signal wire	2.5 kA				2.5 kA			
	– Per pair	–				5 kA			
8/20 µs to ITU (formerly CCITT)	– Per signal wire	10 kA				10 kA			
	– Per pair	–				20 kA			
Mechanical specification		**OVR CCTV/B variants**				**OVR CCTV/T variants**			
Temperature range		-40 to +80 °C							
Connection type		Coaxial BNC female				Screw terminal			
Conductor size (stranded)		Not applicable				2.5 mm^2			
Earth connection		M6 stud							
Case Material		ABS UL94 V-0				ABS UL94 V-0			
Weight	– Unit	0.08 kg							
	– Packaged	0.9 kg							
Dimensions		See diagram below							

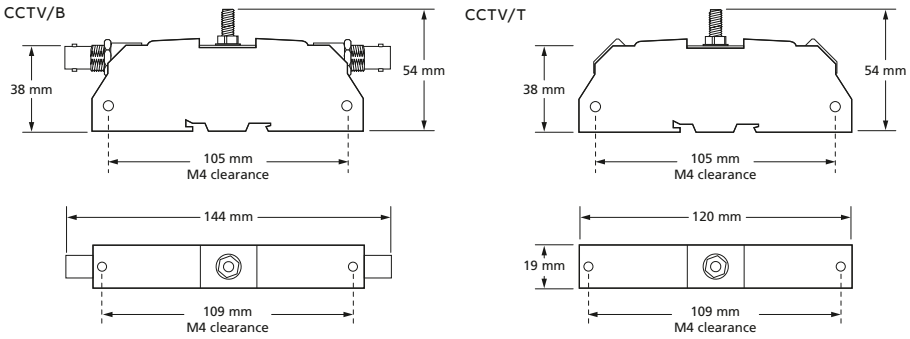

[1] Nominal voltage (DC or AC peak) measured at < 10 µA leakage
[2] Maximum working voltage (DC or AC peak) measured at 5 mA leakage
[3] Capacitance < 30 pF
[4] The maximum transient voltage let-through of the protector throughout the test (±10%), line to line & line to earth. Screen to earth let-through voltage will be up to 600 V (with 5 kV 10/700 test), when protector is configured for use with non-earthed or isolated screen systems. Response time < 10 ns
[5] Test to IEC 61000-4-5:2006, ITU-T (formerly CCITT) K.20, K.21 and K.45,Telcordia GR-1089-CORE, Issue 2:2002, ANSI TIA/EIA/IS-968-A:2002 (formerly FCC Part 68)
[6] The installation and connectors external to the protector may limit the capability of the protector

Protection and safety

Mains power protection

OVR 240-16A



FULL MODE Bonding + Equipment Protection

MAINS TEST TYPE 2 + 3

ENHANCED Low let-through voltage

LPZ 1→3

Combined Type 2 and 3 tested protector (to BS EN 61643) for use on low current (up to 16 A) single phase systems to protect connected electronic equipment from transient overvoltages on the mains supply, e.g. CCTV systems, fire/intruder alarm panels.

Features & benefits

- Very low let-through voltage (enhanced protection to IEC/BS EN 62305) between all sets of conductors (phase to neutral, phase to earth, neutral to earth - Full Mode protection) allowing continuous operation of equipment
- Repeated protection in lightning intense environments
- Compact size for easy incorporation in the protected system
- Removable DIN rail foot for simple clip-on mounting to top hat DIN rails
- Colour coded terminals give a quick and easy installation check - grey for the dirty (line) end and green for the clean end
- Robust housing and substantial earth stud fixing holes ready for flat mounting
- Maintenance free

Application

Use these protectors on low current mains power supplies, e.g. CCTV cameras, alarm panels and telemetry equipment.

Installation

Connect in-line with the power supply usually either within the equipment panel (or for CCTV cameras, in an enclosure close by), or on the fused connection that supplies equipment. To protect equipment inside a building from transients entering on an outgoing feed (e.g. to CCTV cameras or to site lighting) the protector should be installed as close to where the cable leaves the building as possible. Protectors should be installed either within an existing cabinet/cubicle or in a separate enclosure.

Accessories

If several OVR 240-16A protectors are to be installed together, or if one is in use alongside OVR SPDs for video or signal lines, these can be simultaneously mounted and earthed on a OVR CME kit and housed in a suitable OVR WBX enclosure.

Connect in-line on supplies fused up to 16 A. Note how the protector can also be earthed from its earth stud.

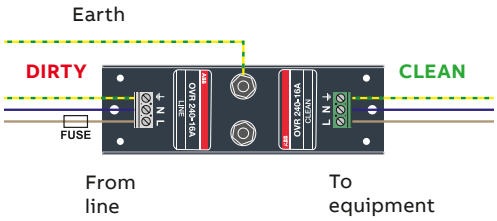

Protection and safety

Mains power protection

OVR 240-16A

OVR 240-16A - Technical specification

Electrical specification		OVR 240-16A
ABB order code		7TCA085460R0361
Nominal voltage - Phase-Neutral Uo (RMS)		240 V
Maximum voltage - Phase-Neutral Uc (RMS)		280 V
Working voltage (RMS)		200-280 V
Frequency range		47-63 Hz
Current rating (supply)		16 A or less
Max. back-up fuse (see installation instructions)		≤ 16 A
Leakage current (to earth)		< 0.5 mA
Transient specification		**OVR 240-16A**
Type 2 (BS EN/EN), Class II (IEC)		
Nominal discharge current 8/20 µs (per mode) In		5 kA
Let-through voltage Up at In [1]		750 V
Maximum discharge current Imax (per mode) [2]		10 kA
Type 3 (BS EN/EN), Class III (IEC)		
Let-through voltage at Uoc of 6 kV 1.2/50 µs and Isc of 3 kA 8/20 µs (per mode) [1, 3]		600 V
Electrical specification		OVR 240-16A
Temperature range		-40 to +80 °C
Connection type		Screw terminal - maximum torque 0.5 Nm
Conductor size (stranded)		4 mm²
Earth connection		Via M6 stud or earth terminal -maximum torque 0.5 Nm
Degree of protection (IEC 60529)		IP20
Case material		Steel
Weight	– Unit	0.23 kg
	– Packaged	0.25 kg
Dimensions		See diagrams below

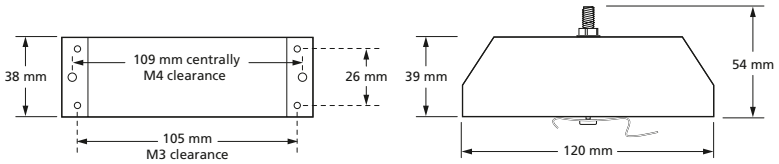

[1] The maximum transient voltage let-through of the protector throughout the test (±10%), phase to neutral, phase to earth and neutral to earth

[2] The electrical system, external to the unit, may constrain the actual current rating achieved in a particular installation

[3] Combination wave test within IEC/BS EN 61643, IEEE C62.41-2002 Location Cats C1 & B3, SS 555:2010, AS/NZS 1768-2007, UL 1449 mains wire-in

Protection and safety

Specific systems protection

OVR TV Series



LPZ 0→3 | FULL MODE Bonding + Equipment Protection | SIGNAL/ TELECOM TEST CAT D + C + B | ENHANCED Low let-through voltage | HIGH BANDWIDTH

Combined Category D, C, B tested protector (to BS EN 61643) suitable to protect Cable, Terrestrial and Satellite TV systems. For use on lines running within buildings at boundaries up to LPZ 0 to through to LPZ 3 to protect sensitive electronic equipment.

Features & benefits

- Very low let-through voltage (enhanced protection to IEC/BS EN 62305) between all lines - Full Mode protection
- Low attenuation and high return loss over a wide range of frequencies ensures the protectors do not impair system performance
- Substantial earth termination
- Supplied ready for flat mounting
- Strong metal housing

Application

Use to protect analogue and digital Cable, Terrestrial and Satellite TV installations. OVR CATV/F, OVR MATV/F, OVR SMATV/F and OVR TV/F are suitable for systems using F connectors. OVR TV/EURO is suitable for systems using EURO-TV connectors.

- For protecting terrestrial antenna feeds use OVR TV/F or OVR TV/EURO
- For protecting satellite feeds use OVR SMATV/F
- For protecting distributed combined TV feeds use OVR MATV/F
- For protecting cable TV feeds use OVR CATV/F

For further information on TV applications, see separate Application Note OVR AN006 (contact us for a copy).

Installation

Connect in series with the coaxial cable either near where it enters or leaves each building or close to equipment being protected.



NOTE: Protectors for coaxial (or twisted pair) CCTV Lines are available. For coaxial RF lines, use the OVR RF Series. Transients can also be conduced into TV systems via the mains power supplies - use suitable OVR mains protection.

Protection and safety

Specific systems protection

OVR TV Series

OVR TV Series - Technical specification

Electrical specification		OVR CATV/F	OVR MATV/F	OVR SMATV/F	OVR TV/F	OVR TV/EURO
ABB order code		7TCA085400R0293	7TCA085400R0308	7TCA085400R0336	7TCA085400R0335	7TCA085400R0334
Maximum working voltage(1)		140 V	18.9 V	18.9 V	6.4 V	6.4
Maximum operating current		4 A	800 mA	800 mA	300 mA	300 mA
Characteristic impedance		75 Ω				
Bandwidth		5-860 MHz	5-3224 MHz	860-3224 MHz	5-860 MHz	5-860 MHz
Insertion loss	– 5-860 MHz	< 0.5 dB	< 0.3 dB	–	< 0.3 dB	< 0.3 dB
	– 860-2150 MHz	–	< 1.5 dB	< 1.5 dB	–	–
	– 2150-3224 MHz	–	< 2.2 dB	< 2.2 dB	–	–
Return loss (VSWR)	– 5-860 MHz	> 20 dB (< 1.2:1)	> 32 dB (< 1.05:1)	–	> 32 dB (< 1.05:1)	> 32 dB (< 1.05:1)
	– 860-2150 MHz	–	> 20 dB (< 1.2:1)	> 20 dB (< 1.2:1)	–	–
	– 2150-3224 MHz	–	< 2.2 dB	< 2.2 dB	–	–
Transient specification		**OVR CATV/F**	**OVR MATV/F**	**OVR SMATV/F**	**OVR TV/F**	**OVR TV/EURO**
Let-through voltage (all conductors)(2) Up						
C2 test 4 kV 1.2/50 µs, 2 kA 8/20 µs to BS EN/EN/IEC 61643-21		270 V	70 V	70 V	65 V	65 V
C1 test 1 kV 1.2/50 µs, 0.5 kA 8/20 µs to BS EN/EN/IEC 61643-21		265 V	60 V	60 V	50 V	50 V
B2 test 4 kV 10/700 µs to BS EN/EN/IEC 61643-21		245 V	45 V	45 V	30 V	30 V
5 kV, 10/700 µs(3)		250 V	50 V	50 V	35 V	35 V
Maximum surge current						
8/20 µs to ITU-T K.45:2003, IEEE C62.41.2:2002		3 kA				
D1 test 10/350 µs to BS EN/EN/IEC 61643-21		500 A	750 A	750 A	750 A	750 A
Mechanical specification		**OVR CATV/F**	**OVR MATV/F**	**OVR SMATV/F**	**OVR TV/F**	**OVR TV/EURO**
Temperature range		-40 to +80 ºC				
Connection type		F female				Euro-TV
Earth connection		~ 9.5 mm (3/8”) diameter earth stud				
Case Material		Diecast				
Weight	– Unit	0.14 kg				
	– Packaged	0.15 kg				
Dimensions		See diagram below				

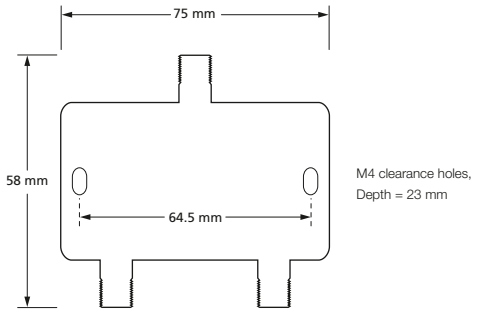

(1) Maximum working voltage (DC or AC peak) measured at < 5 µA (OVR CATV/F) and < 50 mA (OVR MATV/F, OVR SMATV/F, OVR TV/EURO, OVR TV/F)

(2) The maximum transient voltage let-through of the protector throughout the test (±10%) line to earth. Response time < 10 ns

(3) Test to IEC 61000-4-5:2006, ITU-T (formerly CCITT) K.20, K.21 and K.45,Telcordia GR-1089-CORE, Issue 2:2002, ANSI TIA/EIA/IS-968-A:2002 (formerly FCC Part 68)

Protection and safety

Protector accessories

OVR WBX Series



OVR WBX Series

OVR WBX Series

A range of moisture and dirt resistant enclosures for the convenient installation of any OVR protector. For signalling applications they can be used with their associated OVR CME with grey base and either a see-through or grey (part number/G or/GS) lid.

Features & benefits

- Tough polycarbonate enclosures
- Weatherproof with IP resistance to dirt and water of IP56 or more
- Clear lid enables easy visual inspection of the protector's visual status indication (OVR WBX 4, OVR WBX 8)
- Grey lid for applications not needing regular protector inspection (OVR WBX 4/GS, OVR WBX 8/GS and OVR WBX 16/2/G)
- For external CCTV and other installations requiring added security the OVR WBX 4/GS and OVR WBX 8/GS are supplied with an opaque lid and special secure head screws (plus tool)
- Supplied complete with metal base (mounting) plate with pre-prepared mounting positions and fixing hardware for easy installation

Application

Use OVR WBX enclosures when your OVR protector(s) can't be installed within the existing equipment panel or enclosure and for added protection in damp and dirty environments.

Installation

The protector(s), or OVR CME kit, are mounted on the metal base plate, which in turn mounts in the enclosure.

OVR WBX Series - Technical specification

Enclosure part no.	**For use with following protectors**
OVR WBX 4 or the secure OVR WBX 4/GS	1 OVR CME 4 and associated protectors
OVR WBX 8 or the secure OVR WBX 8/GS	1 OVR CME 8 and associated protectors
OVR WBX 16/2/G	1 or 2 OVR CME 16 and associated protectors
OVR WBX SLQ or OVR WBX SLQ/G	Up to 6 x OVR**Q, or up to 15 x OVR SL**

		OVR WBX 4 OVR WBX 4/GS	**OVR WBX 8 OVR WBX 8/GS**	**OVR WBX 16/2/G**	**OVR WBX SLQ OVR WBX SLQ/G**
ABB Order Code		7TCA085410R0048 7TCA085410R0049	7TCA085410R0050 7TCA085410R0051	7TCA085410R0047	7TCA085400R0326 7TCA085400R0327
Weight	– Unit	0.9 kg	1.3 kg	6.4 kg	0.7 kg
	– Packaged	0.95 kg	1.35 kg	7.6 kg	1.0 kg
Dimensions					
Length	– Internal	246 mm	225 mm	460 mm	230 mm
	– External	255 mm	235 mm	474 mm	250 mm
Width	– Internal	171 mm	225 mm	380 mm	105 mm
	– External	180 mm	235 mm	396 mm	125 mm
Depth	– Internal	119 mm	100 mm	120 mm	110 mm
	– External	125 mm	117 mm	128 mm	125 mm
Fixing centres (mm)		240 x 165	215 x 215	380 x 310	235 x 110
IP rating		IP66	IP66	IP56	IP67
Temperature range		-15 to +75 °C	-15 to +75 °C	-25 to +60 °C	-40 to +80 °C
Flammability		UL 94 V2	UL 94 V2	UL 94 V0	UL 746C 5V

Protection and safety

Protector accessories

OVR CME Series



OVR CME Series

OVR CME Series

Enables groups of protectors to be simultaneously mounted and earthed via their earth stud. Suitable for installing protectors with one or two earth studs on their top face. Available with 4, 8, 16 and 32 mounting holes.

Features & benefits

- Enables quick and easy installation of protectors for added convenience
- Speedy installation of groups of protectors saves time and money
- Individual protectors can be changed without needing to remove others
- Sturdy construction
- Supplied with a choice of flat and round ended fixing screws to suit your application

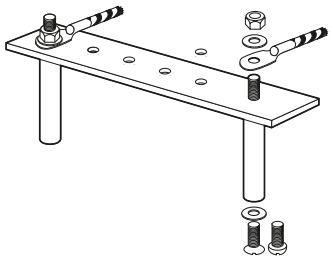

Assembly of OVR CME kit
Earth connection (not supplied)

Application

Use OVR CME kits to simultaneously mount and earth groups of single and double earth stud protectors. Each single earth stud protector requires one OVR CME mounting position and each double earth stud protector requires two OVR CME mounting positions, this includes:

- High conductivity copper with electro-tin plating and nylon insulating pillars, for low impedance to earth

Single earth stud protectors which are:

– OVR 06D	– OVR 06E	– OVR 06H	– OVR TN
– OVR 15D	– OVR 15E	– OVR 15H	– OVR RTD
– OVR 30D	– OVR 30E	– OVR 30H	– OVR CCTV/B
– OVR 50D	– OVR 50E	– OVR 50H	– OVR CCTV/T
– OVR 110D	– OVR 110E	– OVR 110H	– OVR RS485

Double earth stud protectors which are:

– OVR 240-16A

Once you know how many OVR CME mounting positions you require choose a OVR CME kit to suit:

– OVR CME 4 has 4 mounting positions
– OVR CME 8 has 8 mounting positions
– OVR CME 16 has 16 mounting positions
– OVR CME 32 has 32 mounting positions

Accessories

Enclosures suitable for a OVR CME 4 and its associated protectors: **(OVR WBX 4/GS)**, **OVR CME 8** and protectors **(OVR WBX 8/GS)** or one or two **OVR CME 16** and protectors **(OVR WBX 16/2/G)**

Installation

The earth bar is supported by a series of mounting pillars (which are fixed to the cubicle or box base). Protectors are attached to the OVR CME's earth bar via their earth stud(s) and earthed with shared connections to earth. We suggest one earth connection per mounting pillar.

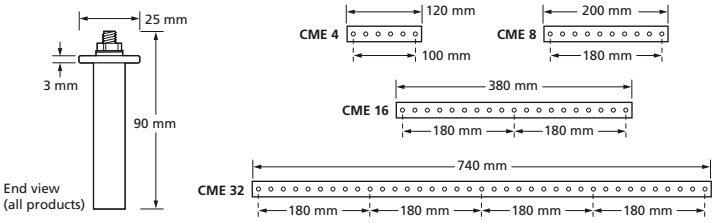

OVR CME Series - Technical specification

	OVR CME 4	OVR CME 8	OVR CME 16	OVR CME 32
ABB order code	7TCA085400R0414	7TCA085400R0415	7TCA085410R0045	7TCA085410R0046
Hole size	6.5 mm with 20 mm spacings			
Weight	0.1 kg	0.15 kg	0.3 kg	0.6 kg
Dimensions	See diagram opposite			

Protection and safety

Protector accessories

Accessories



Slim Line replacement base/module

Slim Line replacement base/module

Replacement: Base & module for the Slim Line Series of protectors

Part no. ABB Order Code	Description
Slim Line protector replacement base	
OVR SL/B 7TCA085400R0320	For use with standard and 4-20 mA Slim Line Series
OVR SL/I/B 7TCA085400R0321	Isolated screen version for use with standard and 4-20 mA Slim Line Series
OVR SLX/B 7TCA085400R0325	For use with Slim Line Intrinsically Safe (ATEX) Series
OVR SLX/I/B 7TCA085400R0374	Isolated screen version for use with Slim Line Intrinsically Safe (ATEX) Series
OVR SL/3W/B 7TCA085400R0319	For use with Slim Line 3-wire Series
OVR SLRTD/B 7TCA085400R0318	For use with Slim Line RTD Series
OVR SL RS485/B 7TCA085400R0316	For use with Slim Line RS485 Series
Slim Line protector replacement module	
OVR SLXX/M	For use with Slim Line Series - replace 'XX' with relevant voltage, i.e. 06, 15, 30, 50, 110
OVR SL06/M (7TCA085400R0375), OVR SL15/M (7TCA085400R0376), OVR SL30/M (7TCA085400R0377), OVR SL50/M (7TCA085400R0378), OVR SL110/M (7TCA085400R0379)	
OVR SLTN/M 7TCA085400R0324	For use with Slim Line TN Series
OVR SL15X/M 7TCA085400R0380	For use with Slim Line Instrinsically Safe (ATEX) Series, 15 V
OVR SL30X/M 7TCA085400R0381	For use with Slim Line Instrinsically Safe (ATEX) Series, 30 V
OVR SLRTD/M 7TCA085400R0322	For use with Slim Line RTD Series
OVR SLRS485/M 7TCA085400R0317	For use with Slim Line RS485 Series
Slim Line LED protector replacement module	
OVR SLXXL/M	For use with Slim Line LED Series - replace 'XX' with relevant voltage, i.e. 06, 15, 30, 50, 110
OVR SL06L/M (7TCA085400R0399), OVR SL15L/M (7TCA085400R0411), OVR SL30L/M (7TCA085400R0400), OVR SL50L/M (7TCA085400R0401), OVR SL110L/M (7TCA085400R0402)	
OVR SL30L/4-20/M 7TCA085400R0373	For use with Slim Line LED Series, 4-20 mA
OVR SL15XL/M 7TCA085400R0404	For use with Slim Line Instrinsically Safe (ATEX) LED Series, 15 V
OVR SL30XL/M 7TCA085400R0403	For use with Slim Line Instrinsically Safe (ATEX) LED Series, 30 V
OVR SLXX/3W/M	For use with Slim Line 3-wire LED Series – replace 'XX' with relevant voltage, i.e. 06, 15, 30, 50, 110
OVR SL06/3W/M (7TCA085400R0405), OVR SL15/3W/M (7TCA085400R0406), OVR SL30/3W/M (7TCA085400R0407), OVR SL50/3W/M (7TCA085400R0409), OVR SL110/3W/M (7TCA085400R0408)	
OVR SLTNL/M 7TCA085400R0468	For use with Slim Line TN LED Series



OVR RF mounting plates

OVR RF mounting plates

Use with: Any ESP RF protector to assist installation

Part no. ABB Order Code	Description
OVR RF BK1 7TCA085400R0416	Straight Mounting plate
OVR RF BK2 7TCA085450R0064	90º Mounting plate
OVR RF BK3 7TCA085400R0412	Bulkhead through mounting plate (single)
OVR RF BK4 7TCA085400R0413	Bulkhead through mounting plate (4 protectors)



OVR RF GDT-4

OVR RF GDT-4

Replacement: Gas Discharge Tubes for use with standard RF protectors

Part no. ABB Order Code	Description	Voltage
OVR RF GDT-4 7TCA085400R0309	Gas Discharge Tube	350 V



Cable assembly

Use with: OVR ISDN/RJ45-*/8 or OVR Cat-5e or OVR Cat-6 protector range

Part no. ABB Order Code	Description	Length
OVR CAT5e/UTP-1 7TCA085400R0294	Cable assembly for OVR Cat-5e with unshielded RJ45 connections	1 m
OVR CAT6/STP-2 7TCA085400R0295	Cable assembly for OVR Cat-6 with shielded RJ45 connections	2 m

Cable assembly with RJ45 connections for the OVR ISDN/RJ45-4/8 or OVR ISDN/RJ45-8/8 plug-in ISDN protectors for use if the standard 0.5 m cable is insufficient

Notes

E 90. Uncompromising performance

A safe and smart range designed for quick, flexible and error-proof installation

Compactness
The compact dimensions enable to close the switchboard door even when the fuse holder is open, thus ensuring total safety during maintenance.

Reliability
Venting grooves and cooling chambers improve heat dissipation even in multiple-pole configurations.

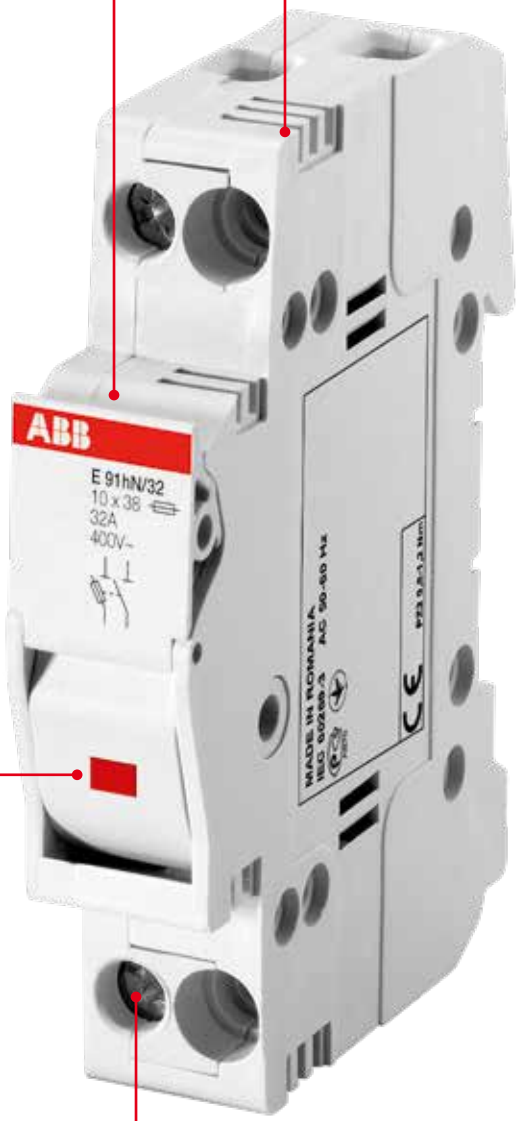

Completeness
The fuse tripping can be easily displayed, thanks to the special blown fuse indicator light.

Universal use
Screw holes have increased diameter to accomodate insulated screwdrivers and electric screwdrivers.

E 90. Uncompromising performance

A safe and smart range designed for quick, flexible and error-proof installation



Fuseholder profile has been designed for maximum ease of use: the 90° flip hinge with ergonomic knob, makes the replacement of fuses easier even in small spaces or when wearing protective gloves.



The compact dimensions enable to close the switchboard door even when the fuseholder is open, thus ensuring total safety during maintenance.



With the Prozidriv PZ2 screws tightening can be performed by exerting less torque than conventional screws, and the same electric screwdriver can be used for all terminals. Moreover, the PS connection busbars facilitate the connecting operations, making the wiring both simple and safe and providing complete integration with S 200 and SN 201 System pro M compact® circuit-breakers.



Venting grooves and cooling chambers improve heat dissipation even in multiple-pole configurations.
The reduced operating temperature inside fuseholders ensures durability and reliability of the devices over time.

Protection and safety

E 90 fuse switch disconnectors



E 90

Technical features

Type			E 90/20	E 90/32
Rated current		A	20	32
Type of current			AC	
Fuse		[mm]	8 x 31	10 x 38
Max power dissipation accepted		[W]	2.5	3
Rated frequency		[Hz]	50-60	
Tightening torque		[Nm]	PZ2 2-2.5*	
Protection degree			IP20	
Rated insulation voltage		[kV]	1	
Terminals cross-section		[mm²]	25	
Cross-section rigid copper conductors	1 wire		1.5-25 mm² (16-10 AWG)	
	2 wires		-	5 mm² (10 AWG)
Cross-section stranded copper conductors	1 wire		1.5-16 mm² (16-3 AWG)	
	2 wires		-	2-5 mm² (14-10 AWG)
Operating temperature		[°C]	-5/+40 (1)	
Storage temperature		[°C]	-25/+70 (2)	
Altitude		[m]	2000	
Degree of relative humidity at temperature °C			max. 90% with temp. +20 °C 50% with max. temp. +40 °C	
Voltage range for LED indicator light			24-1000 AC/DC (only s version)	
Padlockable (when open)			■	■
Sealable (when closed)			■	■
IEC 60947-3				
Utilization category			AC-22B	AC-22B
Markings		[V]	400	400

(1) for lower temperature verify fuse technical characteristics, for higher temperature refer to derating table in Chapter 5 of Electrical installation solutions for buildings - Technical details
(2) for more than 24h max temperature is +55 °C
** PZ2 2.8 Nm in case of rigid copper conductors, 2 wires

Shock and vibration

Vibration withstand on the 3 main axis:

- Sinusoidal vibration testing according to IEC 60068-2-6: 2 to 13 Hz x = 1 mm peak; 13 to 100 Hz y = 0.7 g peak
- Random vibration testing according to IEC 61373: Category 1 Class B

Shock withstand

- Shock testing according to IEC 60068-2-27 : 15 g/11 ms/18 shocks
- Shock testing according to IEC 61373: Category 1 Class B

Materials

Plastic parts	**Case:**	**Material PA 6 +30% glass fibre**
		Self extinguishing class: V2 (UL94)
		Temperature resistance: 130 °C
	Opening handle	**Material PA 66 +25% glass fibre**
		Self-extinguishing class V0 (UL94)
		Temperature resistance: 140 °C
Metal parts	**Clips**	**Silver plated copper**
	Clip spring	**Stainless steel**
	Terminals	**Galvanized steel**

The E 90 series is environmental friendly and protects the health of people: all used materials are conform to the RoHS and REACH directives and they completely exclude hazardous substances and halogen.

Protection and safety

E 90 fuse switch disconnectors



E 92



E 94

E 90 fuse switch disconnectors

E 90 series fuse switch disconnectors are designed for switching circuits under load, providing protection against short circuits and overloads. The case is made of self-extinguishing thermoplastic material resistant to high temperatures (all materials are UL listed) while the contact clips are in silver plated copper.

E 90 fuse switch disconnectors can be sealed or padlocked to ensure operator safety during maintenance. Versions with blown fuse indicator allow to check whether the fuse is still working correctly or not. For easy and quick installation E 90 range is totally compatible with connecting bars, terminals and caps of S 200 MCBs.

Thanks to cURus approval, they can be installed in UL certified machines.

E 90 fuse switch disconnectors for 10.3 x 38 mm fuses (AC-22B)

Poles	Rated current	Modules	Bbn 8012542	Order details		Price 1 piece	Weight 1 piece	Pack unit
	In		EAN	Type code	Order code		kg	pc.
1	32	1	009238	E 91/32	2CSM200923R1801		0.061	6
1	32	1	024835	E 91/32s	2CSM202483R1801		0.062	6
1+N	32	2	008934	E 91N/32	2CSM200893R1801		0.130	3
1+N	32	2	515036	E 91N/32s	2CSM251503R1801		0.132	3
2	32	2	008835	E 92/32	2CSM200883R1801		0.122	3
2	32	2	514930	E 92/32s	2CSM251493R1801		0.132	3
3	32	3	047537	E 93/32	2CSM204753R1801		0.183	2
3	32	3	020639	E 93/32s	2CSM202063R1801		0.184	2
3+N	32	4	047339	E 93N/32	2CSM204733R1801		0.252	1
3+N	32	4	514831	E 93N/32s	2CSM251483R1801		0.255	1
4	32	4	047230	E 94/32	2CSM204723R1801		0.244	1
4	32	4	020530	E 94/32s	2CSM202053R1801		0.248	1

s: version with blown fuse indicator light

E 90 fuse switch disconnectors for 8.5 x 31.5 mm fuses (AC-22B)

Poles	Rated current	Modules	Bbn 8012542	Order details		Price 1 piece	Weight 1 piece	Pack unit
	In		EAN	Type code	Order code		kg	pc.
1	20	1	009832	E 91/20	2CSM200983R1801		0.061	6
1	20	1	024231	E 91/20s	2CSM202423R1801		0.062	6
2	20	2	009535	E 92/20	2CSM200953R1801		0.122	3
2	20	2	896234	E 92/20s	2CSM289623R1801		0.062	3
3	20	3	009436	E 93/20	2CSM200943R1801		0.183	2
3	20	3	896135	E 93/20s	2CSM289613R1801		0.184	2

s: version with blown fuse indicator light

Protection and safety
E 90h fuseholders



E 91hN



E 93hN



Fuse indicator LED

Technical features

Type		E 90hN/20	E 90hN/32
Rated currrent	[A]	20	32
Type of current		AC	
Fuse	[mm]	8 x 31	10 x 38
Max power dissipation accepted	[W]	2.6	3.2
Rated frequency	[Hz]	50-60	
Tightening torque	[Nm]	PZ2 0.8-1.2	
Protection degree		IP20	
Rated insulation voltage	[kV]	1	
Terminals cross-section	[mm²]	16	
Cross-section rigid copper conductors	[mm²]	1.5-16	
Cross-section stranded copper conductors	[mm²]	1.5-10	
Operating temperature	[°C]	-5/+40 (1)	
Storage temperature	[°C]	-25/+70 (2)	
Altitude	[m]	2000	
Degree of relative humidity at temperature °C		max. 90% with temp. +20 °C 50% with max. temp. +40 °C	
Voltage range for LED indicator light		24-1000 AC/DC (only s version)	
Padlockable (when open)		■	
Sealable (when closed)		■	
IEC 60269-3			
Rated voltage	[V]	400	

(1) for lower temperature verify fuse technical characteristics, for higher temperature refer to derating table in Chapter 5 of Electrical installation solutions for buildings - Technical details
(2) for more than 24h max temperature is +55 °C

E 90h fuseholders

E 90h fuseholders are suitable for protection against overloads and short circuits. Available in a single module 1P+N version and in a three-module 3P+N version, they are designed for use with gG and aM cylindrical fuse links. The body is made from self-extinguishing material resistant to high temperatures, while the contact clips are in silver-plated copper. E 90h fuseholders can be sealed or padlocked to assure operator safety during maintenance. Versions with blown fuse indicator allow to check whether the fuse is still working correctly or not.

E 90h fuseholders for 10.3 x 38 mm fuses

Poles	Rated current	Modules	Bbn 8012542	Order details		Price 1 piece	Weight 1 piece	Pack unit
	In		EAN	Type code	Order code		kg	pc.
1+N	32	1	009139	E 91hN/32	2CSM200913R1801		0.070	6
1+N	32	1	065739	E 91hN/32s	2CSM206573R1801		0.071	6
3+N	32	3	047438	E 93hN/32	2CSM204743R1801		0.192	2
3+N	32	3	743439	E 93hN/32s	2CSM274343R1801		0.200	2

s: version with blown fuse indicator light

E 90h fuseholders for 8.5 x 31.5 mm fuses

Poles	Rated current	Modules	Bbn 8012542	Order details		Price 1 piece	Weight 1 piece	Pack unit
	In		EAN	Type code	Order code		kg	pc.
1+N	20	1	009634	E 91hN/20	2CSM200963R1801		0.070	6
1+N	20	1	007036	E 91hN/20s	2CSM200703R1801		0.071	6
3+N	20	3	009337	E 93hN/20	2CSM200933R1801		0.192	2
3+N	20	3	896036	E 93hN/20s	2CSM289603R1801		0.200	2

s: version with blown fuse indicator light

Protection and safety

E 90 PV fuse disconnectors



E 90 PV

Technical features

Type		E 90/32 PV	E 90/32 PV according to UL
Rated current	[A]	32	30
Type of current		DC	
Fuse	[mm]	10 x 38	
Max power dissipation accepted	[W]	3	
Rated frequency	[Hz]	-	
Tightening torque		PZ2 2-2.5 Nm	PZ2 18-22 lb-in
Protection degree		IP20	
Rated insulation voltage	[kV]	1	
Terminals cross-section	[mm²]	25	
Cross-section rigid copper conductors		1.5 - 25 mm²	n..a.
Cross-section stranded copper conductors		1.5 - 16 mm²	8÷3 AWG
Operating temperature	[°C]	-5/+40 (1)	
Storage temperature	[°C]	-25/+70 (2)	
Altitude	[m]	2000	
Degree of relative humidity at temperature °C		max. 90% with temp. +20 °C 50% with max. temp. +40 °C	
Voltage range for LED indicator light		24-1000 AC/DC (only s version)	
Can be padlocked (open)		■	
Can be sealed (closed)		■	
IEC 60947-3			
Utilization category		DC-20B	
Rated voltage	[V]	1000	

(1) for lower temperature verify fuse technical characteristics, for higher temperature refer to derating table in Chapter 5 of Electrical installation solutions for buildings - Technical details
(2) for more than 24h max temperature is +55 °C

E 90 PV fuse disconnectors

E 90 PV series fuse disconnectors, designed for operating voltages of 1000 V DC with utilization category DC-20B, are particularly suited for protection against overcurrents of photovoltaic systems.The single-pole or two-pole E 90 PV disconnectors for 10.3 x 38 mm cylindrical fuse links offer a reliable, compact and affordable solution for photovoltaic installations. Versions with blown fuse indicator allow to check whether the fuse is still working correctly or not.

E 90 PV fuse disconnectors for 10.3 x 38 mm fuses (DC-20B)

Poles	Rated current	Modules	Bbn 8012542	Order details		Price 1 piece	Weight 1 piece	Pack unit
	In		EAN	Type code	Order code		kg	pc.
1	32	1	047131	E 91/32 PV	2CSM204713R1801		0.061	6
1	32	1	046936	E 91/32s PV	2CSM204693R1801		0.062	6
2	32	2	047032	E 92/32 PV	2CSM204703R1801		0.122	3
2	32	2	569138	E 92/32s PV	2CSM256913R1801		0.233	3

s: version with blown fuse indicator light

Protection and safety

E 90 PV 1500 fuse holder



E 90 PV 1500

Technical features

Type		E90/32 PV1500
Reference standards	-	IEC 60269-1,-2,-6 UL 4248-19
Rated current	[A]	32 (acc. IEC) / 30 (acc. UL)
Rated operational voltage	[V]	1500 V DC
Fuse size	[mm]	10×85 and 10/14×85
Max. power dissipation accepted	[W]	6
Tightening torque	[Nm]	PZ2 2-2.5 Nm (PZ2 18-22 lb-in)
Protection degree	-	IP20
Rated insulation voltage	[kV]	1
Cross section rigid copper conductors (1 wire)	[mm²]	16-10 AWG
Cross section stranded copper conductors (1 wire)	[mm²]	0.75 – 25 (18-4 AWG)
Cable temperature	[°C]	max 90 (acc. UL)
Operating temperature	[°C]	> -5
Storage temperature	[°C]	> -25
Degree of relative humidity at temperature °C		max. 90% with temp. +20 °C 50% with max. temp. +40 °C
Approvals	-	UL , CCC

E 90 PV fuse holder

The E 90 PV 1500 series of fuse holders has been designed for applications up 1500 V DC. Thanks to their rated voltage up to 1500 V DC they are the ideal solution for protecting cells and inverters. In case of maintenance, they ensure isolation of circuits and strings up to 1500 V in direct current, in total safety. The main features of E 90 PV 1500 fuse holders include venting grooves and cooling chambers which improved heat dissipation.

E 90 PV fuse holder for 10 × 85 mm and 10/14 × 85 mm fuses

Poles	Rated current	Width	Bbn 8012542	Order details		Price 1 piece	Weight 1 piece	Pack unit
	In		EAN	Type code	Order code		kg	pc.
1	32	22.5	020417	E91/32 PV1500e	2CSM202041R1801		0.080	5
1	32	22.5	743613	E91/32 PV1500e	2CSM274361U1801		0.080	60

Protection and safety

E 90 50/125 fuse disconnectors



E 90 50/125

Technical features

Type		E 90/50	E 90/125
Rated current	[A]	50	100*
Type of current		AC	
Fuse	[mm]	14 x 51	22 x 58
Max power dissipation accepted	[W]	5	9.5
Rated frequency	[Hz]	50-60	
Tightening torque	[Nm]	PZ2 3-3.5	PZ2 3.5-4
Protection degree		IP20**	
Rated insulation voltage	[kV]	1	
Terminals cross-section	[mm²]	35	50
Cross-section rigid copper conductors	[mm²]	2.5 - 35	4 - 50
Cross-section stranded copper conductors	[mm²]	2.5 - 25	4 - 35
Operating temperature	[°C]	-5/+40 (1)	
Storage temperature	[°C]	-25/+70 (2)	
Degree of relative humidity at temperature °C		max. 90% with temp. +20 °C 50% with max. temp. +40 °C	
Can be sealed closed		■	■
Can be padlocked open		■	■
IEC 60947-3			
Utilization category		AC-20B	
Rated voltage	[V]	690	

* 125A with fuses of type aM and in combination with a device which guarantees protection against overload
** The protection degree IP20 is obtained also as standalone unit with respect to wire size of 10mm²
(1) for lower temperature verify fuse technical characteristics, for higher temperature refer to derating table in Chapter 5 of Electrical installation solutions for buildings - Technical details
(2) for more than 24h max temperature is +55 °C

E90 50/125 fuse disconnectors

The E 90 50/125 fuse disconnector range is specifically intended for industrial circuit protection when currents are from 50 A to 125 A. They can, respectively, carry any type of cylindrical fuses 14x51 and 22x58 mm. The E 90 50/125 fuseholders can be sealed or padlocked in open position to ensure operator safety during maintenance operations. Versions with blown fuse indicator (LED) allow checking whether the fuse is still working correctly or not.

E 90/50 fuse disconnectors for 14 x 51 mm fuses (AC-20B)

Poles	Rated current In	Modules	Bbn 8012542 EAN	Order details		Price 1 piece	Weight 1 piece kg	Pack unit pc.
				Type code	Order code			
1	50	1.5	790228	E 91/50	2CSM279022R1801		0.095	4
1	50	1.5	372028	E 91/50s	2CSM237202R1801		0.095	4
1+N	50	3	779827	E 91N/50	2CSM277982R1801		0.19	2
1+N	50	3	023920	E 91N/50s	2CSM202392R1801		0.19	2
2	50	3	779728	E 92/50	2CSM277972R1801		0.19	2
2	50	3	070320	E 92/50s	2CSM207032R1801		0.19	2
3	50	4.5	779629	E 93/50	2CSM277962R1801		0.285	1
3	50	4.5	574828	E 93/50s	2CSM257482R1801		0.285	1
3+N	50	6	779520	E 93N/50	2CSM277952R1801		0.38	1
3+N	50	6	563020	E 93N/50s	2CSM256302R1801		0.38	1

E 90/125 fuse disconnectors for 22 x 58 mm fuses (AC-20B)

Poles	Rated current In	Modules	Bbn 8012542 EAN	Order details		Price 1 piece	Weight 1 piece kg	Pack unit pc.
				Type code	Order code			
1	100	2	775720	E 91/125	2CSM277572R1801		0.135	4
1	100	2	896326	E 91/125s	2CSM289632R1801		0.135	4
1+N	100	4	773528	E 91N/125	2CSM277352R1801		0.27	2
1+N	100	4	049425	E 91N/125s	2CSM204942R1801		0.27	2
2	100	4	771326	E 92/125	2CSM277132R1801		0.27	2
2	100	4	049326	E 92/125s	2CSM204932R1801		0.27	2
3	100	6	775027	E 93/125	2CSM277502R1801		0.405	1
3	100	6	049227	E 93/125s	2CSM204922R1801		0.405	1
3+N	100	8	965329	E 93N/125	2CSM296532R1801		0.54	1
3+N	100	8	049128	E 93N/125s	2CSM204912R1801		0.54	1

s: version with blown fuse indicator light

Protection and safety
E 90 CC fuseholders



E 91



E 93

Technical features

Type			E 90/30 CC
Rated voltage		[V]	600
Rated current		[A]	30
Type of current			AC/DC
Rated frequency		[Hz]	60
Fuse			class CC
Rated insulation voltage		[kV]	1 + 2*U_n
Tightening torque		[Nm]	PZ2 2-2.5*
		[lb-in]	PZ2 18-22**
Terminals cross-section		[mm²]	25
Cross-section rigid copper conductors	1 wire		1.5-25 mm² (16-10 AWG)
	2 wires		5 mm² (10 AWG)
Cross-section stranded copper conductors	1 wire		1.5-16 mm² (16-3 AWG)
	2 wires		2-5 mm² (14-10 AWG)
Operating temperature		[°C]	-5/+40 (1)
Storage temperature		[°C]	-25/+70 (2)
Voltage range for LED indicator light (only s version)		[V]	24 - 1000 AC/DC
Degree of relative humidity at temperature °C			< 60%
Can be sealed closed			■
Can be padlocked open			■

* PZ2 2.8 Nm in case of rigid copper conductors, 2 wires
** PZ2 24,5 lb-in in case of rigid copper conductors, 2 wires
(1) for lower temperature verify fuse technical characteristics, for higher temperature refer to derating table in Chapter 5 of Electrical installation solutions for buildings - Technical details
(2) for more than 24h max temperature is +55 °C

The E 90 fuse carriers for Class CC cylindrical fuse links are specifically designed for the North American market in compliance with the UL standards. In accordance with the reference standards UL 4248-1 and UL 4248-4, they come in voltage and current ratings up to 600V and 30A. They are available in 1P, 1P+N, 2P, 3P, 3P+N and 4P versions. They can be padlocked open and sealed closed.
The E 90 fuse carriers are the ideal solution for process control and industrial systems, automation systems, industrial installations and control circuits. The versions with blown fuse indicator light provide a visual signal of the fuse break condition

E 90 for class CC cartridge fuses

Poles	Rated current	Modules	Bbn 8012542	Order details		Price 1 piece	Weight 1 piece	Pack unit
	In		EAN	Type code	Order code		kg	pc.
1	30	1	998723	E 91/30 CC	2CSM299872R1801		0.061	6
1	30	1	998822	E 91/30s CC	2CSM299882R1801		0.062	6
1+N	30	2	998921	E 91N/30 CC	2CSM299892R1801		0.13	3
1+N	30	2	999027	E 91N/30s CC	2CSM299902R1801		0.13	3
2	30	2	999126	E 92/30 CC	2CSM299912R1801		0.122	3
2	30	2	999225	E 92/30s CC	2CSM299922R1801		0.122	3
3	30	3	999324	E 93/30 CC	2CSM299932R1801		0.183	2
3	30	3	999423	E 93/30s CC	2CSM299942R1801		0.183	2
3+N	30	4	999522	E 93N/30 CC	2CSM299952R1801		0.252	1
3+N	30	4	999621	E 93N/30s CC	2CSM299962R1801		0.252	1
4	30	4	999720	E 94/30 CC	2CSM299972R1801		0.244	1
4	30	4	999829	E 94/30s CC	2CSM299982R1801		0.244	1

s: version with blown fuse indicator light

Protection and safety

E 90 J fuse fuseholders



E 90 Class J

Technical features

Type		E 90/30 J	E 90/60 J
Rated current	[A]	30	60
Rated voltage	[V]	600	
Type of current		AC/DC	
Fuse		Class J 1-30A	Class J 31-60A
Rated frequency	[Hz]	60	
Rated insulation voltage	[kV]	1 + 2*U_n	
Tightening torque	[Nm]	PZ2 3.5-4	
Terminals cross-section	[mm²]	50	
Cross-section rigid copper conductors	[AWG]	14-10	
Cross-section stranded copper conductors	[AWG]	14-8	
Operating temperature	[°C]	-5/+40 (1)	
Storage temperature	[°C]	-25/+70 (2)	
Degree of relative humidity at temperature °C		< 60%	
Can be sealed closed		■	
Can be padlocked open		■	

(1) for lower temperature verify fuse technical characteristics, for higher temperature refer to derating table in Chapter 5 of Electrical installation solutions for buildings - Technical details
(2) for more than 24h max temperature is +55 °C

E 90 Class J

The E 90 Class J fuse carriers are the ideal solution for industrial systems, industrial installations and control circuits. They are specifically designed for the North American market in compliance with the UL standards. In accordance with the reference standard UL 4248-8, they come in voltage and current ratings up to 600V and 30/60A. They are available in 1P, 2P and 3P versions. The versions with blown fuse indicator light provide a visual signal of the fuse break condition. They can be padlocked open and sealed closed to ensure operator safety during maintenance operations.

E 90/30 fuse disconnectors for Class J fuses

Poles	Rated current	Modules	Bbn 8012542	Order details		Price 1 piece	Weight 1 piece	Pack unit
	In		EAN	Type code	Order code		kg	pc.
1	30	2	048220	E 91/30 J	2CSM204822R1801		0.135	4
2	30	4	048121	E 92/30 J	2CSM204812R1801		0.27	2
3	30	6	048022	E 93/30 J	2CSM204802R1801		0.405	1
1	30	2	047926	E 91/30s J	2CSM204792R1801		0.135	4
2	30	4	047827	E 92/30s J	2CSM204782R1801		0.27	2
3	30	6	047728	E 93/30s J	2CSM204772R1801		0.405	1

E 90/60 fuse disconnectors for Class J fuses

Poles	Rated current	Modules	Bbn 8012542	Order details		Price 1 piece	Weight 1 piece	Pack unit
	In		EAN	Type code	Order code		kg	pc.
1	60	2.5	047629	E 91/60 J	2CSM204762R1801		0.175	3
2	60	5	049821	E 92/60 J	2CSM204982R1801		0.35	1
3	60	7.5	049722	E 93/60 J	2CSM204972R1801		0.525	1
1	60	2.5	049623	E 91/60s J	2CSM204962R1801		0.175	3
2	60	5	049524	E 92/60s J	2CSM204952R1801		0.35	1
3	60	7.5	738824	E 93/60s J	2CSM273882R1801		0.525	1

s: version with blown fuse indicator light

Protection and safety
Cylindrical fuses E 9F gG



E 9F8

Technical features

Rated voltage	[V]	400, 500, 690 AC
Rated current	[A]	0.5…125
Breaking capacity	[kA]	20, 80, 120
Overall dimensions	[mm]	8.5x31.5 , 10.3x38 , 14x51 , 22x58
Weight	[g]	4, 7, 18, 48
Reference standards		IEC 60269-2; ROHS 2002/98/CE
Marks		LLOYD, BV

E 9F 8 gG cylindrical fuses 8.5 x 31.5 mm



E 9F10

Type	Rated current [A]	Rated voltage [V AC]	Breaking capacity [kA]
E 9F8 GG1	1	400	20
E 9F8 GG2	2	400	20
E 9F8 GG4	4	400	20
E 9F8 GG6	6	400	20
E 9F8 GG8	8	400	20
E 9F8 GG10	10	400	20
E 9F8 GG12	12	400	20
E 9F8 GG16	16	400	20
E 9F8 GG20	20	400	20

E 9F 10 gG cylindrical fuses 10.3 x 38 mm

Type	Rated current [A]	Rated voltage [V AC]	Breaking capacity [kA]
E 9F10 GG05	0.5	500	120
E 9F10 GG1	1	500	120
E 9F10 GG2	2	500	120
E 9F10 GG4	4	500	120
E 9F10 GG6	6	500	120
E 9F10 GG8	8	500	120
E 9F10 GG10	10	500	120
E 9F10 GG12	12	500	120
E 9F10 GG16	16	500	120
E 9F10 GG20	20	500	120
E 9F10 GG25	25	500	120
E 9F10 GG32	32	400	120

Protection and safety

Cylindrical fuses E 9F gG



E 9F14

E 9F 14 gG cylindrical fuses 14 x 51 mm

Type	Rated current [A]	Rated voltage [V AC]	Breaking capacity [kA]
E 9F14 GG2	2	690	120
E 9F14 GG4	4	690	120
E 9F14 GG6	6	690	120
E 9F14 GG8	8	690	120
E 9F14 GG10	10	690	120
E 9F14 GG12	12	690	120
E 9F14 GG16	16	690	120
E 9F14 GG20	20	690	120
E 9F14 GG25	25	690	120
E 9F14 GG32	32	690	120
E 9F14 GG40	40	680	120
E 9F14 GG50	50	500	120



E 9F22

E 9F 22 gG cylindrical fuses 22 x 58 mm

Type	Rated current [A]	Rated voltage [V AC]	Breaking capacity [kA]
E 9F22 GG4	4	690	120
E 9F22 GG6	6	690	120
E 9F22 GG8	8	690	120
E 9F22 GG10	10	690	120
E 9F22 GG12	12	690	120
E 9F22 GG16	16	690	120
E 9F22 GG20	20	690	120
E 9F22 GG25	25	690	120
E 9F22 GG32	32	690	120
E 9F22 GG40	40	690	120
E 9F22 GG50	50	690	120
E 9F22 GG63	63	690	120
E 9F22 GG80	80	690	120
E 9F22 GG100	100	500	120
E 9F22 GG125	125	500	120

Protection and safety
Cylindrical fuses E 9F gG

E 9F gG cylindrical fuses
The E 9F gG cylindrical fuses, coupled with E 90 and E 90 50/125 fuse disconnectors, are the ideal solution for protection against overload and short-circuit. They feature a fast tripping curve that is ideal for protecting electronic devices, transformers and electric cables. The E 9F gG series is available for all the main sizes (8.5 x 31.5 mm, 10.3 x 38 mm, 14 x 51 mm e 22 x 58 mm) and with a wide range of rated current values (from 1 A to 125 A and up to 690 V AC). All the E 9F series fuses conform to the RoHS directive and are type-approved in accordance with the most important international naval marks.


E 9F8

E 9F 8 gG cylindrical fuses 8.5 x 31.5 mm

Rated current	Size	Bbn 8012542	Order details		Price 1 piece	Weight 1 piece	Pack unit
In	mm	EAN	Type code	Order code		kg	pc.
1	8.5x31.5	575733	E 9F8 GG1	2CSM257573R1801		0.004	10
2	8.5x31.5	563938	E 9F8 GG2	2CSM256393R1801		0.004	10
4	8.5x31.5	586630	E 9F8 GG4	2CSM258663R1801		0.004	10
6	8.5x31.5	574835	E 9F8 GG6	2CSM257483R1801		0.004	10
8	8.5x31.5	563037	E 9F8 GG8	2CSM256303R1801		0.004	10
10	8.5x31.5	775737	E 9F8 GG10	2CSM277573R1801		0.004	10
12	8.5x31.5	773535	E 9F8 GG12	2CSM277353R1801		0.004	10
16	8.5x31.5	771333	E 9F8 GG16	2CSM277133R1801		0.004	10
20	8.5x31.5	775034	E 9F8 GG20	2CSM277503R1801		0.004	10


E 9F10

E 9F 10 gG cylindrical fuses 10.3 x 38 mm

Rated current	Size	Bbn 8012542	Order details		Price 1 piece	Weight 1 piece	Pack unit
In	mm	EAN	Type code	Order code		kg	pc.
0.5	10.3x38	773337	E 9F10 GG05	2CSM277333R1801		0.007	10
1	10.3x38	771135	E 9F10 GG1	2CSM277113R1801		0.007	10
2	10.3x38	587231	E 9F10 GG2	2CSM258723R1801		0.007	10
4	10.3x38	575436	E 9F10 GG4	2CSM257543R1801		0.007	10
6	10.3x38	563631	E 9F10 GG6	2CSM256363R1801		0.007	10
8	10.3x38	586333	E 9F10 GG8	2CSM258633R1801		0.007	10
10	10.3x38	574538	E 9F10 GG10	2CSM257453R1801		0.007	10
12	10.3x38	562733	E 9F10 GG12	2CSM256273R1801		0.007	10
16	10.3x38	775430	E 9F10 GG16	2CSM277543R1801		0.007	10
20	10.3x38	773238	E 9F10 GG20	2CSM277323R1801		0.007	10
25	10.3x38	771036	E 9F10 GG25	2CSM277103R1801		0.007	10
32	10.3x38	587132	E 9F10 GG32	2CSM258713R1801		0.007	10

Protection and safety

Cylindrical fuses E 9F gG



E 9F14

E 9F 14 gG cylindrical fuses 14 x 51 mm

Rated current	Size	Bbn 8012542	Order details		Price 1 piece	Weight 1 piece	Pack unit
In	mm	EAN	Type code	Order code		kg	pc.
2	14x51	775232	E 9F14 GG2	2CSM277523R1801		0.018	10
4	14x51	773030	E 9F14 GG4	2CSM277303R1801		0.018	10
6	14x51	770831	E 9F14 GG6	2CSM277083R1801		0.018	10
8	14x51	910039	E 9F14 GG8	2CSM291003R1801		0.018	10
10	14x51	909835	E 9F14 GG10	2CSM290983R1801		0.018	10
12	14x51	909637	E 9F14 GG12	2CSM290963R1801		0.018	10
16	14x51	587835	E 9F14 GG16	2CSM258783R1801		0.018	10
20	14x51	576037	E 9F14 GG20	2CSM257603R1801		0.018	10
25	14x51	564232	E 9F14 GG25	2CSM256423R1801		0.018	10
32	14x51	586937	E 9F14 GG32	2CSM258693R1801		0.018	10
40	14x51	575139	E 9F14 GG40	2CSM257513R1801		0.018	10
50	14x51	563334	E 9F14 GG50	2CSM256333R1801		0.018	10



E 9F22

E 9F 22 gG cylindrical fuses 22 x 58 mm

Rated current	Size	Bbn 8012542	Order details		Price 1 piece	Weight 1 piece	Pack unit
In	mm	EAN	Type code	Order code		kg	pc.
4	22x58	571834	E 9F22 GG4	2CSM257183R1801		0.048	10
6	22x58	592839	E 9F22 GG6	2CSM259283R1801		0.048	10
8	22x58	581031	E 9F22 GG8	2CSM258103R1801		0.048	10
10	22x58	569237	E 9F22 GG10	2CSM256923R1801		0.048	10
12	22x58	594031	E 9F22 GG12	2CSM259403R1801		0.048	10
16	22x58	582236	E 9F22 GG16	2CSM258223R1801		0.048	10
20	22x58	570431	E 9F22 GG20	2CSM257043R1801		0.048	10
25	22x58	595335	E 9F22 GG25	2CSM259533R1801		0.048	10
32	22x58	583530	E 9F22 GG32	2CSM258353R1801		0.048	10
40	22x58	571735	E 9F22 GG40	2CSM257173R1801		0.048	10
50	22x58	593935	E 9F22 GG50	2CSM259393R1801		0.048	10
63	22x58	582137	E 9F22 GG63	2CSM258213R1801		0.048	10
80	22x58	570332	E 9F22 GG80	2CSM257033R1801		0.048	10
100	22x58	595236	E 9F22 GG100	2CSM259523R1801		0.048	10
125	22x58	583431	E 9F22 GG125	2CSM258343R1801		0.048	10

Protection and safety
Cylindrical fuses E 9F aM



E 9F8 aM

Technical features

Rated voltage	[V]	400, 500, 690 AC
Rated current	[A]	0.5...125
Breaking capacity	[kA]	20, 80, 120
Overall dimensions	[mm]	8.5x31.5, 10.3x38, 14x51, 22x58
Weight	[g]	4, 7, 18, 48
Reference standards		IEC 60269-2; ROHS 2002/98/CE
Marks		LLOYD, BV

E 9F8 aM cylindrical fuses 8.5 x 31.5 mm

Type	Rated current [A]	Rated voltage [V AC]	Breaking capacity [kA]
E 9F1 AM1	1	400	20
E 9F8 AM2	2	400	20
E 9F8 AM4	4	400	20
E 9F8 AM6	6	400	20
E 9F8 AM8	8	400	20
E 9F8 AM10	10	400	20



E 9F10 aM

E 9F10 aM cylindrical fuses 10.3 x 38 mm

Type	Rated current [A]	Rated voltage [V AC]	Breaking capacity [kA]
E 9F10 AM05	0.5	500	120
E 9F10 AM1	1	500	120
E 9F10 AM2	2	500	120
E 9F10 AM4	4	500	120
E 9F10 AM6	6	500	120
E 9F10 AM8	8	500	120
E 9F10 AM10	10	500	120
E 9F10 AM12	12	500	120
E 9F10 AM16	16	500	120
E 9F10 AM20	20	500	120
E 9F10 AM25	25	400	120
E 9F10 AM32	32	400	120

Protection and safety

Cylindrical fuses E 9F aM



E 9F14 aM

E 9F14 aM cylindrical fuses 14 x 51 mm

Type	Rated current [A]	Rated voltage [V AC]	Breaking capacity [kA]
E 9F14 AM1	1	690	120
E 9F14 AM2	2	690	120
E 9F14 AM4	4	690	120
E 9F14 AM6	6	690	120
E 9F14 AM8	8	690	120
E 9F14 AM10	10	690	120
E 9F14 AM12	12	690	120
E 9F14 AM16	16	690	120
E 9F14 AM20	20	690	120
E 9F14 AM25	25	690	120
E 9F14 AM32	32	690	120
E 9F14 AM40	40	690	120
E 9F14 AM45	45	500	120
E 9F14 AM50	50	500	120



E 9F22 aM

E 9F22 aM cylindrical fuses 22 x 58 mm

Type	Rated current [A]	Rated voltage [V AC]	Breaking capacity [kA]
E 9F22 AM6	6	690	120
E 9F22 AM8	8	690	120
E 9F22 AM10	10	690	120
E 9F22 AM12	12	690	120
E 9F22 AM16	16	690	120
E 9F22 AM20	20	690	120
E 9F22 AM25	25	690	120
E 9F22 AM32	32	690	120
E 9F22 AM40	40	690	120
E 9F22 AM50	50	690	120
E 9F22 AM63	63	690	120
E 9F22 AM80	80	690	120
E 9F22 AM100	100	500	120
E 9F22 AM125	125	500	120

Protection and safety
Cylindrical fuses E 9F aM



E 9F8

E 9F aM cylindrical fuses

The E 9F aM cylindrical fuses, coupled with E 90 and E 90 50/125 fuse disconnectors, are the ideal solution for protection against overload and short-circuit. They feature a delayed tripping curve and are therefore ideal for protecting industrial motors that require high inrush current during the starting phase. The E 9F aM series is available for all the main sizes (8.5 x 31.5 mm, 10.3 x 38 mm, 14 x 51 mm e 22 x 58 mm) and with a wide range of rated current values (from 1 A to 125 A and up to 690 V AC). All the E 9F series fuses conform to the RoHS directive and are type-approved in accordance with the most important international naval marks.

E 9F 8 aM cylindrical fuses 8.5 x 31.5 mm

Rated current	Size	Bbn 8012542	Order details		Price 1 piece	Weight 1 piece	Pack unit
In	mm	EAN	Type code	Order code		kg	pc.
1	8.5x31.5	772835	E 9F8 AM1	2CSM277283R1801		0.004	10
2	8.5x31.5	770633	E 9F8 AM2	2CSM277063R1801		0.004	10
4	8.5x31.5	587439	E 9F8 AM4	2CSM258743R1801		0.004	10
6	8.5x31.5	575634	E 9F8 AM6	2CSM257563R1801		0.004	10
8	8.5x31.5	563839	E 9F8 AM8	2CSM256383R1801		0.004	10
10	8.5x31.5	586531	E 9F8 AM10	2CSM258653R1801		0.004	10



E 9F10 aM

E 9F 10 aM cylindrical fuses 10.3 x 38 mm

Rated current	Size	Bbn 8012542	Order details		Price 1 piece	Weight 1 piece	Pack unit
In	mm	EAN	Type code	Order code		kg	pc.
0.5	10.3x38	574736	E 9F10 AM05	2CSM257473R1801		0.007	10
1	10.3x38	562931	E 9F10 AM1	2CSM256293R1801		0.007	10
2	10.3x38	775638	E 9F10 AM2	2CSM277563R1801		0.007	10
4	10.3x38	773436	E 9F10 AM4	2CSM277343R1801		0.007	10
6	10.3x38	771234	E 9F10 AM6	2CSM277123R1801		0.007	10
8	10.3x38	587330	E 9F10 AM8	2CSM258733R1801		0.007	10
10	10.3x38	575535	E 9F10 AM10	2CSM257553R1801		0.007	10
12	10.3x38	563730	E 9F10 AM12	2CSM256373R1801		0.007	10
16	10.3x38	586432	E 9F10 AM16	2CSM258643R1801		0.007	10
20	10.3x38	574637	E 9F10 AM20	2CSM257463R1801		0.007	10
25	10.3x38	562832	E 9F10 AM25	2CSM256283R1801		0.007	10
32	10.3x38	775539	E 9F10 AM32	2CSM277553R1801		0.007	10

Protection and safety

Cylindrical fuses E 9F aM



E 9F14 aM

E 9F 14 aM cylindrical fuses 14 x 51 mm

Rated current	Size	Bbn 8012542	Order details		Price 1 piece	Weight 1 piece	Pack unit
In	mm	EAN	Type code	Order code		kg	pc.
1	14x51	575337	E 9F14 AM1	2CSM257533R1801		0.018	10
2	14x51	563532	E 9F14 AM2	2CSM256353R1801		0.018	10
4	14x51	586234	E 9F14 AM4	2CSM258623R1801		0.018	10
6	14x51	574439	E 9F14 AM6	2CSM257443R1801		0.018	10
8	14x51	562634	E 9F14 AM8	2CSM256263R1801		0.018	10
10	14x51	775331	E 9F14 AM10	2CSM277533R1801		0.018	10
12	14x51	773139	E 9F14 AM12	2CSM277313R1801		0.018	10
16	14x51	770930	E 9F14 AM16	2CSM277093R1801		0.018	10
20	14x51	587033	E 9F14 AM20	2CSM258703R1801		0.018	10
25	14x51	575238	E 9F14 AM25	2CSM257523R1801		0.018	10
32	14x51	563433	E 9F14 AM32	2CSM256343R1801		0.018	10
40	14x51	586135	E 9F14 AM40	2CSM258613R1801		0.018	10
45	14x51	574330	E 9F14 AM45	2CSM257433R1801		0.018	10
50	14x51	562535	E 9F14 AM50	2CSM256253R1801		0.018	10



E 9F22

E 9F 22 aM cylindrical fuses 22 x 58 mm

Rated current	Size	Bbn 8012542	Order details		Price 1 piece	Weight 1 piece	Pack unit
In	mm	EAN	Type code	Order code		kg	pc.
6	22x58	586036	E 9F22 AM6	2CSM258603R1801		0.048	10
8	22x58	574231	E 9F22 AM8	2CSM257423R1801		0.048	10
10	22x58	562436	E 9F22 AM10	2CSM256243R1801		0.048	10
12	22x58	775133	E 9F22 AM12	2CSM277513R1801		0.048	10
16	22x58	772934	E 9F22 AM16	2CSM277293R1801		0.048	10
20	22x58	770732	E 9F22 AM20	2CSM277073R1801		0.048	10
25	22x58	774938	E 9F22 AM25	2CSM277493R1801		0.048	10
32	22x58	772736	E 9F22 AM32	2CSM277273R1801		0.048	10
40	22x58	770534	E 9F22 AM40	2CSM277053R1801		0.048	10
50	22x58	594130	E 9F22 AM50	2CSM259413R1801		0.048	10
63	22x58	582335	E 9F22 AM63	2CSM258233R1801		0.048	10
80	22x58	570530	E 9F22 AM80	2CSM257053R1801		0.048	10
100	22x58	595434	E 9F22 AM100	2CSM259543R1801		0.048	10
125	22x58	583639	E 9F22 AM125	2CSM258363R1801		0.048	10

Protection and safety
Cylindrical fuses E 9F gPV



E 9F PV

Type		E9F PV	E9F PV 1500
Reference standards	-	IEC 60269-6; ROHS 2002/98/CE, UL	IEC 60269-6; ROHS 2002/98/CE, UL
Rated current	[A]	1...30	4...32
Rated operational voltage	[V]	1000 DC	1500 DC
Breaking capacity	[kA]	10	50
Overall dimensions	[mm]	10.3 x 38	10 x 85

E 9F PV cylindrical fuses for photovoltaic applications
The E9F PV series of cylindrical fuses has been specifically designed for protecting direct current circuits up to 1500 V DC. Those fuses are the best way to protect the strings, inverters and surge arresters in photovoltaic installations.
The range of E9F PV fuses is available in the 10.3 x 38 mm size for up to 30 A rated current values at a nominal voltage of 1000 V DC or in the 10x85 mm size up to 32 A rated current at a nominal voltage of 1500 V DC.

E 9F PV cylindrical fuses 10.3 x 38 mm

Rated current	Bbn 8012542	Order details		Price 1 piece	Weight 1 piece	Pack unit
In	EAN	Type code	Order code		kg	pc.
1 A	134568	E 9F1 PV	2CSM213456R1801		0.007	10
2 A	134667	E 9F2 PV	2CSM213466R1801		0.007	10
3 A	134766	E 9F3 PV	2CSM213476R1801		0.007	10
4 A	134865	E 9F4 PV	2CSM213486R1801		0.007	10
5 A	134964	E 9F5 PV	2CSM213496R1801		0.007	10
6 A	135060	E 9F6 PV	2CSM213506R1801		0.007	10
7 A	135169	E 9F7 PV	2CSM213516R1801		0.007	10
8 A	135268	E 9F8 PV	2CSM213526R1801		0.007	10
10 A	135367	E 9F10 PV	2CSM213536R1801		0.007	10
12 A	135466	E 9F12 PV	2CSM213546R1801		0.007	10
15 A	135565	E 9F15 PV	2CSM213556R1801		0.007	10
20 A	135664	E 9F20 PV	2CSM213566R1801		0.007	10
25 A	135763	E 9F25 PV	2CSM213576R1801		0.007	10
30 A	135862	E 9F30 PV	2CSM213586R1801		0.007	10

E9F PV cylindrical fuses 10 x 85 mm

Rated current	Bbn 8012542	Order details		Price 1 piece	Weight 1 piece	Pack unit
In	EAN	Type code	Order code		kg	pc.
4 A	339410	E9F4 PV1500	2CSM233941R1801		0.010	5
5 A	052852	E9F5 PV1500	2CSM205285R1801		0.010	5
6 A	052951	E9F6 PV1500	2CSM205295R1801		0.010	5
7 A	053057	E9F7 PV1500	2CSM205305R1801		0.010	5
8 A	053156	E9F8 PV1500	2CSM205315R1801		0.010	5
10 A	053255	E9F10 PV1500	2CSM205325R1801		0.010	5
12 A	053354	E9F12 PV1500	2CSM205335R1801		0.010	5
15 A	053453	E9F15 PV1500	2CSM205345R1801		0.010	5
20 A	068754	E9F20 PV1500	2CSM206875R1801		0.010	5
25 A	068952	E9F25 PV1500	2CSM206895R1801		0.010	5
30 A	069058	E9F30 PV1500	2CSM206905R1801		0.010	5
32 A	069256	E9F32 PV1500	2CSM206925R1801		0.010	5

Protection and safety

ILTS-E D0 Fuse-switch-disconnectors



ILTS-E1



ILTS-E1



ILTS-E3



ILTS-E/H11



ILTS-E/RE

Technical data

Reference standards	DIN VDE 0638, EN 60947-3, EN 660269-3-1
Approval	VDE
No. of poles	1, 2, 3 pole and 3 pole+N
Rated voltage	400 V AC, per pole 65 V DC (2 pole 130 V DC)
Operating current In	acc. to fuse link D0 2-63 A
Rated frequency	50/60 Hz
Rated short circuit capacity	50 kA for AC (8 kA for DC)
Power loss	5.5 W/pole
Utilization category	AC 22 B: 400 V AC 63 A according to IEC/EN 60947-3 (all versions)
	DC 22 B: 65 V DC 63 A according to IEC/EN 60947-3 (1 pole)
	DC 22 B: 130 V DC 63 A according to IEC/EN 60947-3 (2 pole)
Leakage current resistance	CTI 200
Ambient temperature	– 5 °C up to + 40 °C
Casing material	thermoplast; halogen-, phosphor-, silicone- and CFC-free
Fire classification	UL 94 (self-extinguishing)
Shock protection	according to DIN EN 50 274 (DIN VDE 0660 Part 514) BGV A3
Connection capacity	1.5 – 35 mm2 finely stranded, directly clamped or with connector sleeve Twin-function terminal for simultaneous connection of two conductors (35 mm2 and 16 mm²) or conductor and busbar
Pick-up torque	2.5 – 3 Nm
Auxiliary switch indicating contact position	
Contacts	1 NO contact + 1 NC contact
Contact rating	AC 13: 2 A/400 V, 6 A/230 V DC 13: 1 A/220 V, 6 A/24 V

Switch-disconnector ILTS-E for D0 2-63 A fuse links “Drawer technology”

User-friendly fuse-switch-disconnector in “drawer technology”:

- Snap action
- Fuse can be replaced only if the system is de-energized.
- Captive fuse carrier
- For D02 fuse links, D01 fuse link with reducing piece
- Twin box terminal on both sides
- User-friendly installation of cross-wiring in lower terminal
- Auxiliary switch to indicate switching position

Fuse-switch-disconnector

Poles	Bbn 4016779	Order details		Price 1 piece	Weight 1 piece	Pack unit
	EAN	Type code	Order code		kg	pc.
1	65347 3	ILTS-E1	2CDE101001R1901		0.210	3
2	65348 0	ILTS-E2	2CDE102001R1901		0.420	2
3	65349 7	ILTS-E3	2CDE103001R1901		0.630	1
3+N*	65350 3	ILTS-E3+N	2CDE103101R1901		0.790	1
Reducing piece	65407 4	ILTS-E/RE	2CDE000011R1901		0.001	20
Auxiliary switch 1NO/1NC	65671 9	ILTS-E/H11	2CDE000012R1901		0.050	1

* N conductor leading make contact, late closing

Protection and safety

ISS D0 Fuse carriers



ISS 16/1



ISS 63/1



ISS 16/3



ISS 63/3

Technical features

Size	D01	D02
Current type	AC (50 Hz)/DC	AC (50 Hz)/DC
Rated voltage	400 V AC/250 V DC	400 V AC/250 V DC
Rated current	16 A	63 A
Rated short-circuit current	50 kA (AC) 8 kA (DC)	50 kA (AC) 8 kA (DC)
For fuse links with losses per phase up to	2.5 W	5.5 W

D0 fuse carrier ISS with integrated red cover

D0 fuse base for NEOZED fuse links D01/D02. Touch-protection according to DGUV regulation 3. Twin box terminal on both sides for connection of two different conductor cross-sections or conductors and busbars.

Conductor cross-sections incoming and outing 1.5 – 35 mm^2, stranded. With integrated terminal cover. A separate cover for distribution board installation is not required.

- IEC 60269-3/VDE 0636-3
- 1/3-pole
- Fuse links, connector sleeves VDE 0636-3
- Snap clip device for rail mounting to EN 60715
- Twin function terminal
- Connection cross-section 1.5 – 35 mm^2
- Tightening torque 2.5 – 3 Nm

D0 fuse carrier

Poles	Screw cover/fuse	Bbn 4016779	Order details		Price 1 piece	Weight 1 piece	Pack unit
		EAN	Type code	Order code		kg	pc.
1	E14 D01	65579 8	ISS 16/1	2CDE111001R1902		0.08	9
1	E18 D02	65581 1	ISS 63/1	2CDE161001R1902		0.08	9
3	E14 D01	65580 4	ISS 16/3	2CDE113001R1902		0.24	9
3	E18 D02	65582 8	ISS 63/3	2CDE163001R1902		0.24	9

Protection and safety

Busbars and accessories for ILTS-E and ISS

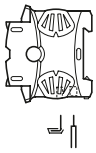

ISS, 1pole

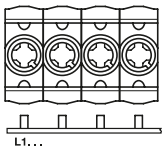

PS 1/39/16 ILTS-E
PS 1/39/30 ILTS-E

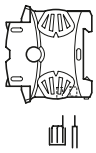

ISS, 3pole

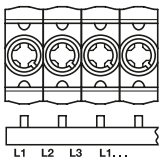

PS 3/39/16 ILTS-E
PS 3/39/30 ILTS-E

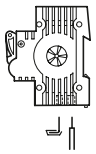

ILTS-E, 1pole

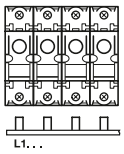

PS 1/39/16 ILTS-E
PS 1/39/30 ILTS-E

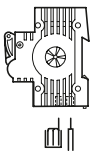

ILTS-E, 3pole

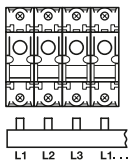

PS 3/39/16 ILTS-E
PS 3/39/30 ILTS-E



Fuse links
D 01
2-16 A



D 02
20-63 A

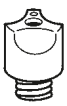

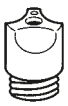

D0 screw caps

Busbars for fuse-switch-disconnector ILTS-E and fuse carrier ISS: 1pole or 3pole
End caps:
PS 1/39/16 ILTS-E: END 1.1
PS 1/39/30 ILTS-E: PS-END 3.2
PS 3/39/16 ILTS-E: PS-END
PS 3/39/30 ILTS-E: PS-END 3

Busbars

Cross-section	Length	No. of poles	Cu factor	Bbn 4012233	Order details		Price 1 piece	Weight 1 piece	Pack unit
mm²	mm			EAN	Type code	Order code		kg	pc.
16	1040	39 x 1	0.43	66956 6 (1)	PS 1/39/16 ILTS-E	2CDL010101R1639	15	0.23	10
30	1040	39 x 1	0.74	66957 3 (1)	PS 1/39/30 ILTS-E*	2CDL010101R3039	15	0.487	5
16	1040	39 x 3	1.3	66958 0 (1)	PS 3/39/16 ILTS-E	2CDL030101R1639	15	0.59	10
30	1040	39 x 3	1.95	66959 7 (1)	PS 3/39/30 ILTS-E*	2CDL030101R3039	15	1.222	5

(1) bbn-Nr. 40 16779 * Not compatible with ISS

End caps

Cross-section	Length	No. of poles	Cu factor	Bbn 4016779	Order details		Price 1 piece	Weight 1 piece	Pack unit
mm²	mm			EAN	Type code	Order code		kg	pc.
		1		63891 3	END 1.1	2CDL200011R0011	15	0.001	50
		2/3		51472 9	PS-END	2CDL200001R0001	15	0.001	50
		2/3		65430 2	PS-END 3	2CDL200001R3001	15	0.001	50
		1		66960 3	PS-END 3.2	2CDL200001R3003	15	0.001	50

D0 fuses and accessories

D0 fuse links to DIN VDE 0636-3, IEC/EN 60269-3 suitable for D01/E14

Rated current	Colour code	Power loss	Bbn 4012233	Order details		Price 1 piece	Weight 1 piece	Pack unit
A		W	EAN	Type code	Order code		kg	pc.
2	pink	1.5	60480 7	D01 x 2 gG	GMN 977120P0011	13	0.006	10
4	brown	1.5	60490 6	D01 x 4 gG	GMN 977120P0012	13	0.006	10
6	green	1.5	60500 2	D01 x 6 gG	GMN 977120P0013	13	0.006	10
10	red	1.8	60510 1	D01 x 10 gG	GMN 977120P0014	13	0.006	10
16	grey	2.1	60520 0	D01 x 16 gG	GMN 977120P0015	13	0.006	10

Suitable for D02/E18

Rated current	Colour code	Power loss	Bbn 4012233	Order details		Price 1 piece	Weight 1 piece	Pack unit
A		W	EAN	Type code	Order code		kg	pc.
20	blue	2.3	60530 9	D02 x 20 gG	GMN 977120P0017	13	0.011	10
25	yellow	2.6	60540 8	D02 x 25 gG	GMN 977120P0018	13	0.012	10
35	black	2.9	60550 7	D02 x 35 gG	GMN 977120P0019	13	0.013	10
50	white	3.5	60560 6	D02 x 50 gG	GMN 977120P0020	13	0.014	10
63	copper	4.2	60570 5	D02 x 63 gG	GMN 977120P0021	13	0.015	10

Protection and safety

Busbars and accessories for ILTS-E and ISS





Connector sleeves
D 01 2-10 A
D 02 2-50 A



FD 1713

D0 screw caps acc. to DIN VDE 0636-3, IEC/EN 60269-3, 400 V AC
Plastic version, RAL 7037

Rated current	Colour code	Power loss	Bbn 4012233	Order details		Price 1 piece	Weight 1 piece	Pack unit
A		W	EAN	Type code	Order code		kg	pc.
16	for D01	–	60790 7	D01 DIN 49 525 K	GMN 977130P0011	13	0.015	20
63	for D02	–	60800 3	D02 DIN 49 525 K	GMN 977130P0012	13	0.015	20

D0 connector sleeves to DIN VDE 0636-3, IEC/EN 60269-3
Suitable for D01/E14

Rated current	Colour code	Power loss	Bbn 4012233	Order details		Price 1 piece	Weight 1 piece	Pack unit
A		W	EAN	Type code	Order code		kg	pc.
2	pink	–	60600 9	D01 x 2	GMN 977125P0001	13	0.001	50
4	brown		60610 8	D01 x 4	GMN 977125P0002	13	0.001	50
6	green		60620 7	D01 x 6	GMN 977125P0003	13	0.001	50
10	red		60630 6	D01 x 10	GMN 977125P0004	13	0.001	50

Suitable for D02/E18

Rated current	Colour code	Power loss	Bbn 4012233	Order details		Price 1 piece	Weight 1 piece	Pack unit
A		W	EAN	Type code	Order code		kg	pc.
2	pink	–	60640 5	D02 x 2	GMN 977125P0011	13	0.001	50
4	brown		60650 4	D02 x 4	GMN 977125P0012	13	0.001	50
6	green		60660 3	D02 x 6	GMN 977125P0013	13	0.001	50
10	red		60670 2	D02 x 10	GMN 977125P0014	13	0.001	50
16	grey		60680 1	D02 x 16	GMN 977125P0015	13	0.001	50
20	blue		60690 0	D02 x 20	GMN 977125P0016	13	0.001	50
25	yellow		60700 6	D02 x 25	GMN 977125P0017	13	0.001	50
35	black		60710 5	D02 x 35	GMN 977125P0018	13	0.001	50
50	white		60720 4	D02 x 50	GMN 977125P0019	13	0.001	50

Spring clip for use of D01 fuses in D02 screw caps

Rated current	Colour code	Power loss	Bbn 4012233	Order details		Price 1 piece	Weight 1 piece	Pack unit
A		W	EAN	Type code	Order code		kg	pc.
			15120 7	FD 1713	GMN 977130P0004	13	0.001	50

Protection and safety

Electronic Protection Devices for use behind 24 V DC Switch Mode Power Supplies



EPD

Operating data

Operating voltage UB	24 V DC (18...32 V)		
Current rating IN	fixed current ratings: 0.5, 1, 2, 3, 4, 6, 8, 10, 12 A		
Closed current I0	ON condition: typically 20...30 mA depending on signal output		
Staus indication by means of	multicolour LED	Green	- unit is ON (S1 = ON)
			- load circuit/Power-is switched on MOSFET
		Orange	- in the event of overload or short circuit until electronic disconnection
		Red	- unit electronically disconnected
			- load circuit/Power-MOSFET OFF
			- undervoltage (UB < 8 V)
			- after switch-on till the end of the delay period
		OFF	- manually switched off (S1 = OFF) or device is dead
	potential-free auxiliary contact F		
	ON/OFF/condition of switch S1		

Load circuit

Load output	Power-MOSFET switching output (high slide switch)
Overload disconnection	typically 1.1 x IN (1.05...1.35 x IN)
Short-circuit current IK	active current limitation (see table 1)
Trip time	see time/current characteristics
For electronic disconnection	typically 3 s at ILoad > 1.1 x IN typically 100 ms...3 s at ILoad > 1.8 x IN (or 1.5 x IN/1.3 x IN,)
Temperature disconnection	internal temperature monitoring with electronic disconnection
Low voltage monitoring load output	with hysteresis, no reset required: load »OFF« at UB< 8 V
Starting delay tStart	typically 0.5 sec after every switch-on and after applying US
Disconnection of load circuit	electronic disconnection
Free-wheeling circuit	suitable external free-wheeling circuit to be used with inductive load
Several load outputs must not be connected in parallel	

Signal output F

Electrical data	potential-free auxiliary contact max. 30 V DC/0.5 A, min. 10 V DC/10 mA
ON condition LED green	voltage UB applied, switch S1 is in ON position no overload, no short circuit
OFF condition LED off	device switched off (switch S1 is in OFF position)
	no voltage UB applied
Fault condition LED orange	overload condition > 1.1 x IN up to electronic disconnection
Aux. contact	single signal, make contact
	contact open, terminal 13-14
Fault	signal output fault conditions
	- no operating voltage UB
	- ON/OFF switch S1 is in OFF position
	- red LED lighted (electronic discon nection)

Protection and safety

Electronic Protection Devices for use behind 24 V DC Switch Mode Power Supplies

General data

Fail-Safe element	backup fuse for EPD24 not required
	because of the integral redundant fail-safe element
Housing material	moulded
Mounting	symmetrical rail to EN 50022-35x7.5
Ambient temperature	-25...+60°C (without condensation, see EN 60204-1; ambient temperature range may differ for approvals)
Storage temperature	-40...+70 °C
Humidity	96 hrs/95 % RH/40 °C to IEC 60068-2-78, test Cab. climate class 3K3 to EN 60721
Vibration	3 g, test to IEC 60068-2-6 test Fc
Protection degree	housing: IP20 DIN 40050
	terminals: IP20 DIN 40050
EMC (EMC directive, CE logo)	emission: EN 61000-6-3
	susceptibility: EN 61000-6-2
Isolations coordination (IEC 60934)	0.5 kV/pollution degree 2 reinforced insulation in operating area
Dielectric strength	max. 32 V DC (load circuit)
Isolation resistance (OFF condition)	n/a, only electronic disconnection
Approvals/Declarations of conformity	UL 2367 Solid State Overcurrent Protectors
	UL 1604, (class I, division 2, groups A, B, C, D)
	UL 508
	CSA C22.2 No. 213 (class I, division 2)
	CSA C22.2 No. 142
	CSA C22.2 No. 14
	CE logo
Dimensions (B x H x T)	12.5 x 80 x 83 mm
Weight	approx. 65 g

Terminals Line+/LOAD+/0V

Screw terminals	M4
Max. cable cross section flexible with wire end ferrule w/wo plastic sleeve	0.5 – 10 mm^2
Multi-lead connection (2 identical cables) rigid/flexible	0.5 – 4 mm^2
Flexible with wire end ferrule without plastic sleeve	0.5 – 2.5 mm^2
Flexible with TWIN wire end ferrule with plastic sleeve	0.5 – 6 mm^2
Wire stripping length	10 mm
Tightening torque (EN 60934)	1.5 – 1.8 Nm

Terminals aux. contacts

Screw terminals	M3
Max. cable cross section flexible with wire end ferrule w/wo plastic sleeve	0.25 - 2.5 mm^2
Wire stripping length	8 mm
Tightening torque (EN 60934)	0.5 Nm

Protection and safety

Electronic Protection Devices for use behind 24 V DC Switch Mode Power Supplies



EPD24

The protection devices EPD24 extend the ABB product range of modular DIN rail components by electronic overcurrent protection modules for selective protection of 24V DC load circuits.
This protection is achieved by a combination of active electronic current limitation in the case of a short circuit and an overload deactivation from 1.1 x In upwards.
If a fault occurs in a load circuit, the protection device EPD24 will detect this rapidly and reliably, disable the power output transistor and hence interrupt the current flow in the defective circuit. The maximum possible overcurrent is always limited to 1.5...1.8 times the selected rated current. An activation of capacitive loads up to 20.000 µF is possible, deactivation only occurring in the case of overloads or short circuits. Selective deactivation of the defective current circuit means undefined error states and a complete system stop are prevented.

Features

- Selective load protection, one electronic trip characteristics.
- Active current limitation for safe connection of capacitive loads up to 20.000 µF and on overload/short circuit.
- Current ratings 0.5 A...12 A.
- Reliable overload disconnection with 1.1 x IN
- Manual ON/OFF button
- Clear status and failure indication through LED and auxiliary contact.
- Integral fail-safe element adjusted to current rating.
- Width per unit only 12.5 mm.
- Rail mounting
- Ease of wiring through busbar LINE+ and 0 V as well as signal bars.
- UL- and CSA-approvals allow international use of the devices.

Rated current In	Bbn 4016779	Order details		Price 1 piece	Weight 1 piece	Pack unit
A	EAN	Type code	Order code		kg	pc.
0.5	829960	EPD24-TB-101-0.5A	2CDE601101R2905		0.065	4
1	829984	EPD24-TB-101-1A	2CDE601101R2001		0.065	4
2	830003	EPD24-TB-101-2A	2CDE601101R2002		0.065	4
3	830027	EPD24-TB-101-3A	2CDE601101R2003		0.065	4
4	830041	EPD24-TB-101-4A	2CDE601101R2004		0.065	4
6	830065	EPD24-TB-101-6A	2CDE601101R2006		0.065	4
8	830089	EPD24-TB-101-8A	2CDE601101R2008		0.065	4
10	830102	EPD24-TB-101-10A	2CDE601101R2010		0.065	4
12	830126	EPD24-TB-101-12A	2CDE601101R2012		0.065	4

Accessories

	Bbn 4016779	Order details		Price 1 piece	Weight 1 piece	Pack unit
	EAN	Type code	Order code		kg	pc.
Busbars for LINE+ and 0 V, grey insulation, length 500 mm [1]	830140	EPD-BB500	2CDE605100R0500		0.20	10
Signal Bars for aux. contacts, grey insulation, length 21 mm	830164	EPD-SB21	2CDE605200R0021		0.04	10

1) Max. load with one line entry Imax = 50 A (recommended: center-feeding)
Max. load with two line entries Imax = 63 A

Protection and safety

SQZ3 phase and sequence relay



SQZ3

Technical features

Supply voltage	[Vn]	400 V AC
Frequency	[Hz]	50/60
Contact type	[A]	1 CO, 250 V, 10 A (cosφ=1) safety switching
Minimum voltage adjustment trimmer	[%]	100 to 70 % of Vn
Intervention delay adjustment trimmer	[s]	2 to 20 (only for min. voltage)
Protection degree	[IP]	20
Operating temperature	[°C]	-10...+55
Power consumption	[W]	1.5
Modules	[n°]	3

SQZ3 phase and sequence relay

SQZ3 relay performs the following continue monitoring functions on three-phase networks at 400 V AC:

- phase sequence
- phase failure
- minimum voltage (adjustable up to 70 % of Vn).

If one of the three failures is detected, the output relay (safety switching contact) intervenes with a delay adjustable from 2 to 20 seconds for minimum voltage only and controls the following:

- acoustic alarms
- motor controlling contactors
- circuit-breakers with coils.

	Bbn 8012542	Order details		Price 1 piece	Weight 1 piece	Pack unit
	EAN	Type code	Order code		kg	pc.
	372004	SQZ3	2CSM111310R1331		0.300	1

Protection and safety

E 236 undervoltage monitoring relays



E 236-US 1



E 236-US 2

Technical features

		US 1 US 2
Rated voltage		250 V AC
Rated frequency		48-63 Hz
Measuring range:	supply voltage	3N 400/230 V AC (terminals N-L1-L2-L3)
	overload capacity	3N 459/265 V AC
Switching capacity		device in series (distance < 5 mm): 750 VA (3 A/250 V AC);
		device not in series (distance > 5 mm): 1250 VA (5 A/250 V AC)
Rated insulation voltage		250 V AC (corresponds with IEC 664-1)
Rated surge voltage		4 kV
Tripping delay		ca. 100 ms
Clearence and creepage distance		> 6mm (between contact and electronics)
Mechanical service life		20 x 106 operations
Electrical service life at 10000 VA		2 x 105 operations
Max. switching rate		max. 6/min (1000 VA Ohmic load);
		max. 60/min (100 VA Ohmic load)
Ambient temperature		-25 °C/-13 °F to +55 °C/131 °F
Overvoltage category		III
Accuracy in non-changing environment:	setting tolerance (US 2)	≤ 5 %
	repeat accuracy	±1 %
	temperature effect	≤ 0.1 %/°C
Max terminals cross-section		4 mm^2
Specifications		VDE 0110 and VDE 0435
EMC tests		EM 50081-1 and EN 50082-2
Displays		LED green= supply voltage applied; LED yellow= relay status
Power loss		1.7 W

E 236 undervoltage monitoring relays

Function

The green LED is lit when the supply voltage is applied. If each phase voltage exceeds 195 V (US1) or exceeds the preset threshold value (US2) with respect to the neutral including the hysteresis when switching the device on, the relay switches immediately into the working position. The yellow LED is lit. If at least one phase voltage falls below the threshold value, the relay goes back into its normal position and the yellow LED goes out.
If also phase 2 fails, the green LED goes out, too.
It is indispensable to connect the neutral conductor!

Application - devices with 2CO contacts

For the control of three-phase undervoltage (each phase to neutral) of switchgear, also for installations according to DIN VDE 0100-718 (power installations in hospitals and rooms used for medical purposes outside of hospitals) and DIN VDE 0108-100 (power installations and safety supply in buildings where many people gather).
US 1: 3 phases to neutral with fixed threshold at 195 V; hysteresis fixed 5 %
US 2: 3 phases to neutral with fixed threshold at 160 – 240 V; hysteresis fixed 5 %

Contact	Bbn 4016779	Order details		Price 1 piece	Weight 1 piece	Pack unit
	EAN	Type code	Order code		kg	pc.
2CO	511087	E 236-US 1	2CDE165000R2001		0.095	5
2CO	511094	E 236-US 2	2CDE165010R2001		0.095	5

Protection and safety

E 236 undervoltage monitoring relays



E 236

Technical features

		US 1.1 US 2.1 US 1.1D
Supply circuit		
Supply voltage (= measured voltage)		3N~ 400/230 V AC (terminals N-C1-C2-C3)
Overvoltage permanent		3N~ 459/265 V AC
Rated frequency		48 – 63 Hz (AC sinus)
Rated surge voltage:		4 kV
Overvoltage category		III
Output circuit (isolated two-way-switch)		
Rated voltage		250 V AC
Switiching capacity		1250 VA (5 A/250 V AC)
Continuous current		1250 VA (5 A/250 V AC)
Fuse protection		5 A flink
Serviceable life, mechanical		15x106 switchover cycles
Serviceable life, electric		2x105 switchover cycles at 1.000 VA resistive load
Max. switching rate		max. 6/min at 1.000 VA resistive load
		max. 60/min at 100 VA resistive load
Trip delay		ca. 200 ms
Pick-up delay (US 1.1D)		0.1 – 10 min
Accuracy under constant conditions – setting accuracy (US 2.1/1.1D) – repeat accuracy – temperature effect		≤ 5 % of full scale value ≤ 2 % ≤ 1 %
Ambient temperature		– 25° to + 55 °C
Terminals		1 x 0.5 to 2.5 mm² with/without connector sleeve
		1 x 4 mm² without connector sleeve
		2 x 0.5 to 1.5 mm² with/without connector sleeve
		2 x 2.5 mm² without connector sleeve
Pick-up torque		max. 1 Nm
Mounting position		optional
Vibration resistance		10 to 55 Hz 0.35 mm (IEC 68-2-6)
Shock resistance		15 g 11 ms (IEC 68-2-27)
Reference standards		VDE 0110 und VDE 0435
EMC tests		EN 61000-6-2 and EN 61000-6-4
Back-up fuse		≤ 16 A
Displays	green LED U/t ON	all 3 voltages ok
	green LED U/t flashes	time-out indication
	yellow LED ON/OFF	position of output relay

All measured inputs have to be connected to one phase each. If no three-phase measurement should be carried out, measured inputs have to be connected to one phase to apply the required voltage to all measured inputs. If a load causes inverse voltage exceeding the threshold value Us, phase failures cannot be identified.
A neutral conductor must be connected in any case!

Protection and safety

E 236 undervoltage monitoring relays



E236-US1.1



E236-US2.1



E236-US1.1D

Devices for panel installation onto mounting rails (35 mm) according to DIN EN 60715
mounting depth: 68 mm
mounting width: 17.5 mm = 1 module
color: gray, RAL 7035

Application - devices with 1CO contact
For three-phase undervoltage monitoring (each phase connected to a neutral conductor) of switchgear. Devices with fixed threshold value (US 1.x and US 1.1 D) also for installations according to
DIN VDE 0100-718 (for medical purposes) and DIN VDE 0108-100 (power installations and safety supply in installations for gathering of people).

US 1.1: 3 phases to neutral conductor with fixed threshold value at 195 V; hysteresis fixed at 5 %

US 2.1: 3 phases to neutral conductor with threshold value range of 160 – 240 V; hysteresis fixed at 5 %

US 1.1D: 3 phases to neutral conductor with fixed threshold value at 195 V; hysteresis fixed at 5 %, but with switch-on delay of 0.1 (6 sec.) to 10 min

Undervoltage monitoring device with pick-up delay E236-US 1.1D
If the measurement of the voltage of all phases connected exceeds the switching threshold U_s, including the hysteresis, the time delay (t) starts to run and the (green LED U/t) flashes. Upon expiry of the time delay (t), the output relay R picks up (yellow LED on, green LED U/t flashes). If the measured voltage of one of the connected phases falls below the switching threshold U_s, the output relay de-energizes (yellow LED is off, green LED U/t is off).

Contact	Bbn 4016779	Order details		Price 1 piece	Weight 1 piece	Pack unit
	EAN	Type code	Order code		kg	pc.
1 two-way switch	651776	E 236-US 1.1	2CDE165001R2001		0.05	10
1 two-way switch	651783	E 236-US 2.1	2CDE165011R2001		0.05	10
1 two-way switch	651790	E 236-US 1.1D	2CDE165001R2011		0.05	10

Protection and safety

ISL industrial insulation monitoring devices



ISL

Technical features ISL-A

			ISL-A		
			A 24-48	**A 115 and A 230**	**A 600**
Power consumption		[VA]	3	4	6
ALARM threshold		[kW]	30 - 300 (5 levels, selectable)		
TRIP threshold		[kW]	10 - 60 (5 levels by switches)	10 - 100 (5 levels selectable)	30 - 300 (adjustable by potentiometer)
LED indications	ON		■	■	■
	TRIP		■	■	■
	ALARM			■	
	+/-		■	■	■
Max trip delay		[s]	0.2	2	2.5
Max measuring current		[mA]	0.5	1.8	1.5
Internal impedance		[kW]	50	ISL-A 115: 200 kΩ L+/L- 100 kΩ L/PE ISL-A 230: 400 kΩ L+/L- 200 kΩ L/PE	880 kW L+/L - 450 kW L/PE
TRIP relay output			1 NO-C-NC	2 NO-C-NC	1 NO-C-NC
ALARM relay output			2 NO-C-NC		
Relay contact capacity			max 250 V, 5 A		
Programmed functions	Alarm output		■		
	Fail safe		■		
	Reset		■		
Insulation			2.5 kV60 sec./ 6 kV imp 1.2/50 µs	2.5 kV 60 sec./ 4 kV imp 1.2/50 µs	2.5 kV 60 sec./ 6 kV imp 1.2/50 µs
Operating temperature		[°C]	-10 ÷ 60		
Storage temperature		[°C]	-20 ÷ 70		
Relative humidity			≤ 90%		
Max terminal cross-section		[mm²]	4	2.5	2.5
Protection degree			IP40 front, IP20 enclosure		
Modules		[n°]	3	6	6
Weight		[g]	200	400	400
Reference standards			EN 61010-1, EN 61557-8, EN 61326-1		

Protection and safety

ISL industrial insulation monitoring devices



ISL-A

Technical features ISL-C and ISL-MOT

			ISL-C			ISL-MOT
			C 230	C 440	C 600	MOT 1000
Auxiliary power supply		[V]	220-240 V AC	220-240 V AC	100÷130 V AC/ 220÷240 V AC	220- 240 V AC
Power consumption		[VA]	3	3	5	3
TRIP threshold		[kW]	100	10 -150 (5 levels)	10-100 (5 levels)	0.1-10 MW (8 levels)
LED indications	ON		■	■	■	■
	TRIP		■	■	■	■
	ALARM				■	
Max trip delay		[s]	1	4	5	0.2
Max measuring current		[mA]	0.1		0.25	0.0015
Max measuring voltage		[V]	12 V DC		48	20
Internal impedance		[kW]	250	250	200	AC: 1000 DC: 1500
TRIP relay output			1 NO-C-NC	1 NO-C-NC	2 NO-C-NC	1 NO-C-NC
Relay contact capacity			max 250 V, 5 A			
Insulation			2.5 kV60 sec./4 kV imp 1.2/50 µs			
Operating temperature		[°C]	-10 ÷ 60			
Storage temperature		[°C]	-20 ÷ 70			
Relative humidity			≤ 95%			
Max terminal cross-section		[mm²]	4	4	2.5	4
Protection degree			IP40 front, IP20 enclosure			
Modules		[n°]	3	3	6	3
Weight		[g]	200	200	500	200
Reference standards			EN 61010-1, EN 61557-8, EN 61326-1			

Insulation monitoring devices for voltageless network

Monitored line voltage	Bbn 8012542	Order details		Price 1 piece	Weight 1 piece	Pack unit
	EAN	Type code	Order code		kg	pc.
20-700 V AC/DC	943204	ISL-MOT 1000	2CSM808000R1500		0.300	1

Protection and safety

ISL industrial insulation monitoring devices



ISL-A



ISL-C

Insulation monitoring devices

In IT electrical distribution networks with isolated neutral, the high insulation impedance prevents earth faults from generating currents that would dangerously elevate the potential of exposed conductive parts. Therefore, in case of earth leakage in an IT network it is not necessary to interrupt the supply, but it is still essential to continually monitor the insulation level in order to detect faults and restore optimal functioning of the system.
In industrial installations, IT networks are used when operational continuity is an intrinsic requirement of the production process, due to both technical and economic considerations. Such applications include: metalworking and chemical industries, explosion risk locations, railway lines and vehicles, uninterruptible power supplies, cinema sets, emergency lines, fire water pumps and emergency lighting.

Insulation monitoring devices for AC networks

Max. monitored line voltage	Bbn 8012542	Order details		Price 1 piece	Weight 1 piece	Pack unit
	EAN	Type code	Order code		kg	pc.
220-240 V AC	942801	ISL-C 230	2CSM444000R1500		0.300	1
380-415 V AC	942900	ISL-C 440	2CSM545000R1500		0.300	1
60-760 V AC	943006	ISL-C 600	2CSM656000R1500		0.500	1

Insulation monitoring devices for DC networks

Max. monitored line voltage	Bbn 8012542	Order details		Price 1 piece	Weight 1 piece	Pack unit
	EAN	Type code	Order code		kg	pc.
100-144 V DC	942603	ISL-A 115	2CSM222000R1500		0.500	1
220 V DC	942702	ISL-A 230	2CSM333000R1500		0.500	1
400-600 V DC	498537	ISL-A 600	2CSM249853R1500		0.500	1

Insulation monitoring devices for AC/DC networks

Monitored line voltage	Bbn 8012542	Order details		Price 1 piece	Weight 1 piece	Pack unit
	EAN	Type code	Order code		kg	pc.
24-28 V AC/DC	942504	ISL-A 24-48	2CSM111000R1500		0.300	1

Notes

H+ Line. Operational continuity

A wide range which ensure safety and reliability in hospital segment

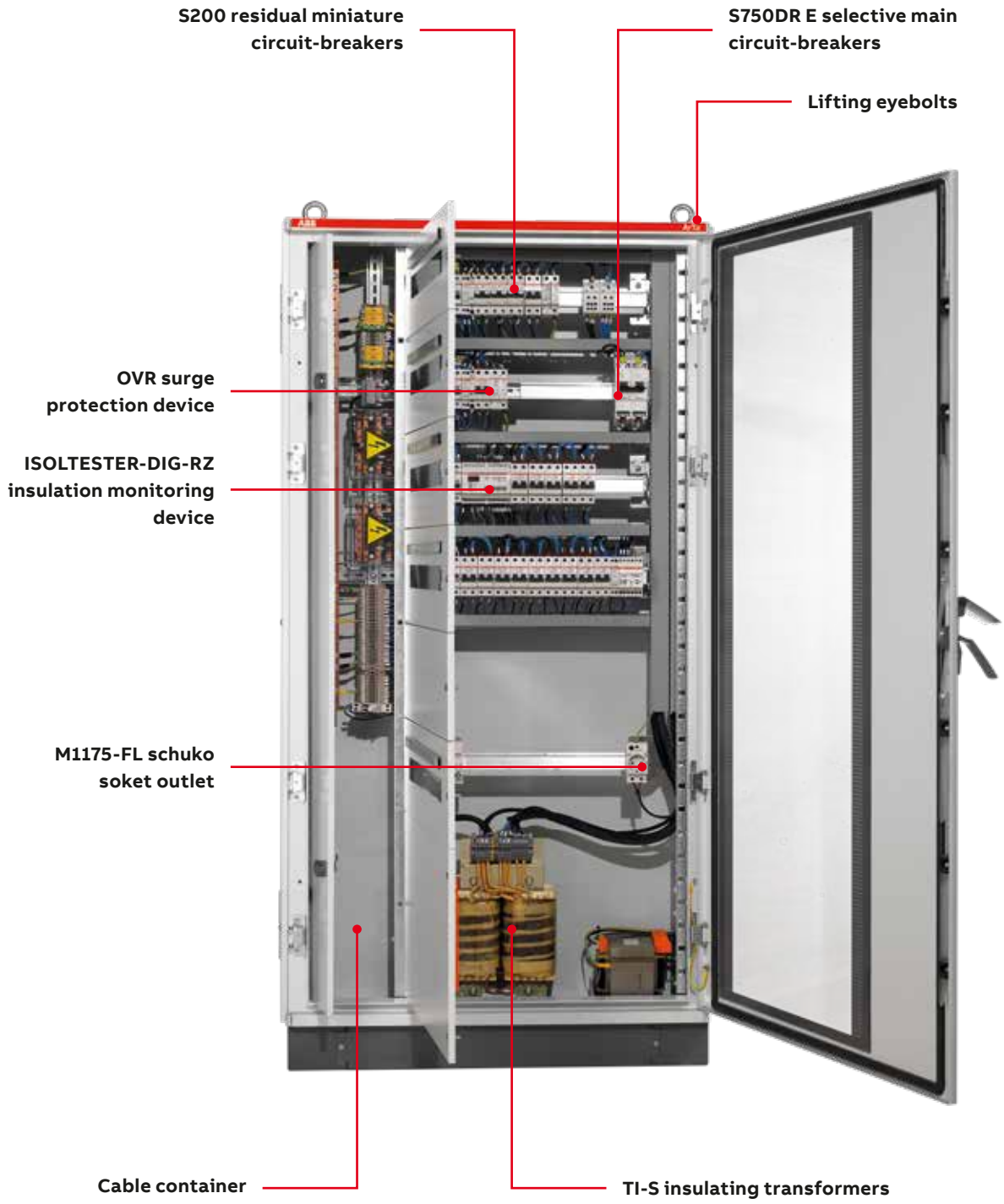



Specifically designed and assembled for medical use according to the IEC EN 61558-2-15, it ensures protection against indirect contacts without the need to interrupt the circuit automatically upon the first grounding fault.
Thanks to its two PT100 temperature probes, on primary and secondary winding, it is possible to monitor the transformer over temperature produced by any eventual overload, and therefore anticipating any breakdown.
The transformer is mounted on the base of the switchboard in order to ease handling and installation operations.



Artu K series floor standing switchboards are equipped with a cable container that makes installation and wiring easier, both for the electrical systems distributed along the false cieling, as under the floor.
It is possible to reach any terminal block in a comfortable way.
Finally, there is a copper equipotential bonding busbar which may lodge up to 20 additional connections, providing grounding connections to all the external masses which are present in the medical premises, and avoiding the creation of further cascade sub-nodes that are not allowed.



This is an insulation monitoring device for group 2 medical locations fully compliant with the IEC 60364-7-710 reference standard. It integrates all the performances established by the reference standard, such as overload and overcurrent monitoring, together with traditional IT system earthing insulation measurement.



Floor standing QSO switchboards are composed of modular ArTu K series enclosures. The switchboards are equipped with venting grooves that guarantee proper natural convection, useful to dissipate the heat produced by the transformer during its normal functioning.

Protection and safety
H+Line products

Solutions for the hospital sector
ABB's extensive experience in the hospital field is certified by several installations in leading hospitals, which represent the current leading-edge in safety and technology. Over the years, ABB has developed an increasingly more complete product with higher performance to meet the needs of more demanding customers and guarantee patient and operator safety.
H+Line products are specifically designed for group 2 medical environments in full compliance with Standard IEC 60364-7-710, specifically:
- Intensive therapy wards, operating theatres, cardio surgical rooms, ICU…
- Day hospitals, clinics, rest homes, dental and veterinary clinics, etc.

H like Hospital

+ like health and first aid

+ like the countless advantages of ABB products





Protection and safety

H+Line products

H+Line product range

ISOLTESTER		Insulation monitoring device for IT-M 230 V circuits
SELVTESTER		Insulation monitoring device for SELV 24 V circuits which supply scialitic lamps.
QSD		Remote signalling panel for visual and acoustic fault indication.
TI		Medical insulating transformers for insulated protection systems.
QSO		Wall mounting and floor standing switchboards for medical locations.

Valid assistance for consultants

Everyone knows what the regulations say. ABB tells you what they don’t say. The “Practical guide to group 2 medical locations” is designed to be a useful daily tool for consultants and installers to help them in each group 2 hospital electrical system designing and installation. The document was developed toghether with ABB customers with the intent to support key regulatory questions with practical solutions, considerations and reccomendations on system design. This way, the “Practical guide to group 2 medical locations” is a valid tool, with plenty of of examples, to support consultants in their daily job.

Protection and safety

ISOLTESTER-DIG insulation monitoring devices



ISOLTESTER-DIG

Technical features

	ISOLTESTER-DIG-RZ	ISOLTESTER-DIG-PLUS/RS
Aux supply	115 - 230 V 50-60Hz	
Power consumption	5 VA max	6 VA max
Rated voltage	24 ÷ 230 V 50-60 Hz	24 ÷ 250 V AC/DC
Measurament current	1 mA max	
Measurement voltage	24 V max	
Control signal	Continuous with digital filter	Composite codified (PLUS only)
Internal impedance	200 kΩ	
Insulation measurement	0 ÷ 999 kΩ	
	resolution 1 kΩ	
	accuracy 5% ± 1 digit	
Impedance measurement	0 ÷ 999 kΩ	
	resolution 1 kΩ	
Temperature measurement	PT100 with 2 or 3 wires, PTC	
	0 ÷ 200 °C,	
	resolution 1 °C,	
	accuracy 2 % ± 1 digit	
Current measurement	CT .../5 A external	
	accuracy 5% ± 1 digit, (adjustable transformation rate 1÷40)	
Capacity measurement	no	0 ÷ 9.9 µF (PLUS only)
		resolution 0.1 µF (PLUS only)
Thresholds	Resistance: 50 ÷ 500 kΩ	
	Impedance: 50 ÷ 500 kΩ	
	Thermal overload: 30 ÷200 °C with PT100	
	Electrical overload: 1 ÷ 99.9 A	
Signals	incorrect wiring (link fail)	
	open/short circuit for temp sensor PT100	
	internal error	
Output	QSD supply (max 2 QSD), max 24 V DC	QSD supply (max 4 QSD), max 24 V DC
	Signals to QSD	
	aux relay for low resistance, NO-C-NC 5A 250 V AC	programmable aux relay, NO-C-NC 5A 250 V AC
	-	Serial output RS485, ModbusRTU protocol
Modules	6	
Weight	0.4 kg	0.5 kg
Mechanical features	fire resistant plastic case	
	sealable transparent front cover	
Terminals	screw terminals 2.5 mm^2	
Protection degree	IP20, IP50 when the cover is closed	
Operating temperature	-10 ÷ 60 °C	
Storage temperature	-25 ÷ 70 °C	
Relative humidity	≤ 95 %	
Insulation	2.5 kV 60 sec.	
Reference standards	CEI-EN 61010-1	
	CEI-EN 61557-8	
	IEC 60364-7-710	
	UNE 20615	
	CEI-EN 61326-1	

Protection and safety

ISOLTESTER-DIG insulation monitoring devices



ISOLTESTER-DIG

Assuring operational continuity in medical environments, even in presence of first earthing fault, it's mandatory in operating theatre group 2 medical locations.
For this reason an IT distribution system with insulating transformer is used to supply medical equipment.

ISOLTESTER-DIG
ISOLTESTER range of insulation monitoring device allows IT-M network monitoring, assuring safety for patients and medical personnel avoiding supply interruption in case of first earthing fault according to IEC 60364-7-710 Standard.

The ISOLTESTER-DIG range assures safety to patients and medical personnel, signalling when a fault to earth occurs. Thanks to its innovative technology it is used to sense the insulation level of the network by far more efficiently compared to traditional insulation monitoring devices.

H+Line

Advanced features	Bbn 8012542	Order details		Price 1 piece	Weight 1 piece	Pack unit
	EAN	Type code	Order code		kg	pc.
	884507	ISOLTESTER-DIG-RZ	2CSM244000R1501		0.500	1
RS485, Max-Min values, Programmable relay	568339	ISOLTESTER-DIG-RS	2CSM256833R1521		0.500	1
RS485, Max-Min values, Programmable relay, Noise immunization (with codified signal)	884606	ISOLTESTER-DIG-PLUS	2CSM341000R1501		0.500	1

Protection and safety

SELVTESTER insulation monitoring devices for insulated networks at 24 V AC/DC



SELVTESTER

H+Line

Technical features

Network voltage and auxiliary power supply	24 V 50-60 Hz/DC ± 20 %
Max power dissipation	3 VA – 3 W
Measurement current	max. 0.5 mA
Internal impedance	50 kohm
Threshold	programmable to 10 ÷ 50 kohm (4 levels using microswitches)
Activation delay	about 1 second
Signals	led ON, led ALARM +, led ALARM -
Output	for up to 2 QSD-230/24-C, max. 24 V 1 A remote panels
Operating temperature	-10 ÷ 60 °C
Storage temperature	-20 ÷ 70 °C
Relative humidity	≤ 95 %
Insulation	2.5 kV 60 sec./4 kV imp. 1.2/50µs
Terminal cross-section	4 mm^2
Protection degree	IP20, IP40 when the cover is closed
Modules	3
Weight	200 g
Reference standards	IEC 60364-7-710, EN 61326-1, EN 61010-1

SELVTESTER for insulated networks at 24 V AC/DC

It is used to monitor permanently the insulation of safety extremely low voltage circuits (up to 24 V) especially scialitic lamps.

Function	Bbn 8012542	Order details		Price 1 piece	Weight 1 piece	Pack unit
	EAN	Type code	Order code		kg	pc.
Insulation monitoring	884705	SELVTESTER-24	2CSM211000R1511		0.250	1

Protection and safety

QSD remote signalling panel



QSD

H+Line

Technical features

Signals	Green LED network ON Red LED overload ALARM Yellow LED insulation ALARM intermittence 2 Hz dB ALARM, acoustic signaller, emission 2400 Hz
Buttons	TEST and MUTE buttons
Terminal cross-section	2.5 mm^2
Protection degree	IP30
Installation type	universal flush mounted box
Weight	200 g
Operating temperature	-10 ÷ 60 °C
Storage temperature	-25 ÷ +80 °C
Relative humidity	≤ 95 %
Insulation	2500 Vrms 50 Hz 60 s
Cables cross-section	0.35 mm^2 for 300 m
Compatibility	ISOLTESTER-DIG-RZ, ISOLTESTER-DIG-RS, ISOLTESTER-DIG, PLUS, SELVTESTER-24
Reference standards	safety EN 61010-1 product EN 61557-8/IEC 60364-7-710/ UNE 20615 electromagnetic compatibility EN 61326-1

QSD remote signalling panel

They are installed in combination with insulation monitoring devices, to remotely report the signals generated by these devices. They can be installed together with ISOLTESTER-DIG and SELVTESTER-24 and they are compatible also with former versions of insulating monitoring devices. Flush mounting box is already included in the packaging.

Version	Bbn 8012542	Order details		Price 1 piece	Weight 1 piece	Pack unit
	EAN	Type code	Order code		kg	pc.
Horizontal	730637	QSD-DIG 230/24	2CSM273063R1521		0.800	1
Vertical	570936	QSD-DIG 230/24 V	2CSM257093R1521		0.800	1

Protection and safety

TI switchboards and devices for medical locations



TI

H+Line

Technical characteristics

		TI 3 TI 3-S	TI 5 TI 5-S	TI 7.5 TI7.5-S	TI 10 TI 10-S
Power	[kVA]	3	5	7.5	10
Rated frequency	[Hz]	50-60			
Power dissipation	[W]	120	150	260	320
Electrical protection class		1			
Thermal insulation class	[°C]	B 130	B 130	F 155	F 155
Operating temperature	[°C]	max 40			
Primary winding voltage	[V]	230			
Secondary winding voltage	[V]	230			
No load current	[A]	< 0.39	< 0.65	< 0.98	< 1.3
Short circuit voltage drop		<3%			
Inrush current	[A]	< 221	< 369	< 553	< 738
Power loss	[W]	120	150	260	320
Winding separation		double insulation			
Metallic shield		■			
Reference standard		IEC-EN 61558-1, IEC-EN 61558-2-15, IEC-EN 62041			
Dimensions	[mm]	205x340x150	240x380x150	240x380x160	277x380x260

Insulating transformers for medical locations

Permanently connected to an IT power supply system, single-phase medical insulating transformers provide galvanic separation between the distribution network and the user load in accordance with IEC EN 61558-2-15 concerning power supply group 2 medical locations.

Rated oitput	PT100	Bbn 801254	Order details		Price 1 piece	Weight 1 piece	Pack unit
kVA		EAN	Type code	Order code		kg	pc.
3		2896005	TI 3	2CSM110000R1541		29.5	1
5		2896104	TI 5	2CSM120000R1541		44.0	1
7.5		2896203	TI 7.5	2CSM130000R1541		50.5	1
10		2521204	TI 10	2CSM140000R1541		73.0	1
3	■	2521402	TI 3-S	2CSM210000R1541		29.5	1
5	■	2521501	TI 5-S	2CSM220000R1541		44.0	1
7.5	■	2521600	TI 7.5-S	2CSM230000R1541		50.5	1
10	■	2521709	TI 10-S	2CSM240000R1541		73.0	1

Accessories

	Bbn 8012542	Order details		Price 1 piece	Weight 1 piece	Pack unit
	EAN	Type code	Order code		kg	pc.
Shock absorber	2557920	AMM	2CSM900000R1541		1	4

Protection and safety

QSO selection table

Series	Type	Power [kVA]	Installation type	IT-M section feeder lines	TN-S section feeder lines	PT100	OVR	Unifix L	I/O KNX	SELV 24 V line
S 	QSO 3S Classic	3	wall mounted	2x10A+5x16A +1x25A	-	■				
	QSO 5S Classic	5	wall mounted	2x10A+5x16A +1x25A	-	■				
	QSO 3S Premium	3	wall mounted	2x10A+5x16A +1x25A	1x10A+2x 16A	■				
	QSO 5S Premium	5	wall mounted	2x10A+5x16A +1x25A	1x10A+2x 16A	■				
M 	QSO 3M Classic	3	floor standing	3x10A+7x16A	1x10A	■				
	QSO 5M Classic	5	floor standing	3x10A+7x16A	1x10A	■				
	QSO 7.5M Classic	7.5	floor standing	3x10A+7x16A	1x10A	■				
	QSO 3M Premium	3	floor standing	6x10A+8x16A +1x25	1x10A+2x 16A	■	■			■
	QSO 5M Premium	5	floor standing	6x10A+8x16A +1x25	1x10A+2x 16A	■	■			■
	QSO 7.5M Premium	7.5	floor standing	6x10A+8x16A +1x25	1x10A+2x 16A	■	■			■
L 	QSO 10L Classic	10	floor standing	6x10A+9x16A	1x10A+2x 16A	■				
	QSO 7.5L Premium	7.5	floor standing	6x10A+11x16A +3x25A+1x32A	1x10A+2x 16A	■	■			■
	QSO 10L Premium	10	floor standing	6x10A+11x16A +3x25A+1x32A	1x10A+2x 16A	■	■		■	■

Protection and safety

QSO switchboards and components for medical locations



QSO

Technical features

	QSO wall type		QSO floor type	
Rated operational voltage (Ue)	230 V ~ ± 15%			
Rated frequency	50 - 60 Hz			
Number of phases	1 + N ~/PE			
Rated voltage of auxiliary service circuits	24 - 230 V ~			
Rated insulation voltage (Ui)	300 V - *2500 V			
Earthing system	TT/TN-S			
Maximum prospective short circuit current to the input terminals (Icc)	10 kA RMS Sym ***			
Max. altitude	2000 m a.s.l.			
Pollution degree	1 **			
Degree of protection against impacts (IK code) EN 50102 I	K 09 (5 kg - 200 mm)			
Degree of relative humidity at temperature °C	50 % with max. temp. +40 °C			
Operating temperature	-5 °C - +55 °C			
Storage temperature	-25 °C - +40 °C			
Protection degree EN 60529	QSO 3S Classic	IP 40	QSO 3M Classic	IP 54
	QSO 5S Classic	IP 40	QSO 5M Classic	IP 54
	QSO 3S Premium	IP 40	QSO 5M Premium	IP 54
	QSO 5S Premium	IP 40	QSO 7.5M Premium	IP 54
			QSO 10L Classic	IP 54
			QSO 7.5L Premium	IP 54
			QSO 10L Premium	IP 54

* Dielectric strength test voltage.
** Corresponds to no pollution or only dry and non-conductive pollution.
*** Value conditioned by upstream coordination with NH 00 100A gL-gG fuses

Protection and safety

QSO switchboards and components for medical locations



QSO S



QSO M



QSO L

Electrical switchboard for medical locations

QSO switchboards for operating theatres represent the ideal solution for distribution within group 2 medical locations, in compliance with the requirements of IEC standard 64-8/7-710. Three series are available: S, M and L. Each one can be customized with two layouts. The CLASSIC version contains the instrumentation essential for protection against direct contacts, while the PREMIUM version also has, depending on the type of switchboard, additional devices intended for:

- emergency power cut-off of operating theatre circuits outside of the patient area (lighting, radiology sockets, etc.)
- 24 V SELV line for supplying scialytic lamps
- overvoltage protection
- Unifix L fast-wiring system
- I/O module for managing xon alarms through KNX protocol

ABB provides, for its switchboards for operating theatres, the declaration of conformity required to commission the system, ensuring the installer that the system is built in compliance with technical standards. To ensure the best efficiency of the QSO will be delivered in a new wooden packing.

S series switchboards for medical locations

Applications: surgery clinics, post-op recovery rooms, analysis laboratories, dental offices, veterinary clinics

Power	Installation type	TN-S section feeder lines	IT-M section feeder lines	Bbn 801254	Order details		Price 1 piece	Weight 1 piece	Pack unit
kVA				EAN	Type code	Order code		kg	pc.
3	wall mounted		2x10A +5x16A +1x25A	2611226	QSO 3S Classic	2CSM261122R1551		73	1
5	wall mounted		2x10A +5x16A +1x25A	2736929	QSO 5S Classic	2CSM273692R1551		87.5	1
3	wall mounted	1x10A +2x16A	2x10A +5x16A +1x25A	2736028	QSO 3S Premium	2CSM273602R1551		75	1
5	wall mounted	1x10A +2x16A	2x10A +5x16A +1x25A	2736820	QSO 5S Premium	2CSM273682R1551		90	1

M series switchboards for medical locations

Applications: Day hospital rooms, medium sized operating theatres, ICU rooms

Power	Installation type	TN-S section feeder lines	IT-M section feeder lines	Bbn 801254	Order details		Price 1 piece	Weight 1 piece	Pack unit
kVA				EAN	Type code	Order code		kg	pc.
3	floor standing	1x10A	3x10A +7x16A	2735922	QSO 3M Classic	2CSM273592R1551		126	1
5	floor standing	1x10A	3x10A +7x16A	2736721	QSO 5M Classic	2CSM273672R1551		141	1
7.5	floor standing	1x10A	3x10A +7x16A	2735823	QSO 7.5M Classic	2CSM273582R1551		147.5	1
3	floor standing	1X10A +2x16A	6x10A +8x16A +1x25A	2736622	QSO 3M Premium	2CSM273662R1551		127	1
5	floor standing	1X10A +2x16A	6x10A +8x16A +1x25A	2735724	QSO 5M Premium	2CSM273572R1551		142	1
7.5	floor standing	1X10A +2x16A	6x10A +8x16A +1x25A	2736523	QSO 7.5M Premium	2CSM273652R1551		147.5	1

Protection and safety

QSO switchboards and components for medical locations

L series switchboards for medical locations

Applications: operating theatres, intensive care rooms, cardiac operating rooms

Power	Instal-lation type	TN-S section feeder lines	IT-M section feeder lines	Bbn 801254	Order details		Price 1 piece	Weight 1 piece	Pack unit
kVA				EAN	Type code	Order code		kg	pc.
10	floor standing	1x10A +2x16A	6x10A +9x16A	2735625	QSO 10L Classic	2CSM273562R1551		190	1
7.5	floor standing	1x10A +2x16A	6x10A +11x16A +3x25A +1x32A	2736424	QSO 7.5L Premium	2CSM273642R1551		168	1
10	floor standing	1x10A +2x16A	6x10A +11x16A +3x25A +1x32A	2735526	QSO 10L Premium	2CSM273552R1551		193.5	1

Notes