K3G200-BD64-04

EC diagonal module

backward curved, single inlet

with support bracket



ebm-papst Mulfingen GmbH & Co. KG
Bachmühle 2 · D-74673 Mulfingen
Phone +49 7938 81-0
Fax +49 7938 81-110
info1@de.ebmpapst.com
www.ebmpapst.com

Limited partnership · Headquarters Mulfingen
County court Stuttgart · HRA 590344

General partner Elektrobau Mulfingen GmbH · Headquarters Mulfingen
County court Stuttgart · HRB 590142

Nominal data

Type	**K3G200-BD64-04**
Motor	**M3G074-CF**

Nominal voltage	VDC	48
Nominal voltage range	VDC	36 .. 57
Type of data definition		fa
Speed (rpm)	min^{-1}	4875
Power input	W	275
Current draw	A	5.8
Min. ambient temperature	°C	-25
Max. ambient temperature	°C	60

ml = Max. load · me = Max. efficiency · fa = Running at free air · cs = Customer specs · cu = Customer unit
Subject to alterations

Data in accordance with ecodesign regulation EU 327/2011 (prEN 17166)

		Actual	Request 2015
01 Overall efficiency η_{es}	%	49.5	34.1
02 Measurement category		A	
03 Efficiency category		Static	
04 Efficiency grade N		65.4	50
05 Variable speed drive		Yes	

09 Power input P_e	kW	0.3
09 Air flow q_v	m^3/h	900
09 Pressure increase p_{fs}	Pa	541
10 Speed (rpm) n	min^{-1}	4760
11 Specific ratio*		1.01

Data definition with optimum efficiency.

* Specific ratio = 1 + p_{fs} / 100 000 Pa

LU-154774

The indicated efficiency values for obtaining conformity with the Ecodesign Directive EU 327/2011 were achieved with defined air conduction components (e.g. inlet nozzles).
The dimensions are to be requested from ebm-papst. If other air guide geometries are used on the installation side, the ebm-papst evaluation loses its validity/conformity must be confirmed again.

The product does not fall within the scope of Regulation (EU) 2019/1781 due to the exception specified in Article 2(2a) (motors completely integrated into a product).

EC diagonal module

backward curved, single inlet

with support bracket

Technical features

Mass	2.26 kg
Size	200 mm
Motor size	74
Surface of rotor	Coated in black
Material of impeller	PA plastic
Housing material	PA plastic
Material of support bracket	PA plastic
Number of blades	7
Direction of rotation	Clockwise, seen on rotor
Type of protection	IP44; Depending on installation and position
Insulation class	"B"
Humidity (F) / environmental protection class (H)	H1+
Max. permissible ambient motor temp. (transp./ storage)	+80 °C
Min. permissible ambient motor temp. (transp./storage)	-40 °C
Mounting position	Any
Condensation drainage holes	None
Operation mode	S1
Motor bearing	Ball bearing
Technical features	- Tach output - Motor current limit - Soft start - Control input 0-10 VDC / PWM - Overvoltage detection - Reverse polarity protection
EMC interference immunity	Acc. to EN 61000-6-2 (industrial environment)
EMC interference emission	Acc. to EN 55022 (Class B, household environment)
Cable exit	Lateral
Safety classification	III; Requires supply with safety extra-low voltage SELV. This component to be built-in can have several local protection class ratings. The specification refers to the basic design of this component. The final protection class is based on the intended installation and connection of the component.
Product conforming to standard	EN 60034-1; EN 60204-1; EN 60335-1; CE
Standard conformity	UKCA
Approval	CCC; EAC

ebm-papst Mulfingen GmbH & Co. KG · Bachmühle 2 · D-74673 Mulfingen · Phone +49 (0) 7938 81-0 · Fax +49 (0) 7938 81-110 · info1@de.ebmpapst.com · www.ebmpapst.com

EC diagonal module

backward curved, single inlet

with support bracket

Product drawing

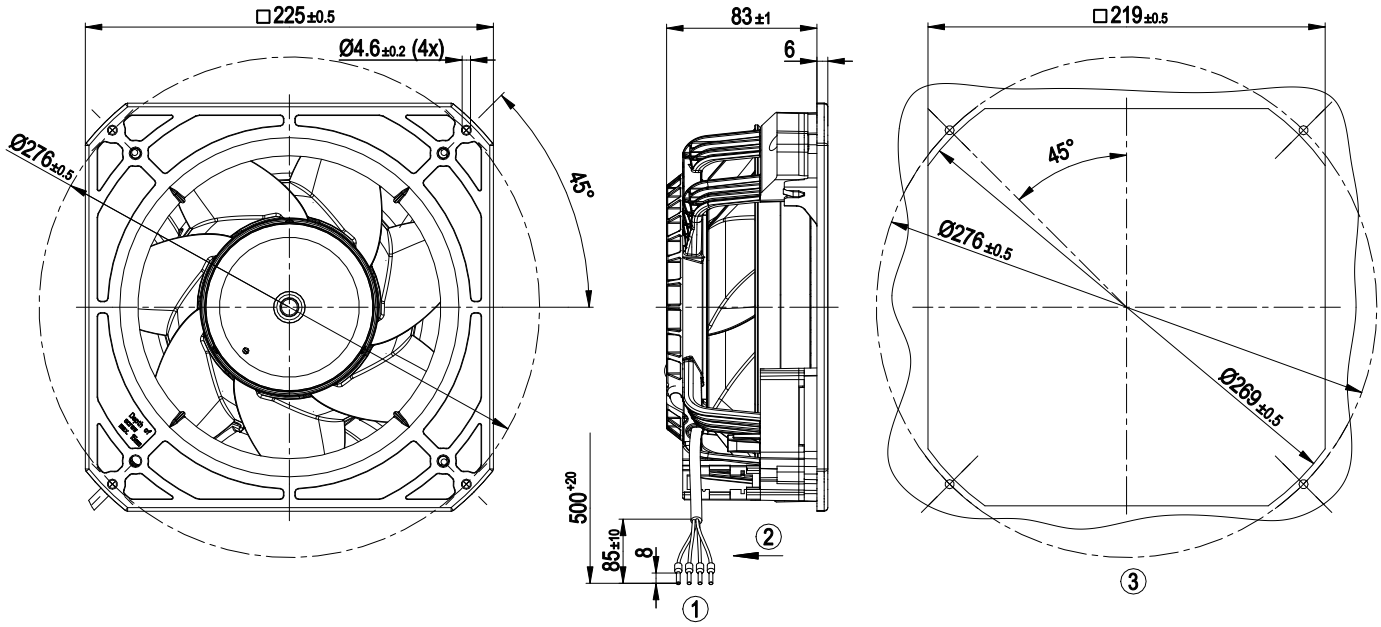

1	Connection line PVC AWG16, 4x crimped core-end sleeves
2	Direction of airflow "V"
3	Mounting dimensions

ebm-papst Mulfingen GmbH & Co. KG · Bachmühle 2 · D-74673 Mulfingen · Phone +49 (0) 7938 81-0 · Fax +49 (0) 7938 81-110 · info1@de.ebmpapst.com · www.ebmpapst.com

EC diagonal module

backward curved, single inlet

with support bracket

Connection screen

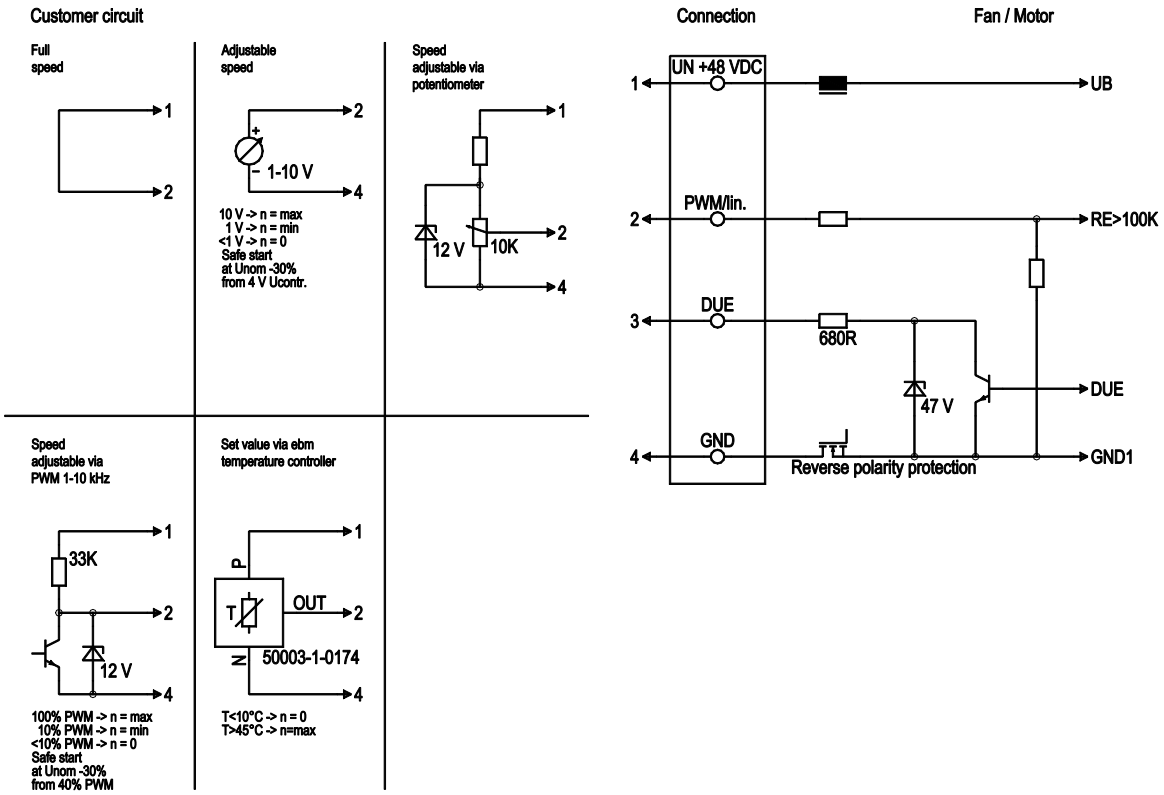

No.	Conn.	Designation	Colour	Function / assignment
	1	Un +48 VDC	red	Power supply 48 VDC, residual ripple 3.5 %
	2	0-10 VDC	yellow	Control input Re>100 K
	3	Tach	white	Speed monitoring output, 3 pulses per revolution, Isink max = 10 mA
	4	GND	blue	Reference mass

ebm-papst Mulfingen GmbH & Co. KG · Bachmühle 2 · D-74673 Mulfingen · Phone +49 (0) 7938 81-0 · Fax +49 (0) 7938 81-110 · info1@de.ebmpapst.com · www.ebmpapst.com

EC diagonal module

backward curved, single inlet

with support bracket

Charts: Air flow

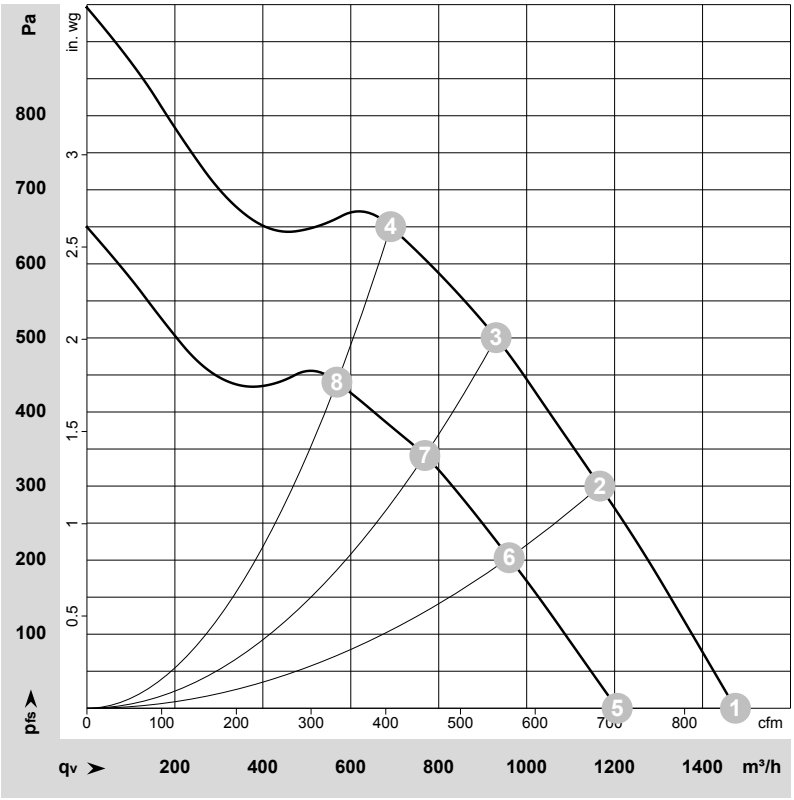

ρ = 1.15 kg/m³ ± 2 %

Measurement: LU-160650-1
Measurement: LU-160692-1

Air performance measured as per ISO 5801 Installation category A. For detailed information on the measuring set-up, please contact ebm-papst. Suction-side noise levels: LwA measured as per ISO 13347 / LpA measured with 1m distance to fan axis. The values given are valid under the measuring conditions mentioned above and may vary according to the actual installation situation. With any deviation from the standard set-up, the specific values have to be checked and reviewed with the unit installed.

Measured values

	U	n	P_{ed}	I	LpA_{in}	LwA_{in}	q_V	p_{fs}	q_V	p_{fs}
	V	min^{-1}	W	A	dB(A)	dB(A)	m^3/h	Pa	cfm	in. wg
1	48-57	4875	275	5.80*	77	85	1475	0	870	0.00
2	48-57	4745	299	6.30*	74	82	1165	300	685	1.20
3	48-57	4715	306	6.40*	74	82	930	500	545	2.01
4	48-57	4740	303	6.30*	76	84	690	650	405	2.61
5	36	4010	154	4.28			1205	0	710	0.00
6	36	3915	168	4.67			960	203	565	0.81
7	36	3900	172	4.78			770	343	450	1.38
8	36	3910	170	4.72			570	440	335	1.77

U = Supply voltage · n = Speed (rpm) · P_{ed} = Power input · I = Current draw · * = Current measured at rated voltage · LpA_{in} = Sound pressure level inlet side · LwA_{in} = Sound power level inlet side
q_V = Air flow · p_{fs} = Pressure increase

ebm-papst Mulfingen GmbH & Co. KG · Bachmühle 2 · D-74673 Mulfingen · Phone +49 (0) 7938 81-0 · Fax +49 (0) 7938 81-110 · info1@de.ebmpapst.com · www.ebmpapst.com