Lovato

Mechanical reset buttons, complete unit, spring return

Flush (5.2mm/0.2" stroke). Adjustable length 0-150mm/5.9".
Complete with shaft (without mounting adapter). Spring return.

LPC R1196❶	Blue (RESET)

❶ With "RESET" caption on actuator.



LPC R1196

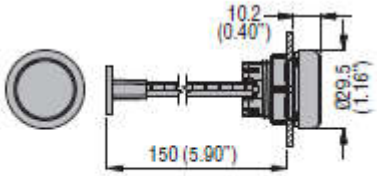

Flush
LPC R1...

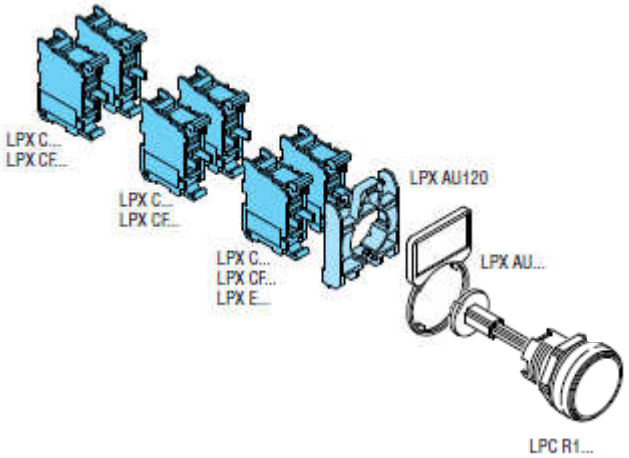

Drilling - Minimum recommended distances

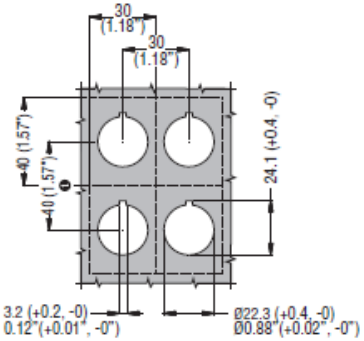

Operational characteristics

- Ambient conditions:
  - Operating temperature: -25...+70°C
  - Storage temperature: -40...+85°C
- Any mounting position is allowed.
- Degree of protection:
  - Per IEC/EN: IP66, IP67 and IP69K
  - Per UL: type 1, 2, 3R, 4, 4X, 12, 12K.

Materials

Polyamide.

Mechanical endurance

Operating force: <0.5kg / 1.1lb (actuator).
Mechanical life: 5,000,000 cycles.

Mounting adapter

Type: LPX AU120.
Actuators are installed through a Ø22mm/Ø0.89in drilling with a threaded fixing ring (Tmax = 2.3Nm / 1.69lbft).
The mounting adapter directly snaps onto the actuator.

Contact elements

Type: LPX C10 (1NO)
LPX CF10 (1NO Faston)
LPX C10A (1EM)
LPX C01 (1NC)
LPX CF01 (1NC Faston)
LPX C01D (1LB)

Contact elements snap onto the mounting adapter.
Up to 9 contact elements can be fitted on the mounting adapter: 3 on the left, 3 at the centre and 3 on the right; one on top of the other.
To mount contact elements in the centre position, use the accessory: LPX A140; see page 7-17.

Certifications and compliance

Certifications obtained: UL Listed, for USA and Canada, (File E93601), as Auxiliary Devices.
Certifications pending at time of catalogue printing: CCC.
Compliant with standards: IEC/EN 60947-1, IEC/EN 60947-5-1, UL508, CSA C22.2 n° 14.