AV series

Security pushbutton switches • Ø 19 or 22 mm • momentary NO



DISTINCTIVE FEATURES

Momentary (NO)
Momentary (NC) and alternate action also available
Long life
UL-CSA approved (long case only)
Marking available



ENVIRONMENTAL SPECIFICATIONS

- Optional front panel sealing : IP65 according to IEC 60529
- Operating temperature : -30 °C to +70 °C (-22 °F to +158 °F)

ELECTRICAL SPECIFICATIONS

- Max. current/voltage rating with resistive load :
  - A contacts : 4 A 12 VDC, 500,000 cycles
  - C contacts : 2 A 48 VDC, 10,000 cycles
- Approved ratings of models with long case and A contacts (AV..000) :
  UL-CSA : 4 A 250 VAC - 8 A 125 VAC - 6,000 cycles
- Initial contact resistance : 50 mΩ max.
- Insulation resistance : 1,000 MΩ min. at 500 VDC
- Dielectric strength :
  2,000 Vrms 50 Hz min. between terminals and frame
  2,000 Vrms 50 Hz min. between terminals

GENERAL SPECIFICATIONS

- Torque : 1.5 Nm min.- 4 Nm max. applied to nut
- Panel thickness : 1 (.039) to 11 mm (.433) max.
- Low level or mechanical life : 1,000,000 cycles
- Hand soldering : 300 °C (572 °F), 3 sec. max.

MATERIALS

- Case : PBT
- Contacts : silver (A) or brass, silver plated (C)
- Bushing and actuator : see following pages

The company reserves the right to change specifications without notice.

AV series

Security pushbutton switches •
Ø 19 or 22 mm • momentary NO

AGENCY APPROVAL

4 A 250 VAC /8 A 125 VAC
(long case only)

To order switches marked UL-CSA,
add “UU“ at the end of model number.

ELECTRICAL FUNCTIONS

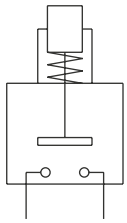

Function 3 (NO)

PANEL MOUNTING

- Panel cut-out :Ø 19,2 mm (.755) or Ø 22.2 mm (.874)
- Min. pitch for matrix mounting :
  30 mm x 30 mm (1.181x1.181)

AV series

Security pushbutton switches • Ø 19 or 22 mm • momentary NO

BUILD YOUR PART NUMBER

BASIC PART NUMBER

AV — SERIES

BUSHING/ACTUATOR CONFIGURATIONS

Models Ø 19 (.748)

09	Flat actuator
19	Curved actuator

Models Ø 22 (.866)

03	Flat actuator
02	Curved actuator

CASE

000	Long
100	Short

FUNCTION

3	NO

CONTACTS

A	Silver
C	Brass, silver plated

TERMINALS

9	Screw
2	Solder lug/ quick-connect

OPTIONS

BUSHING/ACTUATOR MATERIALS

Flat or curved metal actuator

00 (std)	Nickel plated brass / Nickel plated brass
10	Nickel plated brass / Stainless steel
20	Chrome plated brass / Chrome plated brass
30	Chrome plated brass / Stainless steel
40	Stainless steel / Stainless steel
50	Stainless steel / Nickel plated brass
70	Black chrome plated brass / Black chrome plated brass

Flat thermoplastic actuator bushing

0• (std)	Nickel plated brass
2•	Chrome plated brass
8•	Varnished polished brass

Replace • with actuator color (see following pages).

SEALING

Blank	No sealing
K	Sealed to IP65

AGENCY APPROVAL

UU	UL Availability : models with long case only.

ABOUT THIS SERIES

On the following pages, you will find successively basic part numbers of switches and options in the same order as in above chart.

Notice: please note that not all combinations of above numbers are available. Refer to the following pages for further information.

Mounting accessories: standard hardware supplied : 1 hex nut. Standard and special hardware is presented in the "Hardware" section of website.

AV series

Security pushbutton switches • Ø 19 or 22 mm • momentary NO

BUSHING Ø 19 (.748) - FLAT ACTUATOR SHORT CASE - 48 VDC



Screw terminals

AV091003•9



Solder lug / quick-connect term.

AV091003•2



• Contacts. Replace with A or C.

Hex nut 22 (.866) across flats

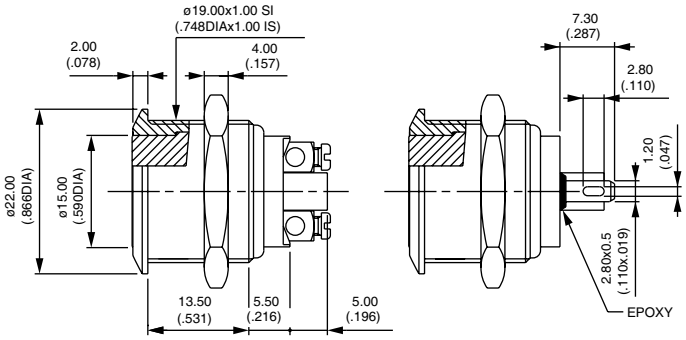

BUSHING Ø 19 (.748) - CURVED ACTUATOR SHORT CASE - 48 VDC



Screw terminals

AV191003•9



Solder lug / quick-connect term.

AV191003•2



• Contacts. Replace with A or C.

Hex nut 22 (.866) across flats

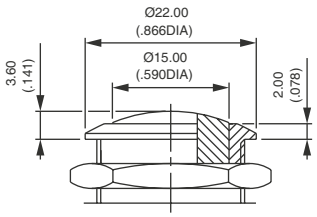

BUSHING Ø 19 (.748) - FLAT ACTUATOR LONG CASE- 4 A 250 VAC/8 A 125 VAC - UL/CSA



Screw terminals

AV090003A9



To order switches marked UL-CSA, add "UU" at the end of model number.

Hex nut 22 (.866) across flats

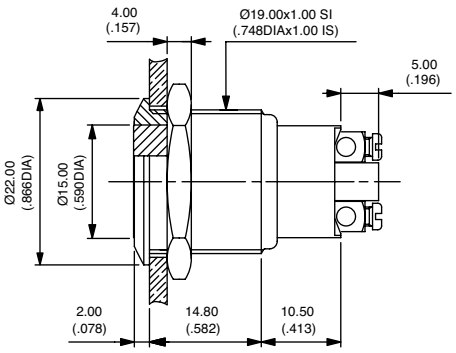

BUSHING Ø 19 (.748) - CURVED ACTUATOR LONG CASE - 4 A 250 VAC/8 A 125 VAC - UL/CSA



Screw terminals

AV190003A9



To order switches marked UL-CSA, add "UU" at the end of model number.

Hex nut 22 (.866) across flats

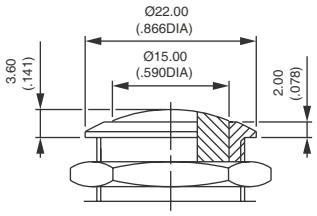

Screw terminals for wires 1.5 mm² max.

AV series

Security pushbutton switches • Ø 19 or 22 mm • momentary NO

BUSHING Ø 22 (.866) - FLAT ACTUATOR SHORT CASE - 48 VDC



Screw terminals

AV031003•9



Solder lug / quick-connect term.

AV031003•2



• Contacts. Replace with A or C.

Hex nut 25 (.984) across flats

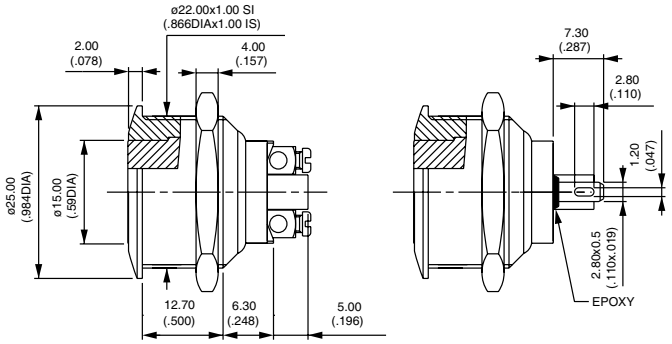

BUSHING Ø 22 (.866) - CURVED ACTUATOR SHORT CASE - 48 VDC



Screw terminals

AV021003•9



Solder lug / quick-connect term.

AV021003•2



• Contacts. Replace with A or C.

Hex nut 25 (.984) across flats

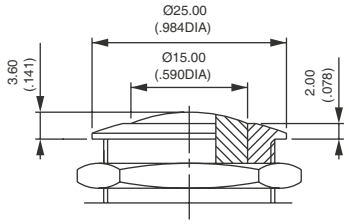

BUSHING Ø 22 (.866) - FLAT ACTUATOR LONG CASE - 4 A 250 VAC/8 A 125 VAC - UL/CSA



Screw terminals

AV030003A9



To order switches marked UL-CSA, add “UU” at the end of model number.

Hex nut 25 (.984) across flats

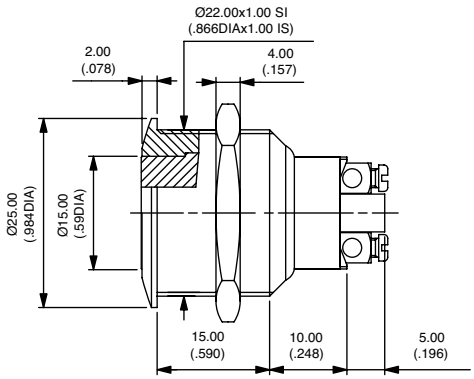

BUSHING Ø 22 (.866) - CURVED ACTUATOR LONG CASE - 4 A 250 VAC/8 A 125 VAC - UL/CSA



Screw terminals

AV020003A9



To order switches marked UL-CSA, add “UU” at the end of model number.

Hex nut 25 (.984) across flats

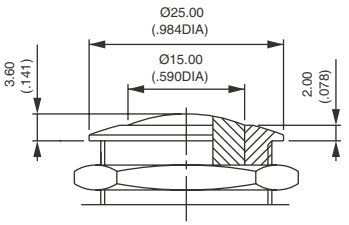

Screw terminals for wires 1.5 mm² max.

AV series

Security pushbutton switches • Ø 19 or 22 mm • momentary NO

BUSHING Ø 22 (.866) - MOMENTARY, NORMALLY CLOSED

- Single pole, screw terminals, without marking
- Silver plated copper contacts (C)
- Max. current/voltage rating with resistive load :
  2 A 250 VAC - 3 A 125 VAC - 2.5 A 24 VDC
- Dielectric strength :
  2,000 Vrms 50 Hz min. betw. terminal and frame
  2,000 Vrms. 50 Hz min. between terminals
- Electrical life : 100,000 cycles at 0.3 A 24 VAC or DC
  10,000 cycles at full load

Flat actuator	Curved actuator
AV031202C9	AV021202C9

Hex nut 25 (.984) across flats

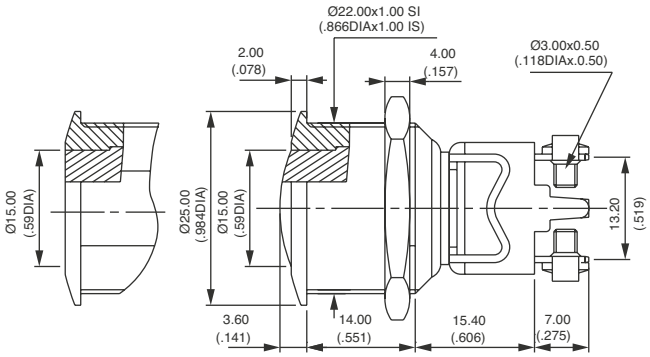

BUSHING Ø 22 (.866) - ALTERNATE ACTION

- Double pole, solder lug/quick-connect terminal, curved actuator
- Silver contacts
- Max. current/voltage rating with resistive load :
  3 (1.5) A 250 VAC - 6 A 125 VAC - 3 A 24 VAC or DC
- Dielectric strength : 3,000 Vrms min. between terminals and frame
- Electrical life : 10,000 cycles at full load
  50,000 cycles at 1 A 24 VAC or DC
- Mechanical life : 100,000 cycles

AV044746A2	ON	- ON

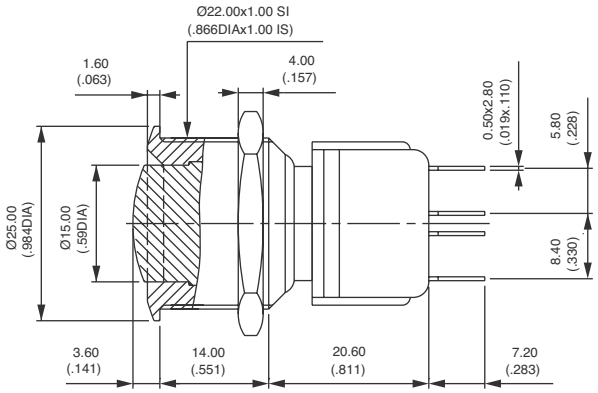

For further scpecificarions, see previous pages

BUSHING/ACTUATOR MATERIALS

BASIC P/N

FLAT OR CURVED METAL ACTUATOR

CODE	BUSHING	ACTUATOR
00 (std)	Nickel plated brass	Nickel plated brass
10	Nickel plated brass	Stainless steel
20	Chrome plated brass	Chrome plated brass
30	Chrome plated brass	Stainless steel
40	Stainless steel	Stainless steel
50	Stainless steel	Nickel plated brass
70	Black chrome plated brass	Black chrome plated brass

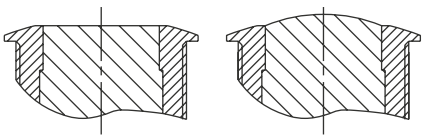

AV series

Security pushbutton switches • Ø 19 or 22 mm • momentary NO

BUSHING/ACTUATOR MATERIALS (CONTINUED)

BASIC P/N

FLAT THERMOPLASTIC ACTUATOR

CODE	BUSHING	ACTUATOR
0• (std)	Nickel plated brass	Replace • with one of the following codes : **1** : blue - **1/4** : dark blue - **2** : black - **3** : green - **4** : grey - **5** : yellow - **6** : red - **7/1**: white - **9** : orange
2•	Chrome plated brass	
8•	Varnished polished brass	

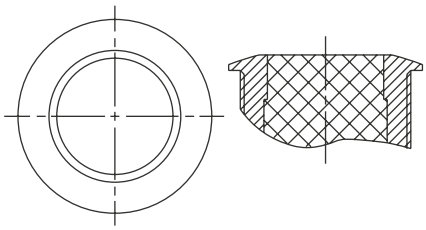

MARKING

BASIC P/N

For **flat or curved actuator:** by laser etching on non-illuminated brass or stainless steel actuator.

For **flat actuator:** by hot stamping on thermoplastic insert (illuminated actuators). Not available for **AV031202C9** and **AV044746A2.**

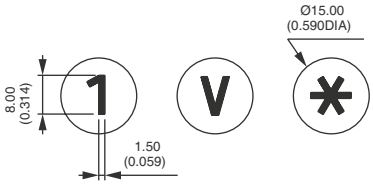

Select an option from each of the two paragraphs opposite (Type /Color).

TYPE OF MARKING

0 to 9	Numbers 0 to 9
X	Symbol *
Y	Symbol #
A to N	Letters A to N
P to W	Letters P to W
0	Letter O

Letter O : same code and same design as number 0.
For special symbols, consult factory.
Minimum order : 500 pieces

COLOR OF MARKING

Brass actuator

0 (std)	Same as finish
2	Black

Note : a finished product supplied in version “0” cannot be modified to version "2".

Thermoplastic actuator

2	Black
7	White

SEALING

BASIC P/N

Blank	No sealing
K	Front panel sealing to IP65

OPTION K

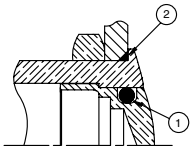

① - internal gasket

② - external gasket