finder
SWITCH TO THE FUTURE

Surge Protection Devices (SPD)

7P
SERIES



- Panels for electrical distribution
- Control panels
- Surge protection
- Road / tunnel lighting
- Elevators and lifts

FINDER reserves the right to alter characteristics at any time without notice. FINDER assumes no liability for damage to persons or property, caused as a result of the incorrect use or application of its products.

SPD Type 1+2 Surge arrester range high discharge capability with no following current - single/three phase systems

- Surge arresters, suitable for low-voltage applications, to protect equipment against overvoltage by direct lightning strike, induced overvoltage and switching overvoltage
- To be installed at the boundary of LPZ 0 - LPZ 1 zones or higher
- Versions with combination of varistor and high-performance spark gap (GDT) ensures:
  - high discarge current
  - high insulation resistance that eliminates leakage current
  - no following current
- Very low residual voltage
- Replaceable modules
- Upside down mounting possible (thanks to dual terminal markings and new restraint system for the replaceable module that permits its inversion)
- Visual fault signalling: Healthy/Replace
- Double screw terminal
- Remote status signalling contact: Healthy/Replace/Presence. Connector 07P.01 included
- According to EN 61 643-11
- 35 mm rail EN 60715 mounting, 36 mm each pole

7P.09.1.255.0100 SPD Type 1, GDT protection for N-PE application only, for 3+1 configuration

7P.01.8.260.1025 SPD Type 1+2, varistor + GDT unipolar protection suitable to realize single phase or three phase systems (230/400 V) with the GDT protection module (7P.09)

7P.02.8.260.1025 SPD Type 1+2 for single phase TT and TN-S system. Varistor + GDT protection L-N + GDT protection N-PE

For outline drawing see page 20

		7P.09.1.255.0100	**7P.01.8.260.1025**	**7P.02.8.260.1025**
				
		• SPD Type 1 • Spark gap module for N-PE application in three phase system, 3+1 configuration • Remote contact signalling of GDT presence • Upside down mounting possible • Replaceable modules	• SPD Type 1+2 • Combination of varistor and encapsulated spark gap (for single or three phase systems) • Visual fault and remote contact fault signalling varistor/GDT status • Upside down mounting possible • Replaceable modules	• SPD Type 1+2 • Combination of varistor and encapsulated spark gap (for single phase systems) • Visual fault and remote contact fault signalling varistor/GDT status, N-PE GDT presence • Upside down mounting possible • Replaceable modules
		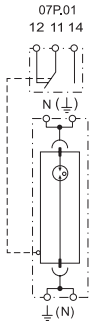	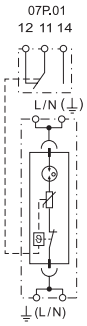	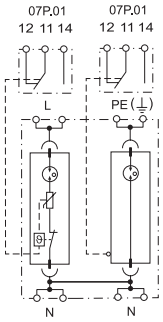
SPD specification		**N-PE**		**L-N** / **N-PE**
Nominal voltage (U_N)	V AC	—	230	230 / —
Maximum operating voltage (U_C)	V AC	255	260	260 / 255
Lightning impulse current (10/350 µs) (I_{imp})	kA	100	25	25 / 50
Nominal discharge current (8/20 µs) (I_n)	kA	100	30	30 / 50
Maximum discharge current (8/20 µs) (I_{max})	kA	100	60	60 / 100
Total discharge current (10/350 µs) (I_{total})	kA	100	25	50 / 50
Voltage protection level (U_p)	kV	1.5	1.5	1.5 / 1.5
Ability to independently switch off the following current (I_{fi})	A	100	No following current	No following current / 100
I_{PE}	uA	< 4	< 4	< 4
TOV 120 min L-N	V AC	—	440	440 / —
TOV 5 s L-N	V AC	—	335	335 / —
TOV 200 ms N-PE	V AC	1200	—	— / 1200
Response time (t_a)	ns	100	100	100 / 100
Short-circuit proof at maximum overcurrent protection - I_{SSCR}	kA_{rms}	—	50	50 / —
Maximum overcurrent protection (fuse rating gL/gG)	A	—	250	250 / —
Maximum overcurrent protection for serial connection, gL/gG	A	—	125	125 / —
Replacement module code		7P.00.1.000.0100	7P.00.8.260.0025	7P.00.8.260.0025 / 7P.00.1.000.0050
Other technical data				
Ambient temperature range	°C	–40…+80		
Protection degree		IP 20		
Wire size		solid cable		stranded cable
	mm^2	1 x 2.5…1 x 50		1 x 2.5…1 x 35
	AWG	1 x 13…1 x 1		1 x 13…1 x 2
Wire strip length	mm	11		
Screw torque	Nm	4		
Remote status signalling contact specification				
Contact configuration		1 CO (SPDT)	1 CO (SPDT)	1 CO (SPDT)
Rated current	A AC/DC	0.5/0.1	0.5/0.1	0.5/0.1
Rated voltage	V AC/DC	250/30	250/30	250/30
Wire size (07P.01)		solid cable / stranded cable	solid cable / stranded cable	solid cable / stranded cable
	mm^2	1.5 / 1.5	1.5 / 1.5	1.5 / 1.5
	AWG	16 / 16	16 / 16	16 / 16
Approvals (according to type)				

SPD Type 1+2 Surge arrester range - three phase high discharge capability with no following current - system (230/400 V)

- Surge arresters, suitable for low-voltage applications, to protect equipment against overvoltage by direct lightning strike, induced overvoltage and switching overvoltage
- To be installed at the boundary of LPZ 0 - LPZ 1 zones or higher
- Combined high energy varistor block and high-performance spark gap (GDT) ensures:
  - high discarge current
  - high insulation resistance that eliminates leakage current
  - no following current
- Very low residual voltage
- Replaceable modules
- Upside down mounting possible (thanks to dual terminal markings and new restraint system for the replaceable module that permits its inversion)
- Visual fault signalling: Healthy/Replace
- Double screw terminal
- Remote status signalling contact: Healthy/Replace/Presence. Connector 07P.01 included
- According to EN 61 643-11
- 35 mm rail EN 60715 mounting, 36 mm each pole

7P.03.8.260.1025 SPD Type 1+2 for three phase TN-C system without Neutral (PEN conductor). Varistor + GDT protection L1, L2, L3-PEN

7P.04.8.260.1025 SPD Type 1+2 for three phase TT and TN-S system with Neutral. Varistor + GDT protection L1, L2, L3-N + spark gap protection N-PE

7P.05.8.260.1025 SPD Type 1+2 for three phase TN-S system with Neutral. Varistor + GDT protection L1, L2, L3-N + varistor + GDT protection N-PE

For outline drawing see page 20, 22

	7P.03.8.260.1025	7P.04.8.260.1025	7P.05.8.260.1025
			
	• SPD Type 1+2 • 3 x combined varistor and encapsulated spark gap • Visual fault and remote contact fault signalling varistor/GDT status • Upside down mounting position • Replaceable modules	• SPD Type 1+2 • 3 x combined varistor and encapsulated spark gap + 1 encapsulated spark gap • Visual fault and remote contact fault signalling varistor/GDT status, N-PE GDT presence • Upside down mounting position • Replaceable modules	• SPD Type 1+2 • 4 x combined varistor and encapsulated spark gap • Visual fault and remote contact fault signalling varistor/GDT status • Upside down mounting position • Replaceable modules
	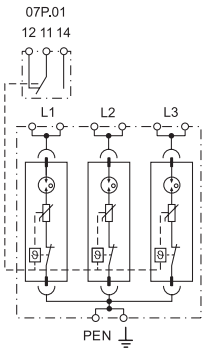	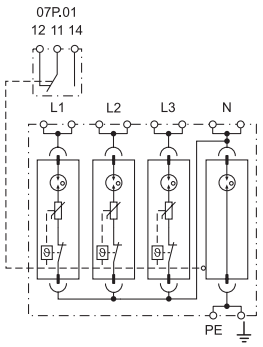	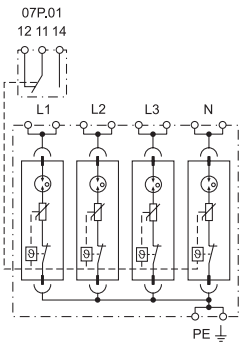

SPD specification		**L-PEN**	**L-N**	**N-PE**	**L, N-PE**
Nominal voltage (U_N)	V AC	230	230	—	230
Maximum operating voltage (U_C)	V AC	260	260	255	260
Lightning impulse current (10/350 µs) (I_{imp})	kA	25	25	100	25
Nominal discharge current (8/20 µs) (I_n)	kA	30	30	100	30
Maximum discharge current (8/20 µs) (I_{max})	kA	60	60	100	60
Total discharge current (10/350 µs) (I_{total})	kA	75	100	100	100
Voltage protection level (U_P)	kV	1.5	1.5	1.5	1.5
Ability to independently switch off the following current (I_{fi})	A	No following current	No following current	100	No following current
I_{PE}	uA	< 4	< 4		< 4
TOV 120 min L-N	V AC	440	440	—	440
TOV 5 s L-N	V AC	335	335	—	335
TOV 200 ms N-PE	V AC	—	—	1200	—
Response time (t_a)	ns	100	100	100	100
Short-circuit proof at maximum overcurrent protection - I_{SSCR}	kA_{rms}	50	50	—	50
Maximum overcurrent protection (fuse rating gL/gG)	A	250	250	—	250
Maximum overcurrent protection for serial connectiong, gL/gG	A	125	125	—	125
Replacement module code		7P.00.8.260.0025	7P.00.8.260.0025	7P.00.1.000.0100	7P.00.8.260.0025
Other technical data					
Ambient temperature range	°C	–40…+80			
Protection degree		IP 20			
Wire size		solid cable		stranded cable	
	mm^2	1 x 2.5…1 x 50		1 x 2.5…1 x 35	
	AWG	1 x 13…1 x 1		1 x 13…1 x 2	
Wire strip length	mm	11			
Screw torque	Nm	4			
Remote status signalling contact specification					
Contact configuration		1 CO (SPDT)	1 CO (SPDT)		1 CO (SPDT)
Rated current	A AC/DC	0.5/0.1	0.5/0.1		0.5/0.1
Rated voltage	V AC/DC	250/30	250/30		250/30
Wire size (07P.01)		solid cable / stranded cable	solid cable / stranded cable		solid cable / stranded cable
	mm^2	1.5 / 1.5	1.5 / 1.5		1.5 / 1.5
	AWG	16 / 16	16 / 16		16 / 16
Approvals (according to type)					

X-2021, www.findernet.com

SPD Type 1+2 Compact Surge arrester range with no leakage current for single and three phase systems (230/400 V)

- Surge arresters, suitable for low-voltage applications, to protect equipment against overvoltage by direct lightning strike, induced overvoltage and switching overvoltage
- To be installed at the boundary of LPZ 0 - LPZ 1 zones or higher
- Combined high energy varistor block and high-performance spark gap (GDT) ensures:
  - no leakage current
  - galvanic insulation between phases
  - no following current
- Very low residual voltage
- Replaceable modules with retaining system
- Visual fault signalling: Healthy/Replace
- Double screw terminal
- Remote status signalling contact option available: Healthy/Replace/Presence
- According to EN 61643-11+A1:2018 , IEC 61643-11 Ed.2011
- 35 mm rail EN 60715 mounting, 36 mm each pole

7P.02.8.275.1012 SPD Type 1+2 for single phase TT (TN-S) system with Neutral. Varistor + GDT protection L-N + GDT protection N-PE

7P.04.8.275.1012 SPD Type 1+2 for three phase TT (TN-S) system with Neutral. Varistor + GDT protection L1, L2, L3-N + spark gap protection N-PE

7P.05.8.275.1012 SPD Type 1+2 for three phase TN system. Varistor + GDT protection L1, L2, L3-PE and N-PE

NEW **7P.02.8.275.1012**



- SPD Type 1+2
- Combination of varistor and encapsulated spark gap (for single phase systems)
- Visual fault and remote contact fault signalling varistor/GDT status, N-PE GDT presence
- Replaceable modules

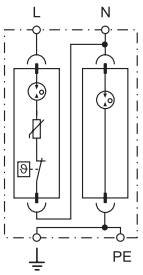

NEW **7P.04.8.275.1012**



- SPD Type 1+2
- 3 x combined varistor and encapsulated spark gap + 1 encapsulated spark gap
- Visual fault and remote contact fault signalling varistor/GDT status
- Replaceable modules

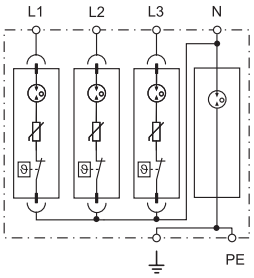

NEW **7P.05.8.275.1012**



- SPD Type 1+2
- 4 x combined varistor and encapsulated spark gap
- Visual fault and remote contact fault signalling varistor/GDT status
- Replaceable modules

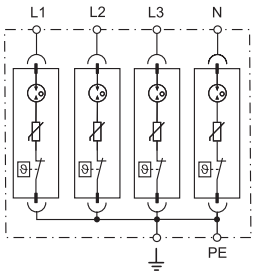

For outline drawing see page 21

SPD specification		**L-N**	**N-PE**	**L-N**	**N-PE**	**L-PE, N-PE**	
Nominal voltage (U_N)	V AC	230	—	230	—	230	
Maximum operating voltage (U_C)	V AC	275	255	275	255	275	
Lightning impulse current (10/350 µs) (I_{imp})	kA	12.5	25	12.5	50	12.5	
Nominal discharge current (8/20 µs) (I_n)	kA	30	30	30	50	30	
Maximum discharge current (8/20 µs) (I_{max})	kA	60	60	60	100	60	
Total discharge current (10/350 µs) (I_{total})	kA	50		50	50	50	
Voltage protection level (U_P)	kV	1.5	1.5	1.5	1.5	1.5	
Ability to independently switch off the following current (I_{fi})	A	No following current	100	No following current	100	No following current	
I_{PE}	uA	< 2	< 2	< 2	< 2	< 2	
TOV 120 min L-N (whitstand)	V AC	440	—	440	—	440	
TOV 5 s L-N (whitstand)	V AC	335	—	335	—	335	
Response time (t_a)	ns	100	100	100	100	100	
Short-circuit proof at maximum overcurrent protection - I_{SSCR}	kA_{rms}	50	—	50	—	50	
Maximum overcurrent protection (fuse rating gL/gG)	A	160	—	160	—	160	
Replacement module code		7P.00.8.275.0012	7P.00.1.255.0025	7P.00.8.275.0012	—	7P.00.8.275.0012	
Other technical data							
Ambient temperature range	°C	–40…+80					
Protection degree alone / installed		IP 20					
Wire size		solid cable			stranded cable		
	mm^2	1 x 1…1 x 35			1 x 1…1 x 25		
	AWG	1 x 17…1 x 2			1 x 17…1 x 4		
Wire strip length	mm	12					
Screw torque	Nm	3					
Remote status signalling contact specification							
Contact configuration		1 CO (SPDT)		1 CO (SPDT)		1 CO (SPDT)	
Rated current	A AC/DC	0.5/0.1		0.5/0.1		0.5/0.1	
Rated voltage	V AC/DC	250/30		250/30		250/30	
Wire size (07P.01)		solid cable	stranded cable	solid cable	stranded cable	solid cable	stranded cable
	mm^2	1.5	1.5	1.5	1.5	1.5	1.5
	AWG	16	16	16	16	16	16
Approvals (according to type)		CE UK CA EAC					

SPD Type 1+2 Surge arrester range with high performance "Low U_p" - Single phase/three phase system

- Surge arrester suitable for 230/400 V system applications to prevent overvoltage effects caused by direct or indirect lightning strikes
- To be installed at the boundary of LPZ 0 and LPZ 1 zones
- Very Low U_p level to protect senstive equipment
- Visual indication of varistor status - Healthy/Replace
- Contact for remote signalling of varistor status. Connector 07P.01 included
- Replaceable spark gap and modules
- Complies with EN 61 643-11
- 17.5 mm rail EN 60715 mounting for each module

7P.12.8.275.1012 SPD Type 1+2 for single phase TT and TN-S system with Neutral.

- Varistor protection L-N + spark gap protection N-PE for single phase systems
- Replaceble spark gap and varistor modules

7P.13.8.275.1012 SPD Type 1+2 for three phase TN-C system without Neutral (PEN conductor).

- Varistor protection L1, L2, L3-PEN for three phase systems
- Replaceable varistor modules

7P.12 / 7P.13
Screw terminals



For outline drawing see page 22

7P.12.8.275.1012



- SPD Type 1+2
- Replaceble spark gap and varistor modules (for single phase systems)
- Visual and remote signalling of varistor status

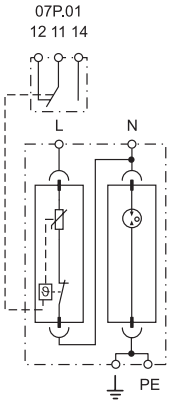

7P.13.8.275.1012



- SPD Type 1+2
- Replaceable varistor modules (for three phase systems)
- Visual and remote signalling of varistor status

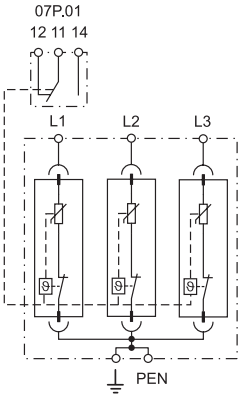

SPD specification		L-N		N-PE	L-PEN	
Nominal voltage (U_N)	V AC	230		—	230	
Maximum continous operating voltage (U_C)	V AC/DC	275/—		255/—	275/350	
Lightning impulse current (10/350 µs) (I_{imp})	kA	12.5		25	12.5	
Nominal discharge current (8/20 µs) (I_n)	kA	30		40	30	
Maximum discharge current (8/20 µs) (I_{max})	kA	60		60	60	
Total discharge current (10/350 µs) (I_{total})	kA	25		25	37.5	
Voltage protection level (U_p)	kV	1.5		1.5	1.5	
Ability to independently switch off the following current (I_{fi})	A	No following current		100	No following current	
I_{PE}	uA	< 1			< 2100	
TOV 120 min L-N	V AC	440		—	440	
TOV 5 s L-N (Withstand)	V AC	335		—	335	
TOV 200 ms N-PE (Withstand)	V AC	—		1200	—	
Response time (t_a)	ns	25		100	25	
Short-circuit proof at maximum overcurrent protection - I_{SSCR}	kA_{rms}	50		—	50	
Maximum overcurrent protection (fuse rating gL/gG)	A	160		—	160	
Replacement module code		7P.10.8.275.0012		7P.10.1.000.0025	7P.10.8.275.0012	
Other technical data						
Ambient temperature range	°C	–40…+80				
Protection degree		IP 20				
Wire size		solid cable			stranded cable	
	mm^2	1 x 1…1 x 35			1 x 1…1 x 25	
	AWG	1 x 17…1 x 2			1 x 17…1 x 4	
Wire strip length	mm	12				
Screw torque	Nm	3				
Remote status signalling contact specification						
Contact configuration		1 CO (SPDT)		—	1 CO (SPDT)	
Rated current	A AC/DC	0.5/0.1		—	0.5/0.1	
Rated voltage	V AC/DC	250/30		—	250/30	
Wire size (07P.01)		solid cable	stranded cable		solid cable	stranded cable
	mm^2	1.5	1.5	—	1.5	1.5
	AWG	16	16	—	16	16
Approvals (according to type)		CE UK CA EAC				

X-2021, www.findernet.com

SPD Type 1+2 Surge arrester range with high performance "Low U_p" - three phase system

- Surge arrester suitable for 230/400 V system applications to prevent overvoltage effects caused by direct or indirect lightning strikes
- To be installed at the boundary of LPZ 0 and LPZ 1 zones
- Very Low U_p level to protect senstive equipment
- Visual indication of varistor status - Healthy/Replace
- Contact for remote signalling of varistor status. Connector 07P.01 included
- Replaceable varistor modules
- Complies with EN 61 643-11
- 17.5 mm rail EN 60715 mounting for each module

7P.14.8.275.1012 SPD Type 1+2 for three phase TT and TN-S system with Neutral.

- Varistor protection L1, L2, L3-N + spark gap protection N-PE
- Replaceable varistor modules
- Non replaceable high discharge current spark gap

7P.15.8.275.1012 SPD Type 1+2 for three phase TN-S system with Neutral.

- Varistor protection L1, L2, L3,N-PE
- Replaceable varistor modules

7P.14 / 7P.15
Screw terminals



For outline drawing see page 22

7P.14.8.275.1012



- SPD Type 1+2
- Replaceable varistor module
- Visual and remote signalling of varistor status

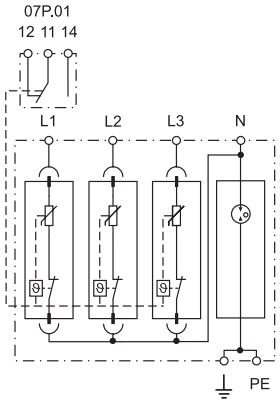

7P.15.8.275.1012



- SPD Type 1+2
- Replaceable varistor module
- Visual and remote signalling of varistor status

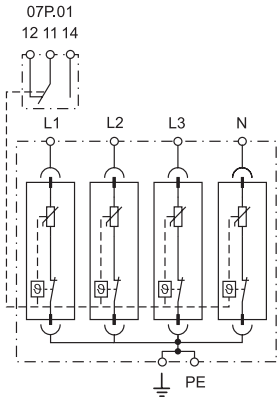

SPD specification		**L-N**	**N-PE**	**L, N-PE**
Nominal voltage (U_N)	V AC	230	—	230
Maximum continous operating voltage (U_C)	V AC/DC	275/—	255/—	275/350
Lightning impulse current (10/350 µs) (I_{imp})	kA	12.5	50	12.5
Nominal discharge current (8/20 µs) (I_n)	kA	30	50	30
Maximum discharge current (8/20 µs) (I_{max})	kA	60	100	60
Total discharge current (10/350 µs) (I_{total})	kA	50	50	50
Voltage protection level (U_p)	kV	1.5	1.5	1.5
Ability to independently switch off the following current (I_{fi})	A	No following current	100	No following current
I_{PE}	uA	< 2		< 2800
TOV 120 min L-N	V AC	440	—	440
TOV 5 s L-N (Withstand)	V AC	335	—	335
TOV 200 ms N-PE (Withstand)	V AC	—	1200	—
Response time (t_a)	ns	25	100	25
Short-circuit proof at maximum overcurrent protection - I_{SSCR}	kA_{rms}	50	—	50
Maximum overcurrent protection (fuse rating gL/gG)	A	160	—	160
Replacement module code		7P.10.8.275.0012	—	7P.10.8.275.0012
Other technical data				
Ambient temperature range	°C	–40…+80		
Protection degree		IP 20		
Wire size		solid cable		stranded cable
	mm^2	1 x 1…1 x 35		1 x 1…1 x 25
	AWG	1 x 17…1 x 2		1 x 17…1 x 4
Wire strip length	mm	12		
Screw torque	Nm	3		
Remote status signalling contact specification				
Contact configuration		1 CO (SPDT)	—	1 CO (SPDT)
Rated current	A AC/DC	0.5/0.1	—	0.5/0.1
Rated voltage	V AC/DC	250/30	—	250/30
Wire size (07P.01)		solid cable / stranded cable		solid cable / stranded cable
	mm^2	1.5 / 1.5	—	1.5 / 1.5
	AWG	16 / 16	—	16 / 16
Approvals (according to type)		CE UK CA EAC		

SPD Type 2 Surge arrester range for single/ three phase AC systems and for DC systems

- Surge arrester suitable for AC and DC systems to protect equipment against induced overvoltage or switching transients
- To be installed at the boundary of LPZ 1 - LPZ 2 zones or higher
- Visual indication of varistor status - Healthy/Replace
- Contact for remote signalling of varistor status. Connector (07P.01) included (depending on the version)
- Replaceable varistor and spark gap modules
- Complies with EN 61643-11:2012
- 17.5 mm rail EN 60715 mounting for each module

7P.21.8.075.1015 SPD Type 2, unipolar protection suitable for DC applications or low voltage AC single phase systems
- Varistor protection +/– or L/N (GND); –/+ or GND (L/N)
- Replaceable module

7P.21.8.130.1015 SPD Type 2, unipolar protection suitable for DC application or low voltage AC single phase systems
- Varistor protection +/– or L/N (GND); –/+ or GND (L/N)
- Replaceable module

7P.21.8.275.x020 SPD Type 2, unipolar protection suitable to realize single phase or three phase systems (230/400 V)
- Varistor protection L/N(GND)-GND/(L/N)
- Replaceable module

7P.21.8.440.x020 SPD Type 2, unipolar protection suitable for three phase systems (400 V AC)
- Varistor protection L/N(GND)-GND/(L/N)
- Replaceable module

7P.22.8.275.x020 SPD Type 2 for single phase TT and TN-S system with Neutral
- Varistor protection L-N + spark gap protection N-PE
- Replaceable varistor and spark gap modules

7P.27.8.275.x020 SPD Type 2 for single phase TN system with Neutral
- Varistor protection L, N-PEx
- Replaceable varistor modules

For outline drawing see page 22

E

7P.21.8.xxx.x0xx



- SPD Type 2 (1 varistor)
- Replaceable varistor module
- Visual and optional remote connector for signalling of the varistor status

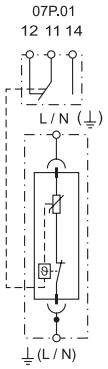

* 7P.20.8.075.0015
** 7P.20.8.130.0015
*** 7P.20.8.275.0020
**** 7P.20.8.440.0020

7P.22.8.275.x020



- SPD Type 2 (1 varistor + 1 spark-gap)
- Combination of replaceable varistor and encapsulated spark gap modules
- Visual and optional remote connector for signalling of the varistor status

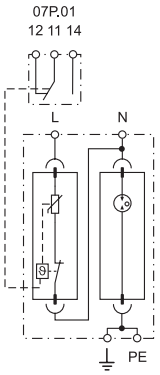

7P.27.8.275.x020



- SPD Type 2 (2 varistors)
- Replaceable varistor modules
- Visual and optional remote connector for signalling of the varistor status

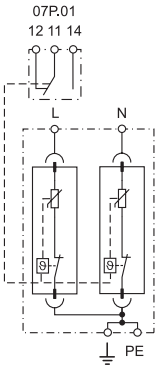

SPD specification		075.1015	130.1015	275.1020	440.1020	L-N	N-PE	L, N-PE
Nominal voltage (U_N)	V AC/DC	60/60	110/125	230/—	400/—	230/—	—	230/—
Maximum continous operating voltage (U_C)	V AC/DC	75/100	130/170	275/350	440/585	275/—	255/—	275/—
Nominal discharge current (8/20 µs) (I_n)	kA	15	15	20	20	20	20	20
Maximum discharge current (8/20 µs) (I_{max})	kA	40	40	40	40	40	40	40
Voltage protection level at 5 kA (U_{P5})	kV	0.3	0.45	0.9	1.5	0.9	—	0.9
Voltage protection level at I_n(U_p)	kV	0.4	0.7	1.35	1.9	1.35	1.5	1.35
I_{PE}	uA	< 350	< 350	< 200	< 350	< 4		< 400
TOV 120 min L-N	V AC	115	225	440	—	440	—	440
TOV 5 s L-N	V AC	90	175	335	580	335	—	335
TOV 200 ms N-PE	V AC	—	—	—	—	—	1200	—
Response time (t_a)	ns	25				25	100	25
Short-circuit proof at maximum overcurrent protection - I_{SSCR}	kA_{rms}	50			25	50	—	50
Maximum overcurrent protection (fuse rating gL/gG)	A	160			125	160	—	160
Replacement module code		*	**	***	****	7P.20.8.275.0020	7P.20.1.000.0020	7P.20.8.275.0020
Other technical data								
Ambient temperature range	°C	–40…+80						
Protection degree		IP 20						
Wire size		solid cable				stranded cable		
	mm^2	1 x 1…1 x 35				1 x 1…1 x 25		
	AWG	1 x 17…1 x 2				1 x 17…1 x 4		
Wire strip length	mm	12						
Screw torque	Nm	3						
Remote status signalling contact specification								
Contact configuration		1 CO (SPDT)				1 CO (SPDT)		
Rated current	A AC/DC	0.5/0.1				0.5/0.1		
Rated voltage	V AC/DC	250/30				250/30		
Wire size (07P.01)		solid cable		stranded cable		solid cable		stranded cable
	mm^2	1.5		1.5		1.5		1.5
	AWG	16		16		16		16
Approvals (according to type)								

X-2021, www.findernet.com

SPD Type 2 Surge arrester range - three phase systems

- Surge arrester suitable for 230/400 V system applications to protect equipments against induced overvoltage or switching transients
- To be installed at the boundary of LPZ 1 - LPZ 2 zones or higher
- Visual indication of varistor status - Healthy/Replace
- Contact for remote signalling of varistor status. Connector (07P.01) included (depending on the version)
- Replaceable varistor and spark gap modules
- Complies with EN 61643-11:2012
- 35 mm rail (EN 60715) mounting

7P.23.8.275.x020 SPD Type 2 for three phase TN-C system without Neutral (PEN conductor).
- Varistor protection L1, L2, L3-PEN
- Replaceable varistor module

7P.24.8.275.x020 SPD Type 2 for three phase TT and TN-S system with Neutral.
- Varistor protection L1, L2, L3 + spark gap protection N-PE
- Replaceable varistor and spark gap modules

7P.25.8.275.x020 SPD Type 2 for three phase TN-S system with Neutral.
- Varistor protection L1, L2, L3, N-PE
- Replaceable varistor module

7P.23.8 / 7P.24 / 7P.25
Screw terminals



For outline drawing see page 23

	7P.23.8.275.x020	7P.24.8.275.x020	7P.25.8.275.x020
			
	• SPD Type 2 (3 varistors) • Replaceable varistor module, 3 pole • Visual and remote signalling of varistor status	• SPD Type 2 (3 varistors + 1 spark-gap) • Combination of replaceable varistor and encapsulated spark gap modules • Visual and optional remote connector for signalling of the varistor status	• SPD Type 2 (4 varistors) • Replaceable varistor module, 4 pole • Visual and optional remote connector for signalling of the varistor status
	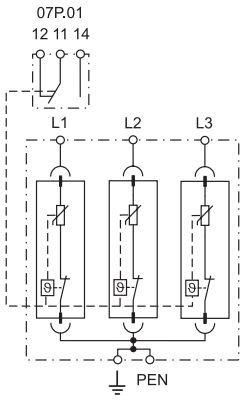	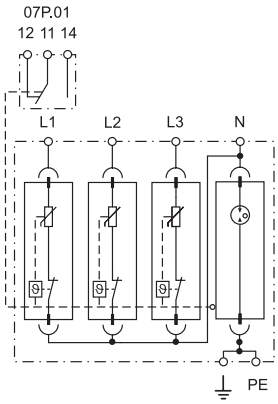	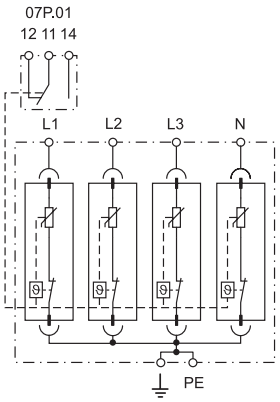

SPD specification		**L - PEN**	**L-N**	**N-PE**	**L, N-PE**
Nominal voltage (U_N)	V AC	230	230	—	230
Maximum continous operating voltage (U_C)	V AC/DC	275/350	275/—	255/—	275/350
Nominal discharge current (8/20 µs) (I_n)	kA	20	20	20	20
Maximum discharge current (8/20 µs) (I_{max})	kA	40	40	40	40
Voltage protection level at 5 kA (U_{P5})	kV	0.9	0.9	—	0.9
Voltage protection level at I_n(U_p)	kV	1.35	1.35	1.5	1.35
I_{PE}	uA	< 600	< 4		< 800
TOV 120 min L-N	V AC	440	440	—	440
TOV 5 s L-N	V AC	335	335	—	—
TOV 200 ms N-PE	V AC	—	—	1200	—
Response time (t_a)	ns	25	25	100	25
Short-circuit proof at maximum overcurrent protection - I_{SSCR}	kA_{rms}	50	50	—	50
Maximum overcurrent protection (fuse rating gL/gG)	A	160	160	—	160
Replacement module code		7P.20.8.275.0020	7P.20.8.275.0020	7P.20.1.000.0020	7P.20.8.275.0020
Other technical data					
Ambient temperature range	°C	–40…+80			
Protection degree		IP 20			
Wire size		solid cable		stranded cable	
	mm^2	1 x 1…1 x 35		1 x 1…1 x 25	
	AWG	1 x 17…1 x 2		1 x 17…1 x 4	
Wire strip length	mm	12			
Screw torque	Nm	3			
Remote status signalling contact specification					
Contact configuration		1 CO (SPDT)	1 CO (SPDT)		1 CO (SPDT)
Rated current	A AC/DC	0.5/0.1	0.5/0.1		0.5/0.1
Rated voltage	V AC/DC	250/30	250/30		250/30
Wire size (07P.01)		solid cable / stranded cable	solid cable / stranded cable		solid cable / stranded cable
	mm^2	1.5 / 1.5	1.5 / 1.5		1.5 / 1.5
	AWG	16 / 16	16 / 16		16 / 16
Approvals (according to type)					

SPD Type 2 Surge arrester range for single/ three phase AC systems without leakage current

- Surge arrester suitable for AC systems to protect equipment against induced overvoltage or switching transients
- To be installed at the boundary of LPZ 1 - LPZ 2 zones or higher
- Versions with combination of varistor and high-performance spark gap (GDT) ensures:
  - high discarge current
  - high insulation resistance that eliminates leakage current
  - no following current
- Very low residual voltage
- Visual fault signalling: Healthy/Replace
- Remote status signalling contact: Healthy/Replace
- Connector 07P.01 included
- Replaceable modules
- Complies with EN 61643-11:2012
- 17.5 mm rail EN 60715 mounting for each module

7P.42.8.275.1020 SPD Type 2 for single phase TT and TN-S system. Varistor + GDT protection L-N + GDT protection N-PE

7P.43.8.275.1020 SPD Type for three phase TN-C system without Neutral (PEN conductor). Varistor + GDT protection L1, L2, L3-PEN

7P.42/7P.43
Screw terminals



For outline drawing see page 22, 23

NEW **7P.42.8.275.1020**



- SPD Type 2
- Combination of varistor and encapsulated spark gap (for single phase systems)
- Replaceable modules
- Visual fault and remote contact fault signalling varistor/GDT status

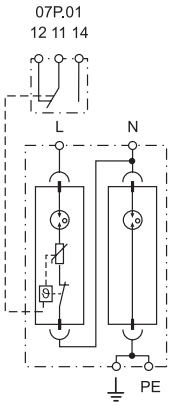

NEW **7P.43.8.275.1020**



- SPD Type 2
- 3 x combined varistor and encapsulated spark gap
- Replaceable modules
- Visual fault and remote contact fault signalling varistor/GDT status

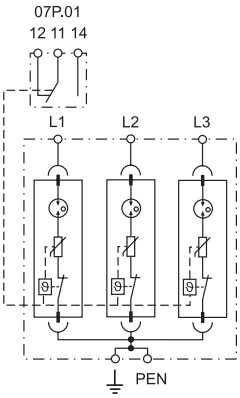

SPD specification		L-N		N-PE	L-PEN	
Nominal voltage (U_N)	V AC	230		—	230	
Maximum continous operating voltage (U_C)	V AC	275		255	275	
Nominal discharge current (8/20 µs) (I_n)	kA	20		20	20	
Maximum discharge current (8/20 µs) (I_{max})	kA	25		40	25	
Voltage protection level (U_p)	kV	1.2		1.5	1.2	
Ability to independently switch off the following current (I_{fi})	A	No following current		100	No following current	
I_{PE}	uA	< 4			< 4	
TOV 120 min L-N	V AC	440		—	440	
TOV 5 s L-N	V AC	335		—	335	
TOV 200 ms N-PE	V AC	—		1200	—	
Response time (t_a)	ns	100		100	100	
Short-circuit proof at maximum overcurrent protection - I_{SSCR}	kA_{rms}	35		—	35	
Maximum overcurrent protection (fuse rating gL/gG)	A	125		—	125	
Replacement module code		7P.40.8.275.0020		7P.40.1.000.0020	7P.40.8.275.0020	
Other technical data						
Ambient temperature range	°C	–40…+80				
Protection degree		IP 20				
Wire size		solid cable			stranded cable	
	mm^2	1 x 1…1 x 35			1 x 1…1 x 25	
	AWG	1 x 17…1 x 2			1 x 17…1 x 4	
Wire strip length	mm	12				
Screw torque	Nm	3				
Remote status signalling contact specification						
Contact configuration		1 CO (SPDT)		—	1 CO (SPDT)	
Rated current	A AC/DC	0.5/0.1		—	0.5/0.1	
Rated voltage	V AC/DC	250/30		—	250/30	
Wire size (07P.01)		solid cable	stranded cable		solid cable	stranded cable
	mm^2	1.5	1.5	—	1.5	1.5
	AWG	16	16	—	16	16
Approvals (according to type)		CE UKCA EAC				

X-2021, www.findernet.com

SPD Type 2 Surge arrester range for three phase AC systems (230/400 V) without leakage current

- Surge arrester suitable for AC systems to protect equipment against induced overvoltage or switching transients
- To be installed at the boundary of LPZ 1 - LPZ 2 zones or higher
- Versions with combination of varistor and high-performance spark gap (GDT) ensures:
  - high discarge current
  - high insulation resistance that eliminates leakage current
  - no following current
- Very low residual voltage
- Visual fault signalling: Healthy/Replace
- Remote status signalling contact: Healthy/ Replace. Connector 07P.01 included
- Replaceable modules
- Complies with EN 61643-11:2012
- 17.5 mm rail EN 60715 mounting for each module

7P.44.8.275.1020 SPD Type 2 for three phase TT and TN-S system with Neutral. Varistor + GDT protection L1, L2, L3-N + spark gap protection N-PE

7P.45.8.275.1020 SPD Type 2 for three phase TN-S system with Neutral. Varistor + GDT protection L1, L2, L3-N + varistor + GDT protection N-PE

7P.44/7P.45
Screw terminals



For outline drawing see page 23

NEW **7P.44.8.275.1020**



- SPD Type 2
- 3 x combined varistor and encapsulated spark gap + 1 encapsulated spark gap
- Visual fault and remote contact fault signalling varistor/GDT status
- Replaceable modules

NEW **7P.45.8.275.1020**



- SPD Type 2
- 4 x combined varistor and encapsulated spark gap
- Visual fault and remote contact fault signalling varistor/GDT status
- Replaceable modules

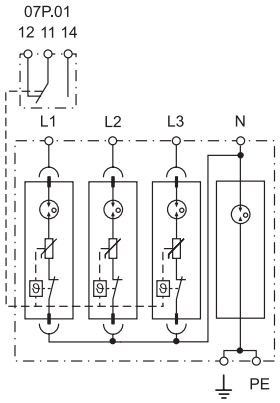

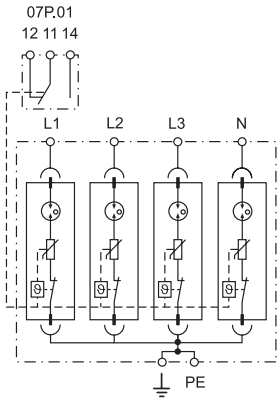

SPD specification		L-N	N-PE	L, N-PE
Nominal voltage (U_N)	V AC	230	—	230
Maximum continous operating voltage (U_C)	V AC	275	255	275
Nominal discharge current (8/20 µs) (I_n)	kA	20	20	20
Maximum discharge current (8/20 µs) (I_{max})	kA	25	40	25
Voltage protection level (U_p)	kV	1.2	1.5	1.2
Ability to independently switch off the following current (I_{fi})	A	No following current	100	No following current
I_{PE}	µA	< 4		< 4
TOV 120 min L-N	V AC	440	—	440
TOV 5 s L-N	V AC	335	—	335
TOV 200 ms N-PE	V AC	—	1200	—
Response time (t_a)	ns	100	100	100
Short-circuit proof at maximum overcurrent protection - I_{SSCR}	kA_{rms}	35	—	35
Maximum overcurrent protection (fuse rating gL/gG)	A	125 A	—	125 A
Replacement module code		7P.40.8.275.0020	7P.40.1.000.0020	7P.40.8.275.0020
Altri dati tecnici				
Ambient temperature range	°C	–40…+80		
Protection degree		IP 20		
Wire size		solid cable		stranded cable
	mm^2	1 x 1…1 x 35		1 x 1…1 x 25
	AWG	1 x 17…1 x 2		1 x 17…1 x 4
Wire strip length	mm	12		
Screw torque	Nm	3		
Remote status signalling contact specification				
Contact configuration		1 CO (SPDT)	—	1 CO (SPDT)
Rated current	A AC/DC	0.5/0.1	—	0.5/0.1
Rated voltage	V AC/DC	250/30	—	250/30
Wire size (07P.01)		solid cable / stranded cable		solid cable / stranded cable
	mm^2	1.5 / 1.5	—	1.15 / 1.5
	AWG	16 / 16	—	16 / 16
Approvals (according to type)		CE UK CA EAC		

SPD Type 2 Surge arrester range for Photovoltaic applications

- Surge arrester for protection of DC side (750 V to 1200 V) of systems in photovoltaic applications
- Protects equipment against induced overvoltage caused by lightning strikes or switching transients

7P.23.9.750.x020, U_{CPV} = 750 V DC
7P.23.9.500.1015, U_{CPV} = 1500 V DC

- Visual indication of varistor status - Healthy/Replace
- Contact for remote signalling of varistor status. Connector (07P.01) included (depending on the verision)
- Replaceable modules
- Complies with prEN 50539-11:2012
- 35 mm rail (EN 60715) mounting

7P.23.9.750.x020



- SPD Type 2 (3 varistors) for 750 V DC photovoltaic systems
- Replaceable varistor modules
- Visual and optional remote connector for signalling of the varistor status

7P.23.9.500.1015



- SPD Type 2 (3 varistors) for 1500 V DC photovoltaic systems
- Replaceable varistor modules
- Visual and remote signalling of varistor status

7P.23.9
Screw terminals



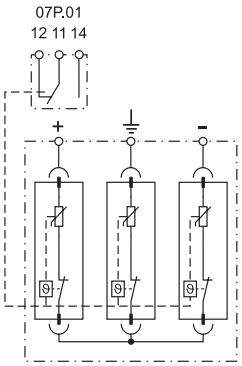

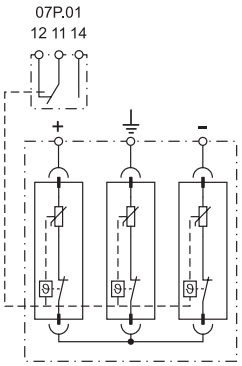

For outline drawing see page 23

SPD specification		Varistor module		Varistor module	
Maximum operating voltage (U_{CPV})	V DC	750		1500	
Maximum operating voltage/per module (U_{CPV})	V DC	375		750	
Nominal discharge current/ per module (8/20 µs) (I_n)	kA	20		15	
Maximum discharge current/ per module (8/20 µs) (I_{max})	kA	40		40	
Voltage protection level/per module (U_p)	kV	1.8		3.2	
Voltage protection level of the system U_p (+ → –)/(+/– → PE)	kV	3.6/3.6		6.4/6.4	
Residual current (+ → –)/(+/– → PE)	uA	<5		< 5	
Response time (t_a)	ns	25		25	
Short circuit current withstand I_{SCPV}	A	1000		1000	
Replacement module code		7P.20.9.375.0020		7P.20.9.750.0015	
Other technical data					
Ambient temperature range	°C	–40…+80			
Protection degree		IP 20			
Wire size		solid cable		stranded cable	
	mm²	1 x 1…1 x 35		1 x 1…1 x 25	
	AWG	1 x 17…1 x 2		1 x 17…1 x 4	
Wire strip length	mm	14			
Screw torque	Nm	3			
Remote status signalling contact specification					
Contact configuration		1 CO (SPDT)		1 CO (SPDT)	
Rated current	A AC/DC	0.5/0.1		0.5/0.1	
Rated voltage	V AC/DC	250/30		250/30	
Wire size (07P.01)		solid cable	stranded cable	solid cable	stranded cable
	mm²	1.5	1.5	1.5	1.5
	AWG	16	16	16	16
Approvals (according to type)		CE UK CA EAC			

X-2021, www.findernet.com

SPD Type 1+2 and Type 2 Surge arrester range for Photovoltaic applications

- Surge arrester for protection of DC side (1020 V) of systems in photovoltaic applications
- Protects equipment against overvoltage caused by direct lightning strike (Type 1+2 only) and induced overvoltages (Type 1+2 and Type 2)

7P.26.9.000.x015, U_{CPV} = 1020 V DC (Type 2)
7P.23.9.000.x015, U_{CPV} = 1020 V DC (Type 2)
7P.03.9.000.1012, U_{CPV} = 1000 V DC (Type 1+2)

- Visual indication of varistor status - Healthy/Replace
- Contact for remote signalling of varistor status. Connector (07P.01) included (depending on the verision)
- Replaceable modules
- Complies with prEN 50539-11:2012
- 35 mm rail (EN 60715) mounting

7P.23.9 / 7P.26 / 7P.03
Screw terminals



For outline drawing see page 23

	7P.26.9.000.x015	7P.23.9.000.x015	7P.03.9.000.1012
			
	• SPD Type 2 (2 varistors + 1 spark-gap) for 1020 V DC photovoltaic systems • Combination of replaceable varistor and encapsulated spark gap modules • Visual and optional remote connector for signalling of the varistor status	• SPD Type 2 (3 varistors) for 1020 V DC photovoltaic systems • Replaceable varistor modules • Visual and optional remote connector for signalling of the varistor status	• SPD Type 1+2 (3 varistors) for 1000 V DC photovoltaic systems • Replaceable varistor modules • Visual and remote signalling of varistor status
	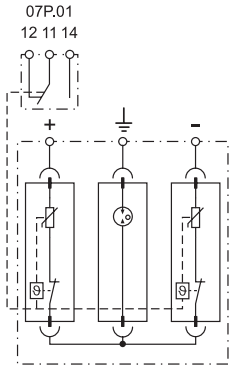	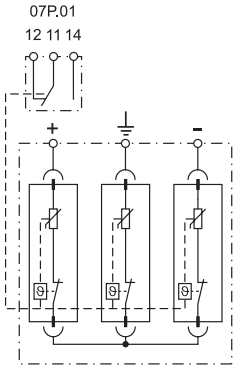	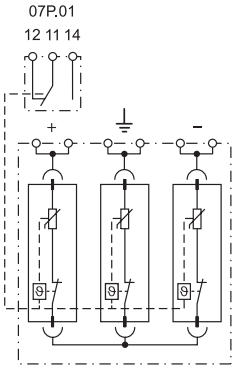

SPD specification		**Varistor module**	**Spark-gap module**	**Varistor module**		**Varistor module**	
Maximum operating voltage (U_{CPV})	V DC	1020		1020		1000	
Maximum operating voltage/per module (U_{CPV})	V DC	510	1020	510		500	
Lightning impulse current (10/350 µs)/ per module (I_{mp})	kA	—	—	—		12.5	
Nominal discharge current/ per module (8/20 µs) (I_n)	kA	15	15	15		30	
Maximum discharge current/ per module (8/20 µs) (I_{max})	kA	30	30	40		60	
Voltage protection level/per module (U_p)	kV	2	2.5	2		1.8	
Voltage protection level of the system U_p (+ → –)/(+/– → PE)	kV	4/2.5		4/4		3.6/3.6	
Residual current (+ → –)/(+/– → PE)	uA	< 1		< 5		< 5	
Response time (t_a)	ns	25	100	25		25	
Short circuit current withstand I_{SCPV}	A	1000	—	1000		1000	
Replacement module code		7P.20.9.500.0015	7P.20.1.000.9015	7P.20.9.500.0015		7P.00.9.500.0012	
Other technical data							
Ambient temperature range	°C	–40…+80					
Protection degree		IP 20					
Wire size		solid cable		stranded cable		solid cable	stranded cable
	mm²	1 x 1…1 x 35		1 x 1…1 x 25		1 x 2.5…1 x 50	1 x 2.5…1 x 35
	AWG	1 x 17…1 x 2		1 x 17…1 x 4		1 x 13…1 x 1	1 x 13…1 x 2
Wire strip length	mm	14				9	
Screw torque	Nm	3				4	
Remote status signalling contact specification							
Contact configuration		1 CO (SPDT)		1 CO (SPDT)		1 CO (SPDT)	
Rated current	A AC/DC	0.5/0.1		0.5/0.1		0.5/0.1	
Rated voltage	V AC/DC	250/30		250/30		250/30	
Wire size (07P.01)		solid cable	stranded cable	solid cable	stranded cable	solid cable	stranded cable
	mm²	1.5	1.5	1.5	1.5	1.5	1.5
	AWG	16	16	16	16	16	16
Approvals (according to type)		CE UK CA EAC					

7P SERIES
Surge Protection Devices (SPD)

SPD Type 3, Surge arrester for TT and TN-S system (with Neutral)
Single phase applications within socket outlets and 35 mm rail mounting

- Protects electrical and electronic equipment sensitive to impulse overvoltage
- Varistor and spark gap (GDT) combination avoiding earth leakage current
- Conforms to EN 61643-11:2012

7P.31.8.275.0005
- Unipolar protection (L/N)
- IP 65 SPD
- LED indication of need to replace the SPD
- 2 wires, 150 mm long, for ease of connection

7P.32.8.275.0005
- "1+1" configuration: varistor + spark gap with very low U_p level
- IP 65 SPD
- LED indication of need to replace the SPD
- 3 wires, 150 mm long, for ease of connection

	7P.31.8.275.0005	7P.32.8.275.0005
		
	• SPD Type 3 • Unipolar protection suitable also for LED lamp protection • IP 65	• SPD Type 3 • "1+1" configuration suitable also for LED lamp protection • IP 65
	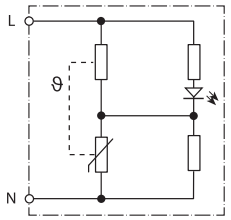	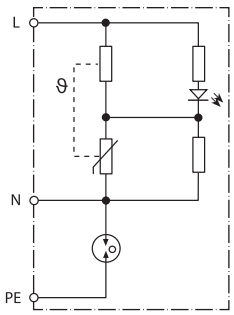

* see diagram L7P page 29
For outline drawing see page 24

SPD specification			
Nominal voltage (U_N)	V AC	230	230
Maximum continuous operating voltage (U_C)	V AC	275	275
Nominal discharge current (8/20 µs) L-N, L(N)-PE (I_n)	kA	5/—	5/5
Maximum discharge current (8/20 us) L-N, N-PE (I_{max})	kA	10/—	10/10
Test voltage of the combined generator L-N, L(N)-PE (U_{OC})	kV	10/—	10/10
Voltage protection level L-N, L(N)-PE (U_p)	kV	1.6/—	1.65/1.5
Response time L-N, L(N)-PE (t_a)	ns	25/—	25/100
Short-circuit proof at maximum overcurrent protection - I_{SSCR}	kA_{rms}	1.5	1.5
Maximum overcurrent protection		16 A gL/gG, B16 A, C10 A	16 A gL/gG, B16 A, C10 A
Other technical data			
Ambient temperature range	°C	–25…+80	–25…+80
Protection degree		IP 65	IP 65
Approvals (according to type)		CE UKCA EAC	CE UKCA

X-2021, www.findernet.com

SPD Type 3, Surge arrester for TT and TN-S system (with Neutral)
Single phase applications within socket outlets and 35 mm rail mounting

- Protects electrical and electronic equipment sensitive to impulse overvoltage
- Varistor and spark gap (GDT) combination avoiding earth leakage current
- Conforms to EN 61643-11:2012

7P.36.8.275.2003

- Provides easy additional surge protection for 230 V sockets
- "Y" configuration: varistor + spark gap with very low U_p level
- Audible indication of need to replace varistor and jumper test point for SPD status
- 3-wires, 150 mm long, for connection to socket terminals

7P.37.8.275.1003

- "1+1" configuration: varistor + spark gap with very low U_p level
- Permits serial connection for optimized load protection up to 16 A
- Integral CO contact for remote signalling of varistor status - contact gold plated for reliable low level switching
- 17.5 mm L-N/N-PE protection
- Mounting on 35 mm DIN rail (EN 60715)

		7P.36.8.275.2003	**7P.37.8.275.1003**	
				
		• SPD Type 3 • "Y" configuration • Audible (buzzing) signalling of varistor fault	• SPD Type 3 • "1+1" configuration • Series connection for protection of loads up to 16 A • Remote signalling of varistor status by integral change-over relay contact	
		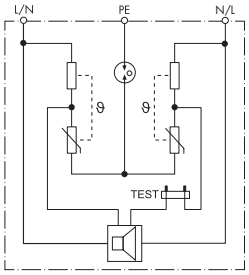	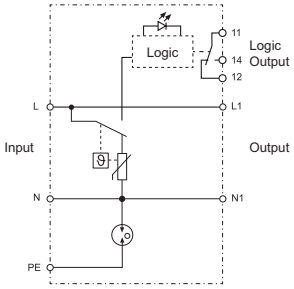	
* see diagram L7P page 29 For outline drawing see page 23, 24				
SPD specification				
Nominal voltage (U_N)	V AC	230	230	
Maximum continuous operating voltage L-N/N-PE (U_C)	V AC	275	275/255	
Rated load current (I_L)	A	—	16	
Nominal discharge current (8/20 µs) L-N, L(N)-PE (I_n)	kA	3/3	3/3	
Test voltage of the combined generator L-N, L(N)-PE (U_{OC})	kV	6/6	6/6	
Voltage protection level L-N, L(N)-PE (U_p)	kV	1.65/1.5	1/1.5	
Response time L-N, L(N)-PE (t_a)	ns	25/100	25/100	
Short-circuit proof at maximum overcurrent protection - I_{SSCR}	kA_{rms}	1.5	5	
Maximum overcurrent protection		16 A gL/gG, B16 A, C10 A	C16 A, 16 A gG	
Other technical data				
Ambient temperature range	°C	–20…+70	–20…+70*	
Protection degree		IP 20	IP 20	
Wire size		—	solid cable	stranded cable
	mm^2	—	0.5…4	0.5…4
	AWG	—	20…11	20…12
Wire strip length	mm	—	9	
Screw torque	Nm	—	0.8	
Remote status signalling contact specification				
Contact configuration		—	1 CO (SPDT)	
Rated current	A AC	—	0.5	
Rated voltage	V AC	—	230	
Breaking capacity DC1: 30/110	A	—	2/0.3	
Minimum switching load	mW (V/mA)	—	10 (5/5)	
Contact material		—	AgNi + Au	
Approvals (according to type)		CE UK CA EAC	CE UK CA EAC	

E

SPD Type 2+3 with combination of coarse and fine suppression for 2 wires data lines and signalling network

- Suitable for the protection of 2 wires data lines and telecommunication interface allowing continuity of the shield
- Permits serial connection optimizing the fine protection of longitudinal overvoltage (core-PG) and lateral overvoltage (core-core)
- Conform to EN 61643-21+A1,A2:2013, EN IEC61643-21+A1,A2:2012 C2,C3
- DIN rail mounting

7P.62.9.009.0485

- Suitable for the protection of RS485 data lines of inverter, PLC, energy meters or other interfaces

7P.62.9.036.0005

- Suitable for the protection of fire detection systems, telecommunications interfaces and 2-wire data lines

E

	7P.62.9.009.0485	**7P.62.9.036.0005**
		
	• SPD Type 2+3 • Protection of RS485 data lines, telecommunication and other Bus lines	• SPD Type 2+3 • Protection of fire detection systems, telecommunication and other data/Bus lines
	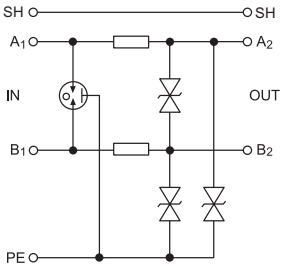	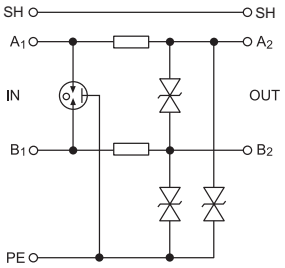

For outline drawing see page 24

SPD specification					
Nominal voltage (U_N)	V DC	6		24	
Maximum operating voltage (U_C)	V DC	8.5		36	
Nominal load current (I_L)	A	0.5		0.5	
C2 nominal discharge current (8/20 µs) core-core (I_n)	kA	5		5	
C2 total discharge current (8/20 µs) cores-PE (C)	kA	10		10	
C2 voltage protection level mode core-core @ I_n (U_p)	V	18		50	
C2 voltage protection level mode core-PE @ I_n (U_p)	V	30		65	
C3 voltage protection level mode core-core @ 1 kV/µs (U_p)	V	12		45	
C3 voltage protection level mode core-PE @ 1 kV/µs (U_p)	V	15		45	
Response time core-core/core-PE (ta)	ns	1/1		1	
Serial resistance per core (R)	Ω	1.6		1.6	
Treshold frequency core-core (f)	MHz	1		4	
Other technical data					
Range of operating temperature	°C	–40…+70		–40…+70	
Degree of protection		IP 20		IP 20	
Wire size		solid cable	stranded cable	solid cable	stranded cable
	mm²	4	2.5	4	2.5
	AWG	12	14	12	14
Approvals (according to type)		CE UKCA		CE UKCA	

X-2021, www.findernet.com

Data line SPD for Ethernet Cat. 6

- Suitable for Ethernet, POE (Power over Ethernet) and dataline transmission system up to 250 MHz
- Protection of all pairs of conductors with minimum attenuation
- Aluminum chassis and RJ45 in metal screens
- Included accessories for simple installation near the equipment to be protected, LPZ boundary 2-3 (Type 3)
- Complies to EN 61643-21
- Mounting on 35 mm DIN rail

7P.68.9.060.0600



- Ethernet Cat 6 - 60 V
- Shielded RJ45 connectors

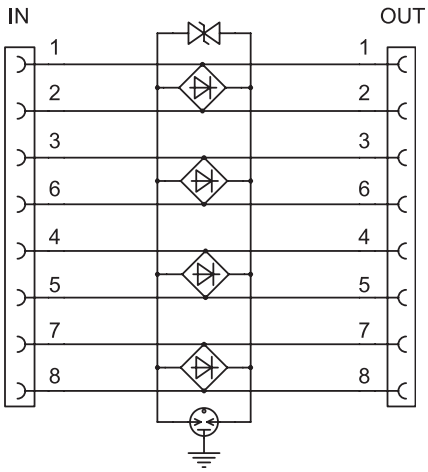

For outline drawing see page 24

SPD specification		
Nominal voltage of system (U_N)	V DC	48
Maximum operating voltage (U_C)	V DC	60
Nominal current (I_L)	mA	500
C2 total nominal discharge current (8/20 µs) line - PG (I_n)	kA	1.6
C2 nominal discharge current (8/20 µs) line-line (I_n)	A	200
Voltage protection level line-line @ I_n (C2) - (U_p)	V	130
Voltage protection level line-PG @ I_n (C2) - (U_p)	V	350
Voltage protection level line-line @ 1 kV/µs (C3) - (U_p)	V	130
Insertion attenuation @ 250 MHz	dB	< 2
Response time	ns	1
Other technical data		
Ambient temperature range	°C	–40…+80
Degree of protection		IP 20
Input-Output connection		RJ45/RJ45 shielded
Approvals (according to type)		CE UKCA

Ordering information

Example: 7P series, surge protection device, Type 2, single phase (U_C = 275 V), 1 varistor + 1 encapsulated spark gap, with remote status signalling contact, I_n = 20 kA

7	P	.	2	2	.	8	.	2	7	5	.	1	0	2	0

Series

Type
0 = Combined type 1 + 2 arresters high discharge capability
1 = Type 1+2 high performance "Low U_p" surge arresters
2 = Type 2 surge arresters
3 = Type 3 surge arresters
4 = Type 2 surge arrester without leakage current
6 = Data line SPD

Circuit
1 = Single phase (1 varistor)
2 = Single phase (1 varistor + 1 spark-gap), protected poles (data line SPD)
2 = Protected poles (Data line SPD)
3 = Three-phase (3 varistors)
4 = Three-phase (3 varistors + 1 spark-gap)
5 = Three-phase (4 varistors)
6 = 2 varistors + 1 spark-gap
6 = 1 varistors + 1 spark-gap(7P.36)
7 = Single phase (2 varistors) Type 2 (7P.27)
7 = Single phase (1 varistor + 1 spark gap) Type 3, DIN rail mounting (7P.37)
8 = Protected poles (Data line SPD)
9 = N-PE spark-gap for three phase system
0 = Spare module

Supply version
1 = N+PE connection (only for single spark gap replaceable module and 7P.09)
8 = AC (50/60 Hz)
9 = DC (PV application and Data line SPD)

Supply voltage
000 = N+PE connection for spark gap modules
009 = 8.5 V DC Max (U_C) SPD Data line SPD
036 = 36 V DC Max (U_C) SPD Data line SPD
060 = 60 V DC Max (U_C), Data line SPD
075 = 75 V AC Max
130 = 130 V AC Max
440 = 440 V Max (U_C) for SPD Type 2 (for U_N = 400 V AC)
275 = 275 V Max for SPD Type 1+2 "Low U_p", Type 2 (U_C) (for U_N = 230-240 V AC) and Type 3
260 = 260 V Max (U_C) for SPD Type 1+ 2 (for U_N = 230-240 V AC)
255 = 255 V Max (U_C) for SPD Type 1, N+PE (7P.09)

Supply voltage PV SPD
UCPV >= 1.2 Uoc STC
000 = 1000 V DC UCPV SPD T1+2 (7P.03.9), 1020 V DC UCPV PV SPD T2 (7P.23.9, 7P.26.9)
500 = 1500 V DC UCPV
750 = 750 V DC UCPV

Nominal discharge current
100 = 100 kA (I_{imp} Type 1) only for 7P.09, N-PE GDT for 7P.04
050 = 50 kA (I_{imp} Type 1 N-PE GDT for 7P.02)
025 = 25 kA (I_{imp} Type 1+2)
020 = 20 kA (I_n Type 2)
015 = 15 kA (I_n Type 2)
012 = 12.5 kA (I_{imp} Type 1+2)
003 = 3 kA (I_n @ U_{oc} only for 7P.36 and 7P.37)
005 = 5 kA (I_n @ U_{oc} for 7P.31, 7P.32 and 7P.62)
007 = 7.5 kA (I_{imp} Type 1+2)
107 = 7.5 kA (I_{imp}Type 1+2) with remote status signalling contact
012 = 12.5 kA (I_{imp} Type 1+2)
112 = 12.5 kA (I_{imp}Type 1+2) with remote status signalling contact
485 = RS485 Modbus protocol (Data line SPD)
600 = Ethernet Cat 6 (Data line SPD)

Remote status signalling contact
0 = Without remote status signalling contact (only some Type 2 SPD and Data line)
1 = Built-in remote status signalling contact
2 = Acoustic fault signalling

Upside down mounting

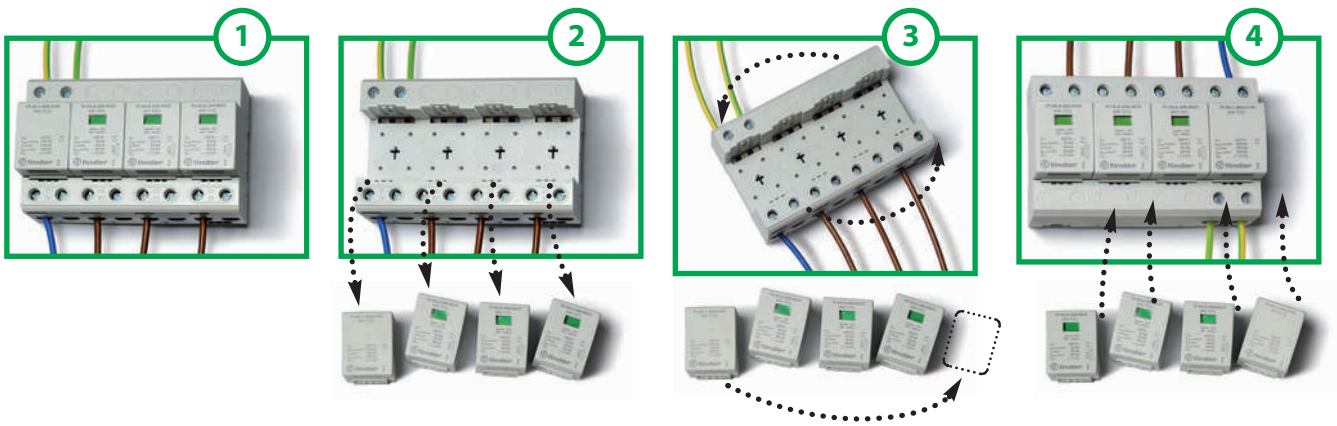

X-2021, www.findernet.com

Replaceable modules



Replacement varistor and modules		7P.00.8.260.0025	7P.00.9.500.0012	7P.00.1.000.0050	7P.00.1.000.0100
		Varistor + GDT	Varistor + GDT	Spark-Gap	Spark-Gap
Maximum operating voltage (U_C/U_{CPV})	V AC/DC	260/—	—/500	255/—	255/—
Lightning Impulse current (10/350 µs) (I_{imp})	kA	25	12.5	50	100
Nominal discharge current (8/20 µs) (I_n)	kA	30	30	50	100
Maximum discharge current (8/20 µs) (I_{max})	kA	60	60	100	100
Voltage protection level (U_p)	kV	1.5	1.8	1.5	1.5
Leakage current (@ 253 V AC) & I_{pe} current	uA	< 4	< 4	< 4	< 4
Response time (t_a)	ns	100	25	100	100
Maximum overcurrent protection		250 A gL/gG	—	—	—



Replacement varistor and modules		7P.10.8.275.0012	7P.10.1.000.0025	7P.00.8.255.0007	7P.00.8.255.0012
		Varistor	Spark-Gap	Varistor + GDT	Varistor + GDT
Maximum operating voltage (U_C)	V AC/DC	275/350	255/—	255/—	255/—
Lightning Impulse current (10/350 µs) (I_{imp})	kA	12.5	25	7.5	12.5
Nominal discharge current (8/20 µs) (I_n)	kA	30	40	20	20
Maximum discharge current (8/20 µs) (I_{max})	kA	60	60	60	60
Voltage protection level (U_p)	kV	1.5	1.5	1.5	1.5
Response time (t_a)	ns	25	100	100	100
Maximum overcurrent protection		160 A gL/gG	—	160	160



Replacement varistor modules		7P.20.8.075.0015	7P.20.8.130.0015	7P.20.8.275.0020	7P.20.8.440.0020	7P.40.8.275.0020
		Varistor	Varistor	Varistor	Varistor	Varistor + GDT
Maximum operating voltage (U_C)	V AC/DC	75/100	130/170	275/350	440/585	275/—
Nominal discharge current (8/20 µs) (I_n)	kA	15	15	20	20	20
Maximum discharge current (8/20 µs) (I_{max})	kA	40	40	40	40	25
Voltage protection level (U_p)	kV	0.4	0.7	1.35	1.9	1.2
Response time (t_a)	ns	25	25	25	25	100
Maximum overcurrent protection		160 A gL/gG	160 A gL/gG	160 A gL/gG	125 A gL/gG	125 A gL/gG



Replacement varistor modules		7P.20.9.375.0020	7P.20.9.500.0015	7P.20.9.750.0015
		Varistor	Varistor	Varistor
Maximum operating voltage (U_C/U_{CPV})	V AC/DC	—/375	—/510	—/750
Nominal discharge current (8/20 µs) (I_n)	kA	20	15	15
Maximum discharge current (8/20 µs) (I_{max})	kA	40	40	40
Voltage protection level (U_p)	kV	1.8	2	3.2
Response time (t_a)	ns	25	25	25
Maximum overcurrent protection		—	—	—

Replacement modules		7P.20.1.000.0020	7P.20.1.000.9015	7P.40.1.000.0020
		Spark-Gap	Spark-Gap	Spark-Gap
Maximum operating voltage (U_C/U_{CPV})	V AC/DC	255/—	—/1020	255/—
Nominal discharge current (8/20 µs) (I_n)	kA	20	15	20
Maximum discharge current (8/20 µs) (I_{max})	kA	40	30	40
Voltage protection level (U_p)	kV	1.5	2.5	1.5
Response time (t_a)	ns	100	100	100
Maximum overcurrent protection		—	—	—

Temporary Overvoltage (TOV)		7P.32, 7P.36, 7P.37
Transient OverVoltage 5 s L-N (U_{TOV})	V	335
Transient OverVoltage 5 s L-PE (U_{TOV})	V	400
Transient OverVoltage 200 ms L-PE (U_{TOV})	V	1430

E

Outline drawings

Type 7P.09
Screw terminal

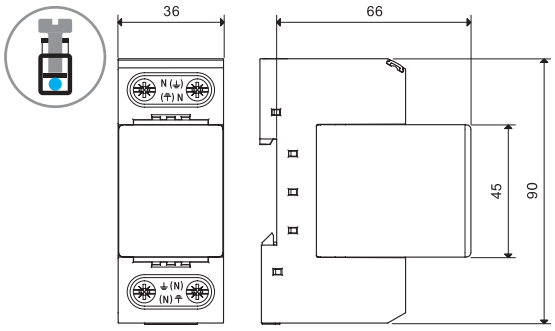

Type 7P.01
Screw terminal

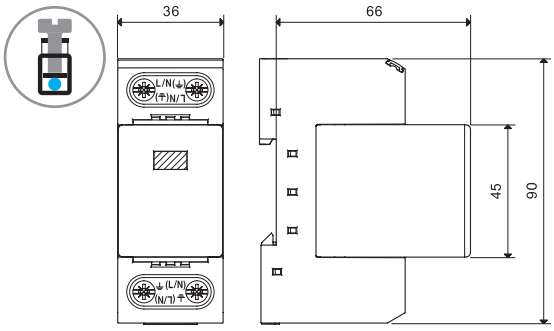

Type 7P.02
Screw terminal

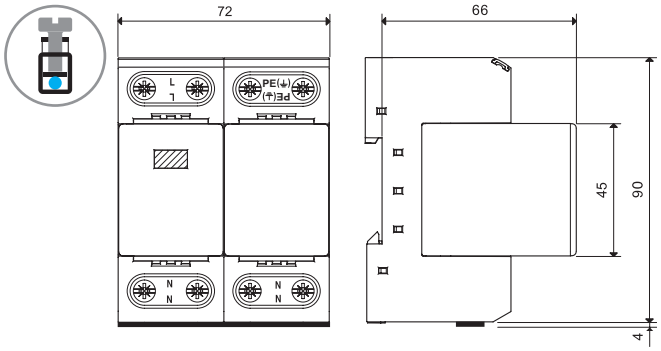

Type 7P.03
Screw terminal

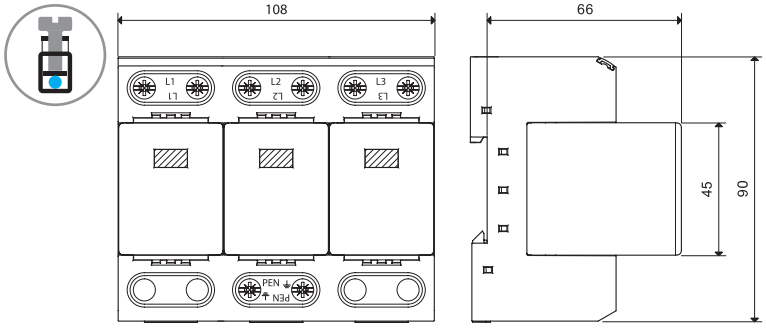

Type 7P.04
Screw terminal

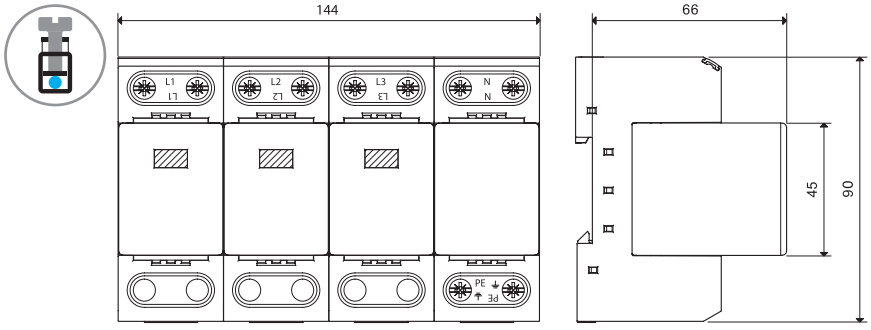

X-2021, www.findernet.com

Outline drawings

Type 7P.02.8.275.1012
Screw terminal

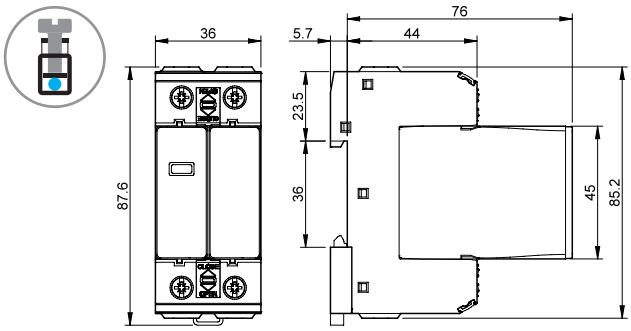

Type 7P.04.8.275.1012
Screw terminal

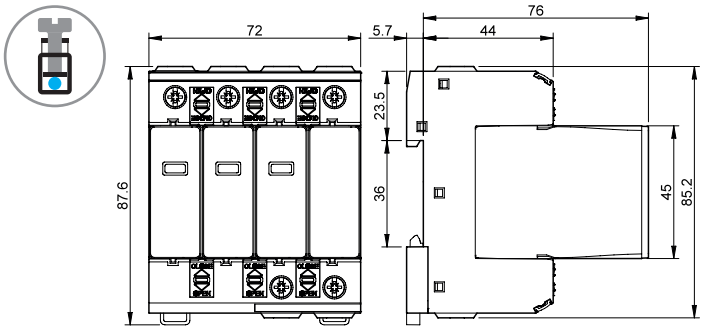

Type 7P.05.8.275.1012
Screw terminal

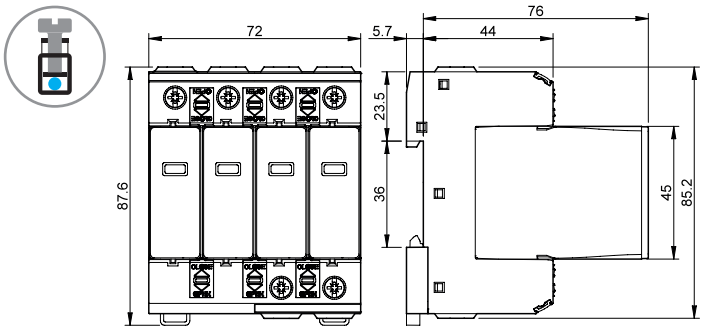

E

Outline drawings

Type 7P.05
Screw terminal

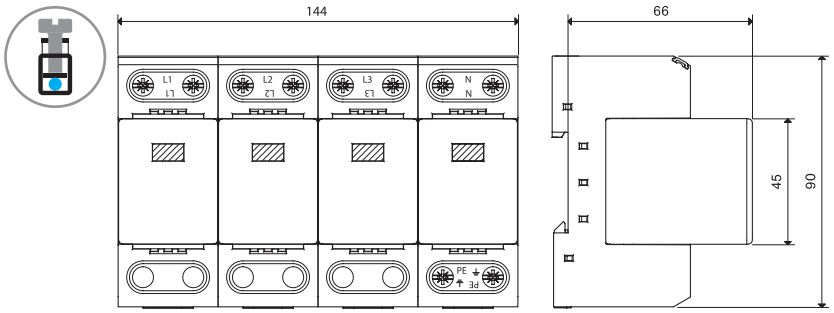

Type 7P.12
Screw terminal

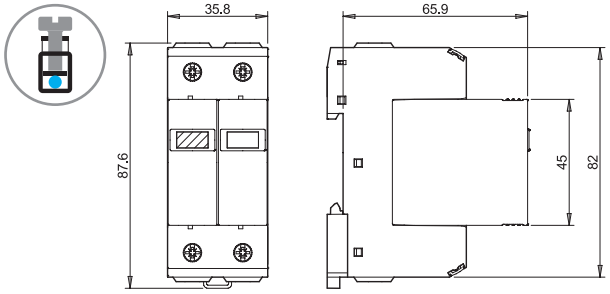

Type 7P.13
Screw terminal

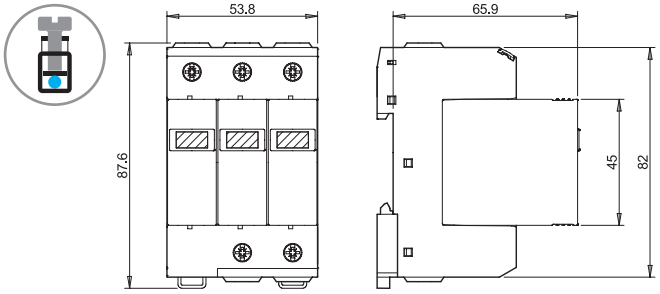

Type 7P.14
Screw terminal

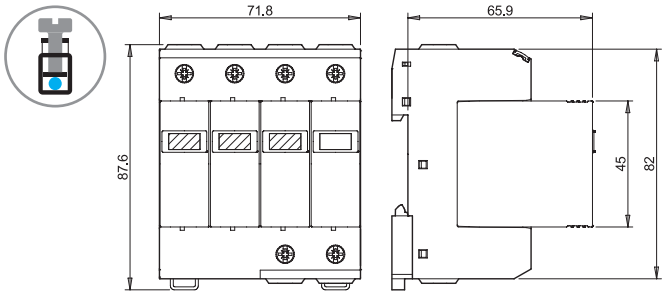

Type 7P.15
Screw terminal

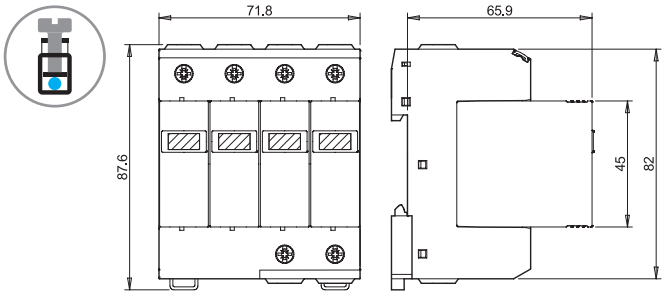

Type 7P.21
Screw terminal

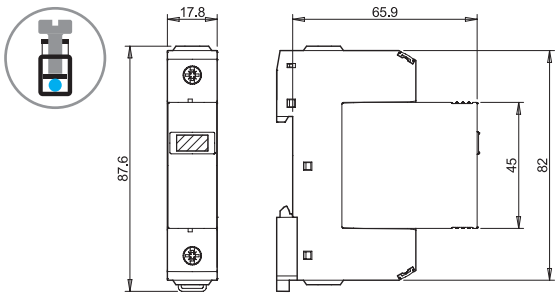

Types 7P.22 / 7P.27 / 7P.42
Screw terminal

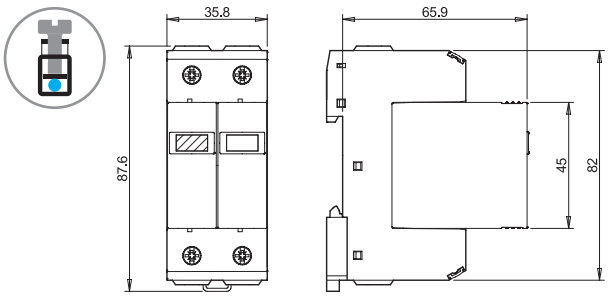

E

X-2021, www.findernet.com

Outline drawings

Types 7P.23.8 / 7P.43
Screw terminal

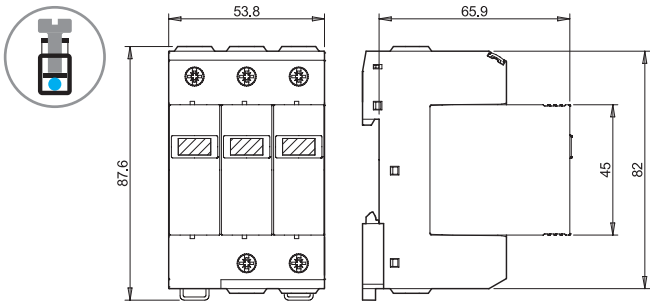

Types 7P.24 / 7P.44
Screw terminal

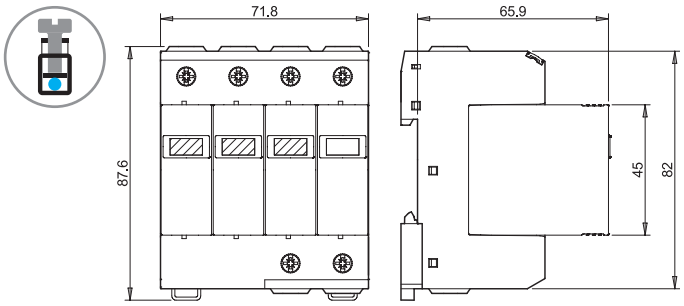

Type 7P.23.9
Screw terminal

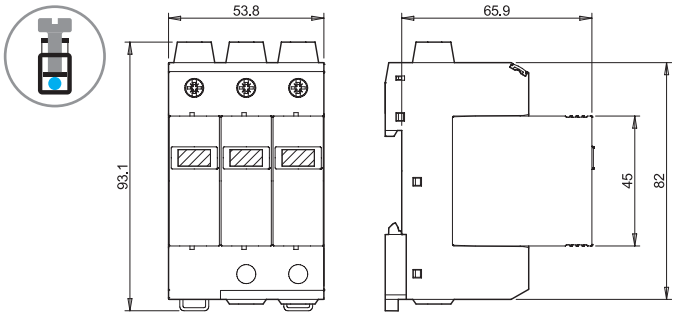

Types 7P.25 / 7P.45
Screw terminal

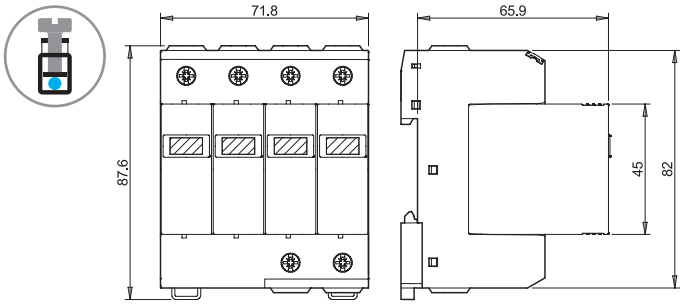

Type 7P.26.9.000.1015
Screw terminal

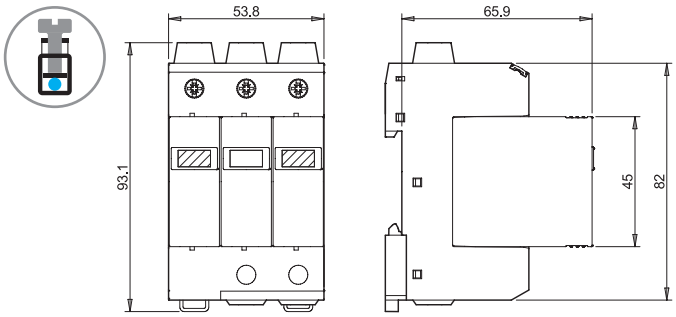

Type 7P.23.9.000.6020
Screw terminal

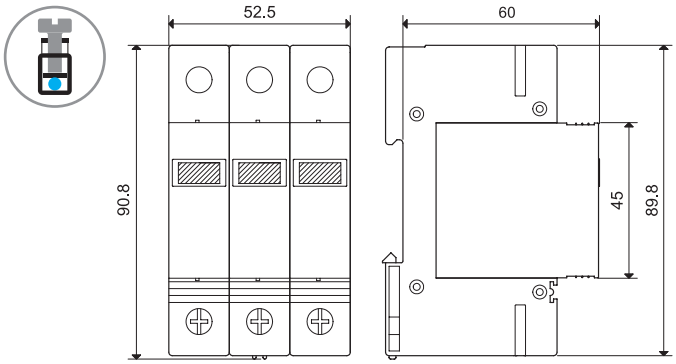

Type 7P.37.8.275.1003
Screw terminal

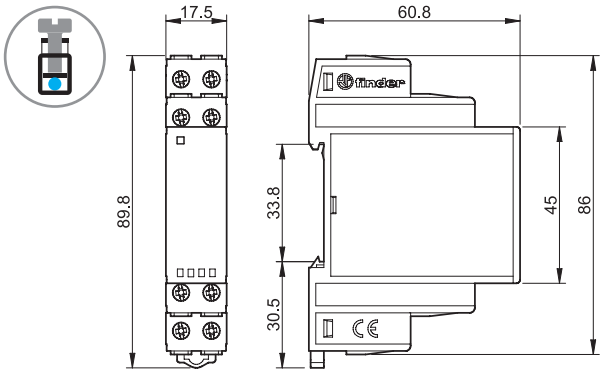

E

Outline drawings

Type 7P.68.9.060.0600

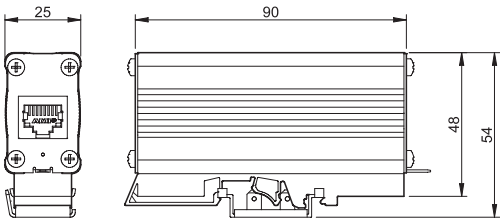

Types 7P.62.9.036.0005/7P.62.9.009.0485
Screw terminal



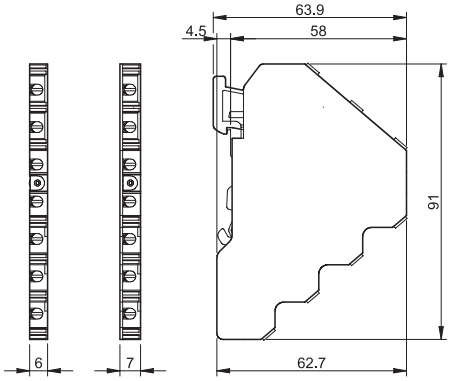

Type
7P.36.8.275.2003

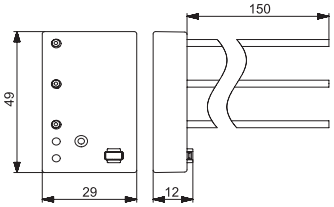

Types
7P.31.8.275.0005/7P.32.8.275.0005

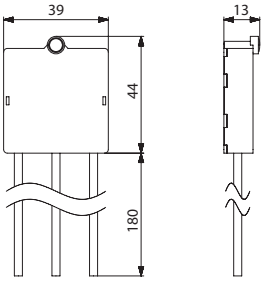

Type 7P.00
Replaceable module

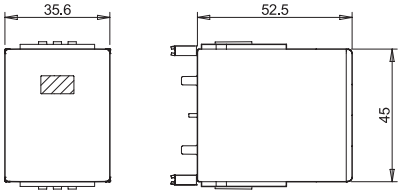

Type 7P.10/20
Replaceable module

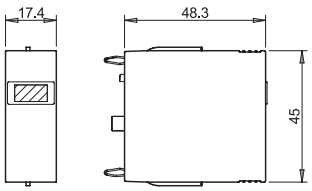

07P.01
Connector



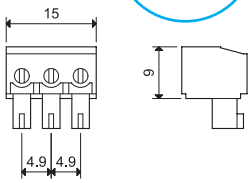

X-2021, www.findernet.com

Installation example - SPD Type 1 + 2

TT-SINGLE PHASE SYSTEM - SPD UP-STREAM OF RCD

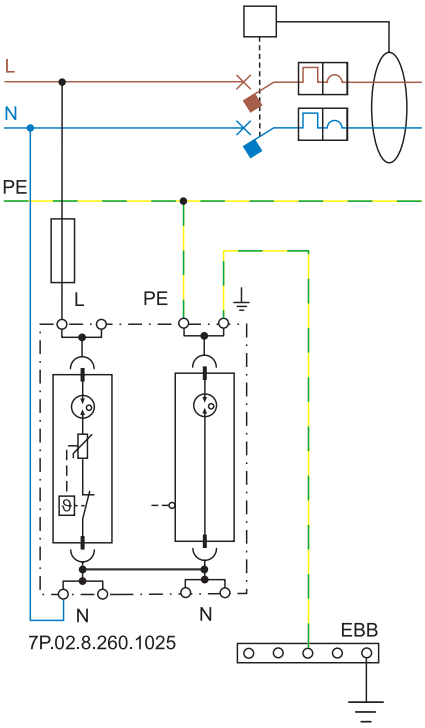

TT-THREE PHASE SYSTEM - SPD UP-STREAM OF RCD

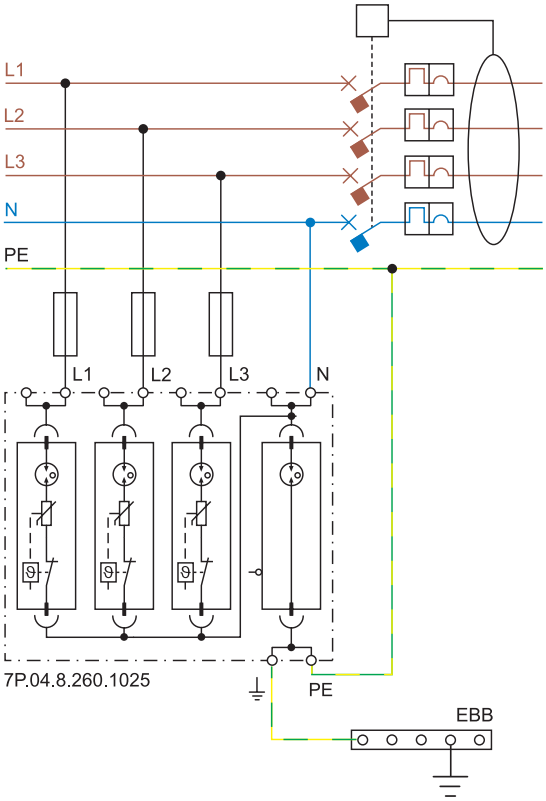

Wiring diagrams "V-shape" (fuse max = 125 A)

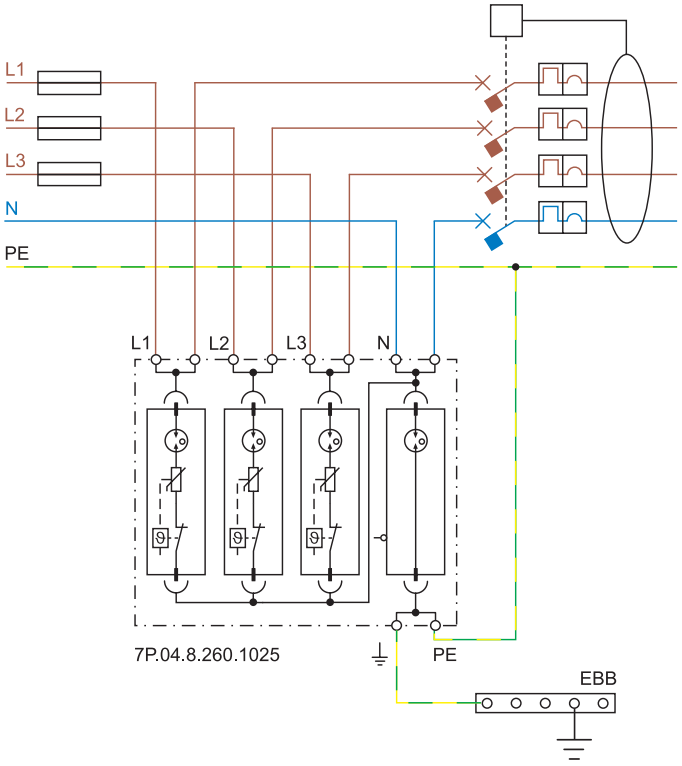

E

Installation example for SPD Type 1 + 2 and Type 2 - Single phase

TT-SINGLE PHASE SYSTEM - SPD UP-STREAM OF RCD

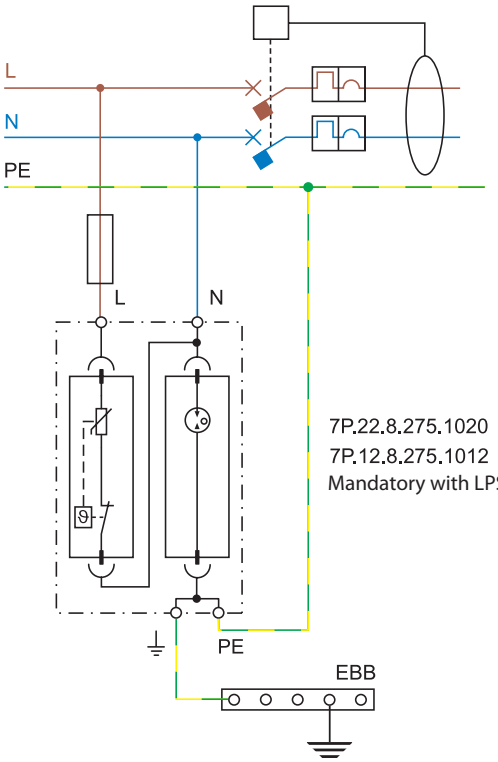

7P.22.8.275.1020
7P.12.8.275.1012
Mandatory with LPS

TT or TN-S SINGLE PHASE SYSTEM - SPD DOWN-STREAM OF RCD

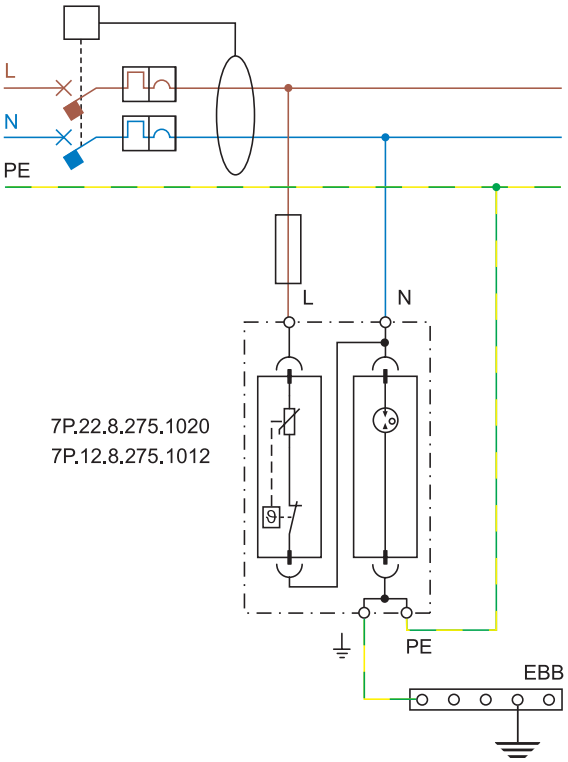

7P.22.8.275.1020
7P.12.8.275.1012

TN-S SINGLE PHASE SYSTEM - SPD DOWN-STREAM OF RCD

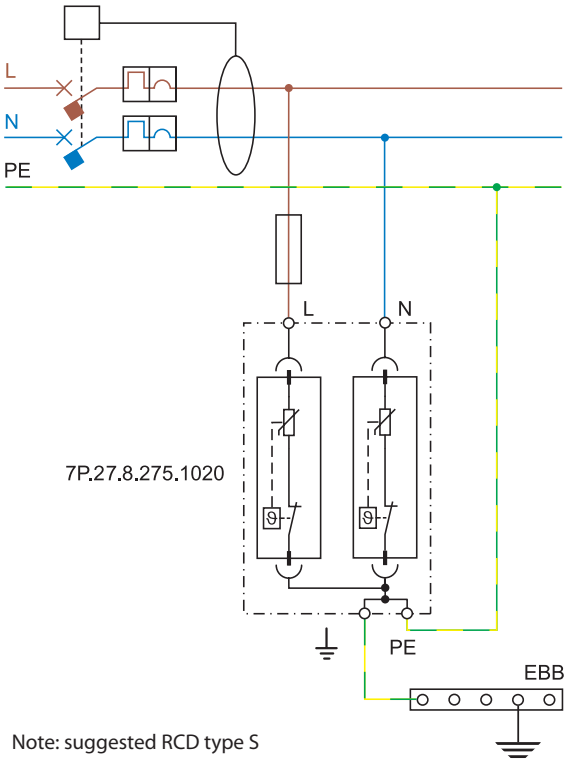

7P.27.8.275.1020

Note: suggested RCD type S

Installation example for SPD Type 3

TT or TN-S SINGLE PHASE SYSTEM - INCORPORATED IN SOCKET OUTLET

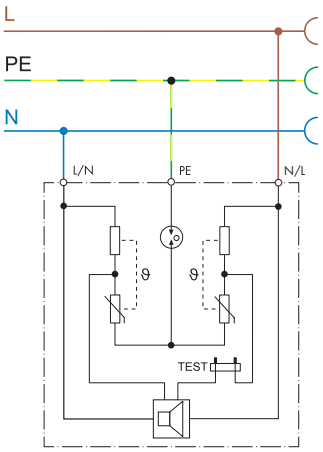

7P.36.8.275.2003

X-2021, www.findernet.com

Installation example for SPD Type 1 + 2 and Type 2 - Three phase

TT-THREE PHASE SYSTEM - SPD UP-STREAM OF RCD

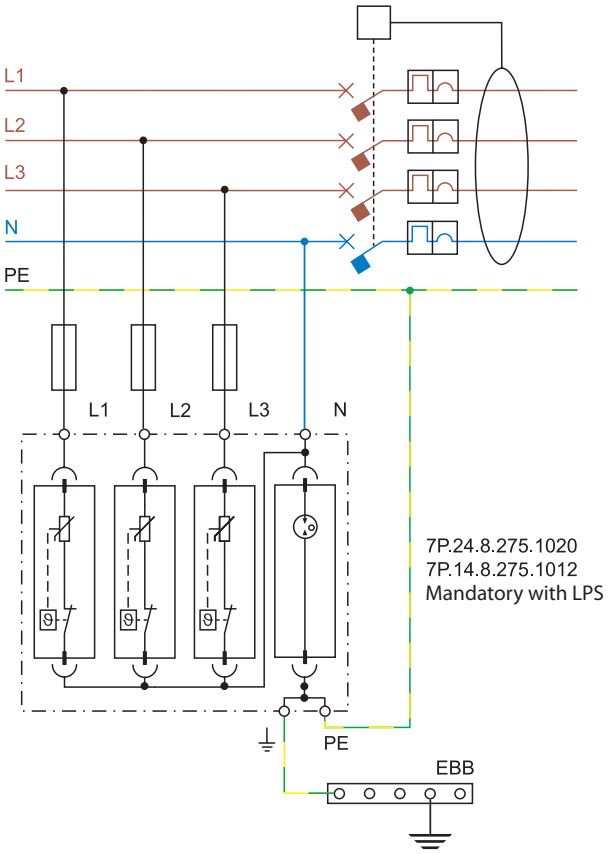

TT or TN-S THREE PHASE SYSTEM - SPD DOWN-STREAM OF RCD

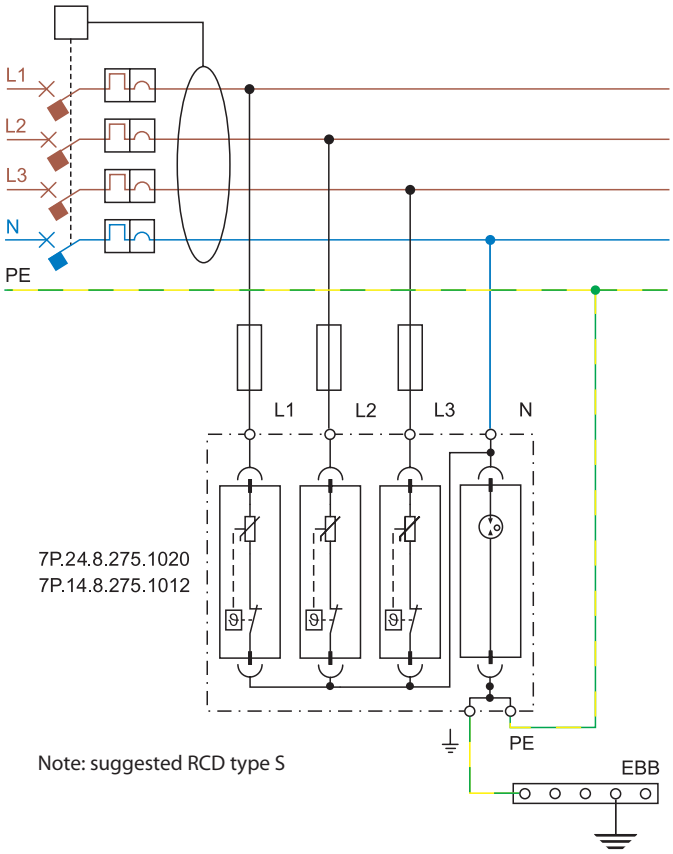

Note: suggested RCD type S

TN-S THREE PHASE SYSTEM - SPD DOWN-STREAM OF OVERCURRENT PROTECTION

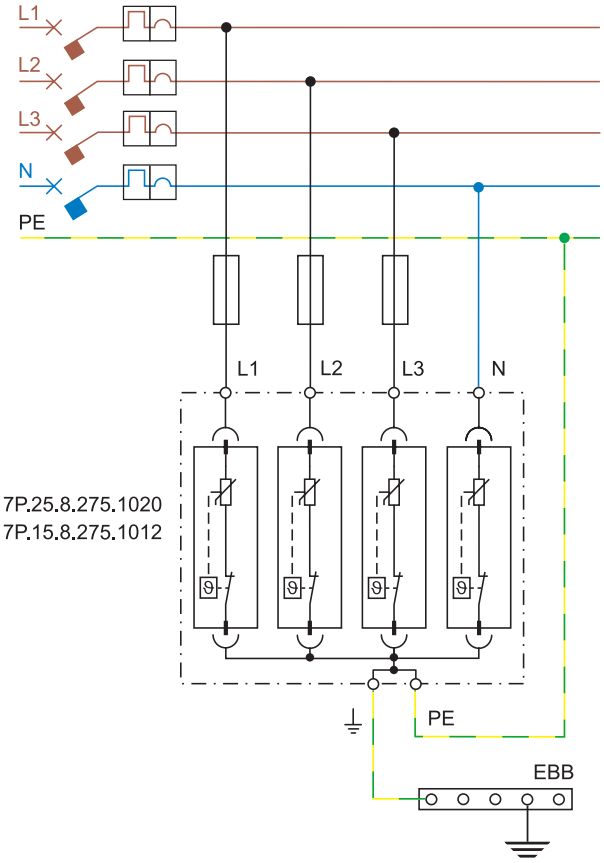

TN-C THREE PHASE SYSTEM - SPD UP-STREAM OF OVERCURRENT PROTECTION

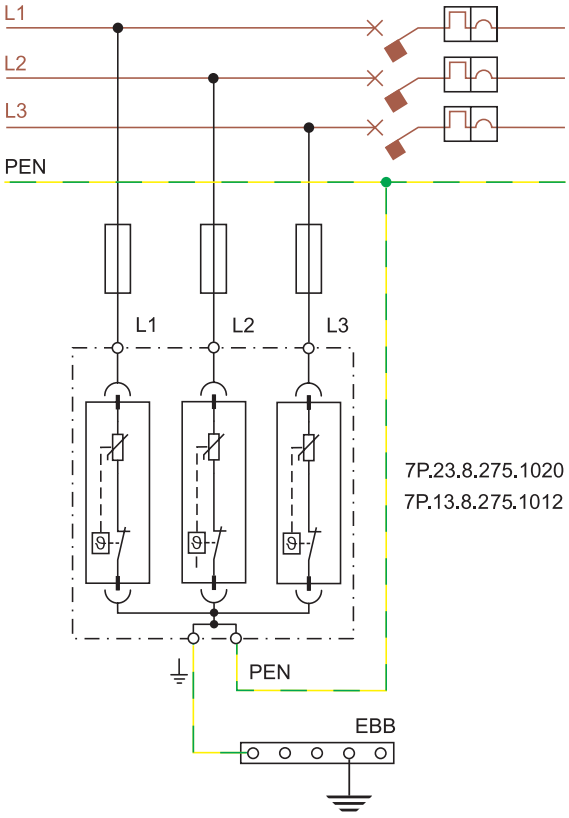

Installation example for SPD Type 3 - Single phase

TT or TN-S SINGLE PHASE SYSTEM - SPD DOWN-STREAM OF RCD
Serial connection

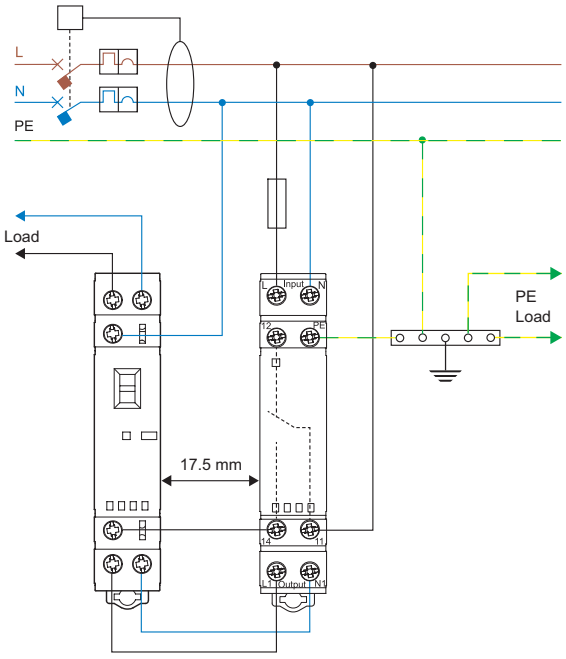

22.32.0.230.X440 7P.37.8.275.1003

TT or TN-S SINGLE PHASE SYSTEM - SPD DOWN-STREAM OF RCD
Serial connection + BUS line

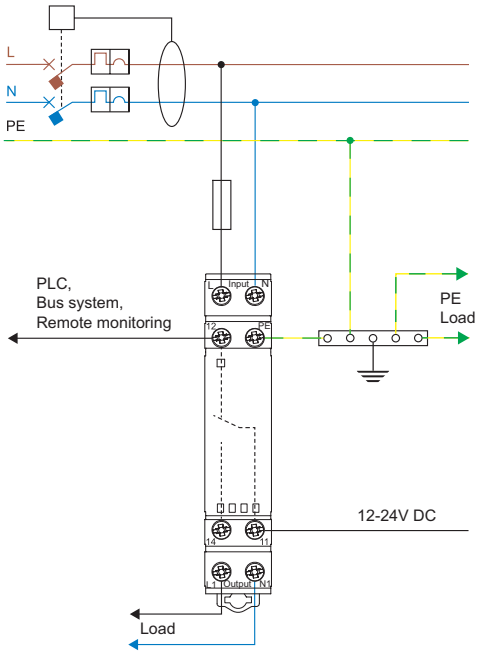

7P.37.8.275.1003

TT, TN-S SINGLE PHASE: parallel connection

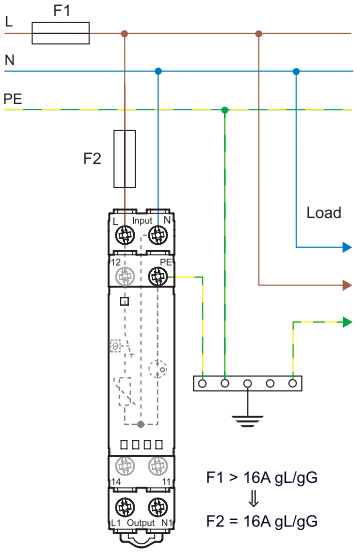

Function

Visual local LED signalling and remote signalling of varistor status

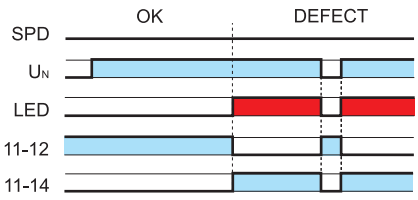

E

X-2021, www.findernet.com

L7P Temperature/Current diagram for model 7P.37

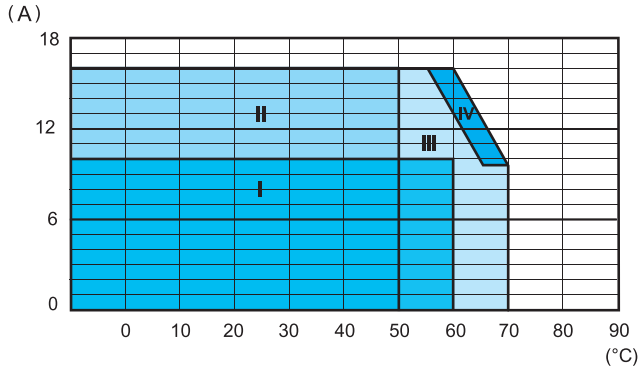

Zone I: SPD and other devices installed as a group (without gap)

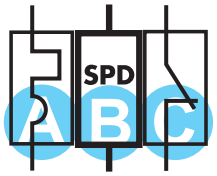

- A MCB = B10A, C10A
- B 7P.37.8.275.1003
- C 22.32.0.xxx.x4x0

Zone II: SPD spaced, at least from one side, from components that generate heat during their operation (17.5 mm gap)

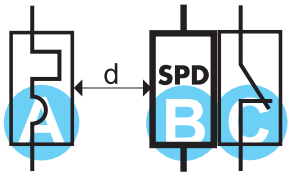

- A MCB = B16A, C16A
- B 7P.37.8.275.1003
- C 22.32.0.xxx.x4x0
- d 17.5 mm



- A MCB = B16A, C16A
- B 7P.37.8.275.1003



- B 7P.37.8.275.1003
- D 22.32.0.xxx.x3x0
  22.32.0.xxx.x4x0

Zone III: SPD spaced, on both side, from components that generate heat during their operation (20 mm gap)

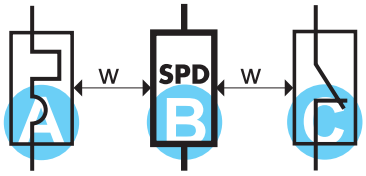

- A MCB = B16A, C16A
- B 7P.37.8.275.1003
- C 22.32.0.xxx.x4x0
- W 20 mm

Zone IV: SPD installed individually in free air (without significant influence from nearby components)



- B 7P.37.8.275.1003

Installation examples - photovoltaic

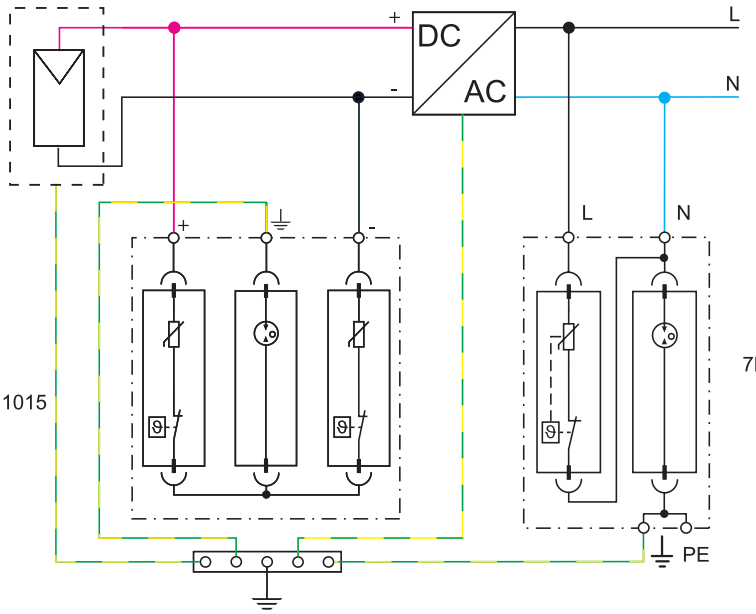

7P.26.9.000.1015

7P.22.8.275.1020

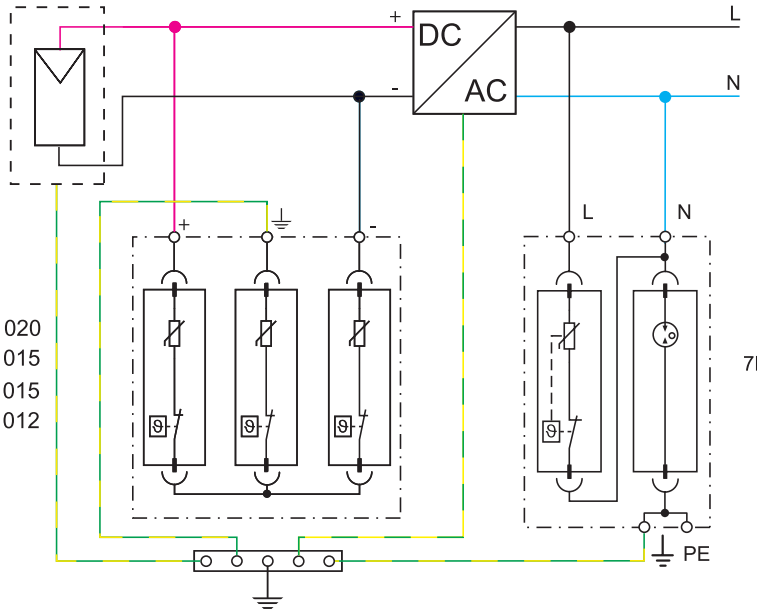

7P.23.9.750.1020
7P.23.9.000.1015
7P.23.9.200.1015
7P.03.9.000.1012

7P.22.8.275.1020

X-2021, www.findernet.com

SURGE VOLTAGE PROTECTORS

Surge voltage protectors (such as Finder's Surge Protection Devices, SPD) are intended to be installed in electrical systems, to protect people and machines from surge voltages that can occur on the electrical supply line and which would otherwise have disastrous consequences. These surge voltages can be atmospheric (lightning) or can originate on the electrical system due to, for example: the opening and closing of large loads, short circuits, or the switching of large power factor correction capacitors. The SPD can be described as a switch that is in parallel with the electrical system's supply line - which it is protecting. At the nominal network voltage (e.g. 230 V) the SPD appears as an open switch, having a very high impedance (almost infinite). But, under an overvoltage condition its impedance rapidly falls to near 0 Ω. This effectively applies a short circuit across the supply lines and immediately "drains" the overvoltage to earth. In this way the supply line is protected wherever an SPD is installed. When the overvoltage has passed, the SPD impedance rises rapidly and resumes the state of an open switch again.

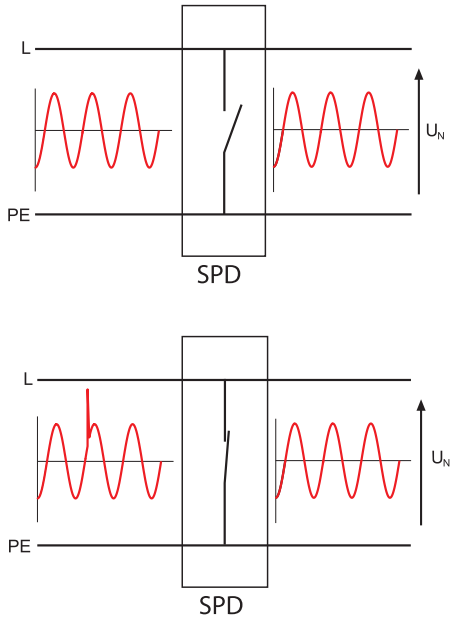

Figure 1: Ideal operation of an SPD

SPD technologies

Finder surge voltage protectors use either varistors or spark gaps.

Varistor: This can be considered as a variable resistance that at nominal voltage has a very high ohmic value. But the resistance rapidly falls to near zero as the voltage surges. In this way the varistor applies a near short circuit which clamps the surge voltage. The varistor is however subject to progressive degradation due to the small leakage current that occurs at the nominal voltage, and with the number of interventions. With every overvoltage that occurs the leakage current rises and accelerates the end of life for the device - which is ultimately indicated by the change from green to red in the signal-window.

Spark gap: This comprises two electrodes separated by air, or a gas. When a surge voltage occurs an electrical arc bridges the gap and a surge current flows to limit the surge voltage to a low and constant level. The arc extinguishes only when the surge current falls below about 10 ampere. The gas guarantees a constant level of breakdown voltage since the arc is struck in a protected environment; not exposed to pressure or humidity variations or impurities as would happen if it had occurred in air. There is however, a delay before the device arcs and the surge current is diverted, and this is dependent on the magnitude of the original voltage surge and on its rate of rise. Therefore, the voltage protection level can vary, although it is guaranteed to be less than U_p.

Component	Symbol	Leakage current	Energy dissipated	Response time	Voltage/Current characteristic
Ideal		0	High	Fast	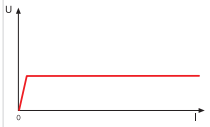
Spark gap		0	High	Medium	
Varistor		Very Low	Medium	Fast	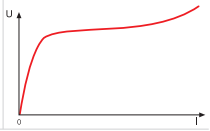

Figure 2: SPD component characteristics.

Installation (Overvoltage) categories

Choosing the SPD requires matching the Rated Impulse Voltage of the SPD with that of the equipment to be protected. This in turn relates to the Installation category (Overvoltage category). Installation categories are described within IEC 60664-1, which for a 230/400 V installation prescribes as follows:

- **Installation category I:** 1.5 kV for "particularly sensitive" equipment (e.g. electronic devices like PC or TV set);
- **Installation category II:** 2.5 kV for "user" equipment subject to "normal" impulse voltages (e.g. household electrical appliances, mobile items);
- **Installation category III:** 4 kV for equipment that are part of a fixed installation (e.g. switchboards, switches)
- **Installation category IV:** 6 kV for equipment installed at or near the origin of main incoming supply mains (e.g. energy meters).

Lightning Protection Zones and installation considerations

International standards refer to the various Lightning Protection Zones by the letters LPZ followed by an appropriate number.

LPZ 0A: An external area, where a direct lightning strike is possible and where there is total exposure to the electromagnetic field induced by the lightning.

LPZ 0B: An external area, but below a lightning conductor providing direct lightening strike protection. There remains total exposure to the electromagnetic field.

LPZ 1: Area within a building – therefore protected from direct lightning strike. The electromagnetic field will be attenuated, depending on the degree of shielding. This zone has to be protected by SPD type 1 device(s) at its boundary with the LPZ 0A or 0B zone.

LPZ 2: An area, typically a room, where the lightning current has been limited by preceding surge protectors. This zone has to be protected by SPD type 2 device(s) at its boundary with the LPZ 1 zone.

LPZ 3: An area within a room where the lightning current has been limited by preceding surge protectors (typically the wiring after a socket or an area within a metal enclosure).

This zone has to be protected by SPD type 3 device(s) at its boundary with the LPZ 2 zone. On the following picture (Figure 3, representation is not binding) it is shown that the transition from a protection zone to the next is through the installtion of SPD. SPD Type 1 must be connected upstream the system, at the point of delivery connection. As an alternative it is possible to use SPD Type 1+2. The grounding conductor must have a minimum section of 6 mm² for SPD Type 1, of 4 mm² for SPD Type 2, and 1.5 mm² for SPD Type 3 (If the building has an LPS, reference should be made to CEI 81-10/4 for the correct dimension of the cable).

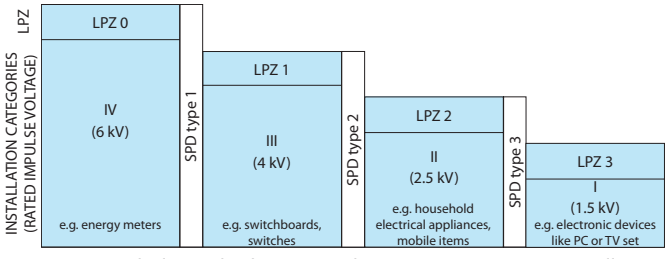

Figure 3: Typical relationship between Lightning Protection Zones, Installation Categories and SPD types

Rated values and marking common to all SPD

[U_C] Maximum continuous operating voltage: Under this voltage the SPD is guaranteed to appear as an "open switch". This voltage is normally at least equal to the nominal supply voltage (U_N) +10%. For the Finder SPD, U_C is specified as 275 V.

[U_p] Voltage protection level: This is the highest voltage level seen across the SPD during its intervention. For example, for Finder SPD Type 2, this means that a 4 kV overvoltage would be limited by the SPD to a maximum 1.2 kV. Consequently, electronic devices such as PC, TV, stereo, etc. are protected - as their own internal protection will handle overvoltages U_p to 1.5 kV.
To better understand this concept; imagine that the SPD is a switch in series a low resistance. In the case of an overvoltage the switch closes and all the current goes through the resistance. According to Ohm's law the voltage developed across the resistance will be this resistance x the current (V = R x I), and will be limited to < U_p.

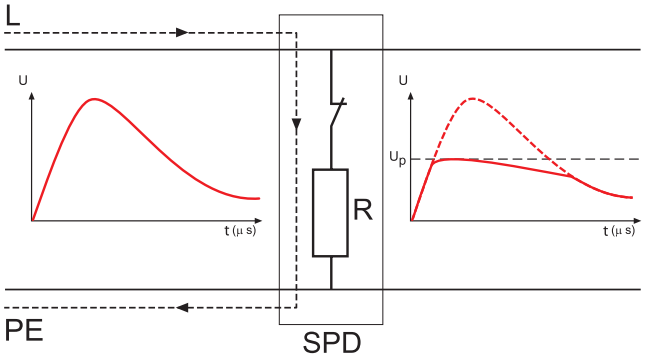

Figure 4: Overvoltage limiting

Short circuit proof: A further characteristic, not normally marked on the product but important for its correct installation, is the Short circuit proof at maximum overcurrent protection. This is the maximum short-circuit current that the SPD is able to withstand when it is installed with additional maximum overcurrent protection - such as a fuse rated in accordance with the value stated under the SPD specification. Consequentely the maximum prospective short-circuit current of the system at the point of installation of the SPD must not exceed this value.

Rated vaules and marking of SPD Type 1

SPD Type 1 must be connected upstream the system, at the point of delivery of power energy. SPD protects building and people from the risk of direct lightning (fire and death) and are characterized by:

[I_{imp}10/350] Impulse current: I_{imp} corresponds to the peak value of a 10/350 µs current impulse waveform. This waveform represents a direct lightning strike and is used in tests to prove the performance of SPD type 1 devices.

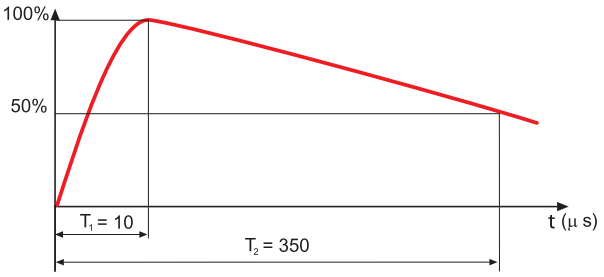

Figure 5: 10/350 µs current waveform

Comparison of the waveforms in figures 5 and 6 shows the much higher energy content controlled by the type 1 SPD.

[I_n8/20] Nominal discharge current: The peak current (and waveform shape) through the SPD under conditions prescribed by EN 62305 to represent the surge current as a consequence of a lightning strike to the electric supply line.

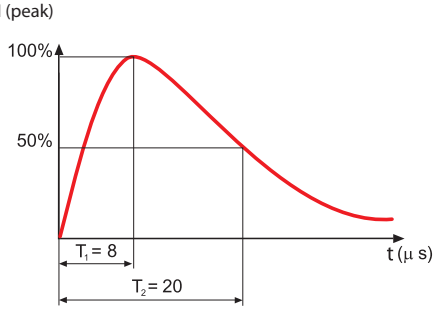

Figure 6: 8/20 µs current waveform

Rated values and marking of SPD Type 2

SPD Type 2 devices are designed to remove all the overvoltage from supply circuits that are not likely to be directly hit by lightning. SPD Type 2 are connected downstream SPD Type 1 or SPD Type 1+2, (minimum distance 1 m) and they protect machine and tools connected to the ground and reduce the risk of economic loss.
SPD Type 2 are characterized by:

[I_n8/20] Nominal discharge current: The peak current (and waveform shape) through the SPD under conditions prescribed by EN 62305 to represent the surge current as a consequence of a lightning strike to the electric supply line.

[I_{max}8/20] Maximum discharge current: Peak value of the highest current of a 8/20 µs waveform that an SPD can discharge at least once without breaking.

Rated values and marking of SPD Type 3

SPD type 3 devices are used to protect the end user from overvoltage.
They may be installed in supply networks where SDP types 1 and/or 2 already exist. They can be installed in fixed or mobile sockets and have the following characteristic parameters.

U_{oc}: test voltage. This is the peak value of the no load voltage of the combined test-generator; this has a waveform of 1.2/50 µs (figure 7) and can supply at the same time current with waveform 8/20 µs (figure 6).

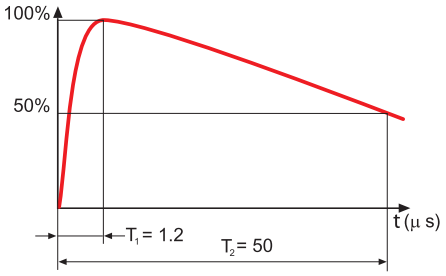

Figure 7: 1.2/50 µs voltage waveform

Suggestion for the connection

The correct connection of SPD requires a shortest as possible connection to the local equipotential bar, to which are connected PE cables of the equipment to be protected. From the local equipotential bar there is a connection to the EBB. The phase wiring remains appropriate to the load.

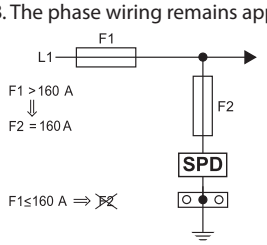

X-2021, www.findernet.com

Short-circuit protection for the SPD is provided by the overcurrent protective devices (fuses type gL/gG) recomended.

In AC applications if the overcurrent protective devices F1 (which are part of the installation) have a rating smaller than or equal to the maximum recommended rating for the overcurrent protective devices for the SPD, then F2 (back up fuse), can be omitted.

7P.0X:

If F1 > 250 A, then F2 = 250 A

If F1 <= 250 A, F2 can be omitted

7P.1X, 7P.2X:

If F1 > 160 A, then F2 = 160 A

If F1 <= 160 A, F2 can be omitted

For DC applications the back up fuse must be always used.

Coordination of SPD

Optimal protection from surges requires cascaded coordinated SPDs. Coordination has the purpose of splitting the energy associated with voltage across the SPDs and it is achieved by introducing an impedance between the SPDs, or alternatively, by connecting them using wires having the minimum length indicated in the figures below, in order to use the cable's own impedance.

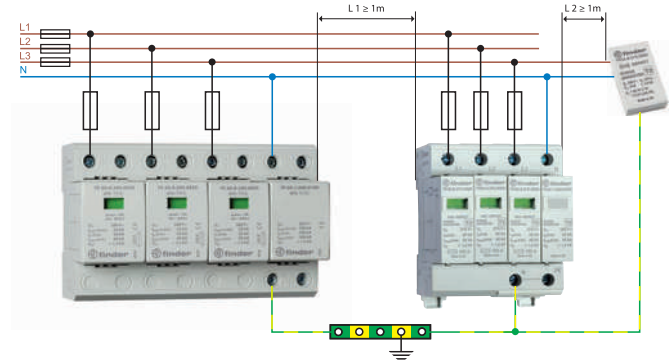

7P.0X 7P.2X 7P.36

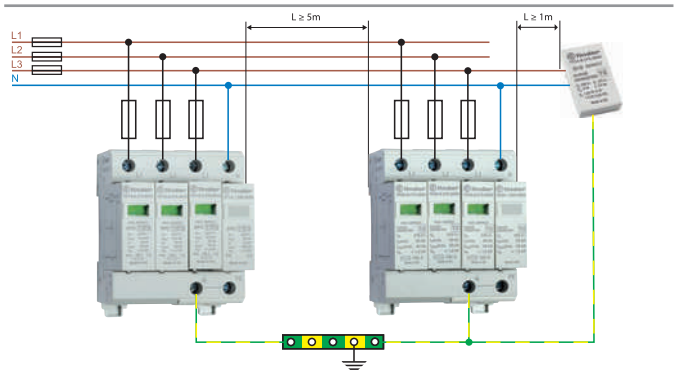

7P.1X 7P.2X 7P.36

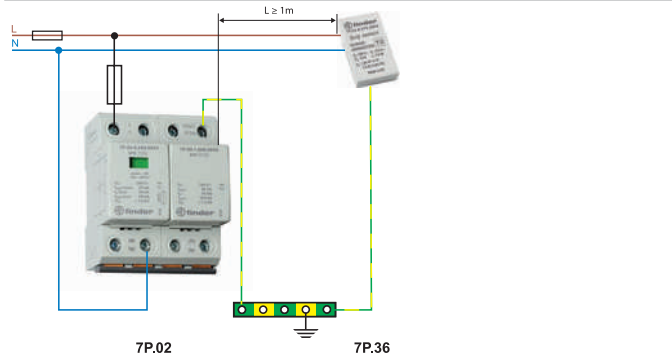

7P.02 7P.36

V-shape connection

Using a V-shaped connection eliminates transferring downstream the inductive voltage generated by the surge current in the connecting wire to the SPD. This increases the protection to the system and equipment downstream. A limitation of this connection is that the nominal current for the downstream system is limited to 125 A, which is the maximum current permitted through the double SPD terminals.

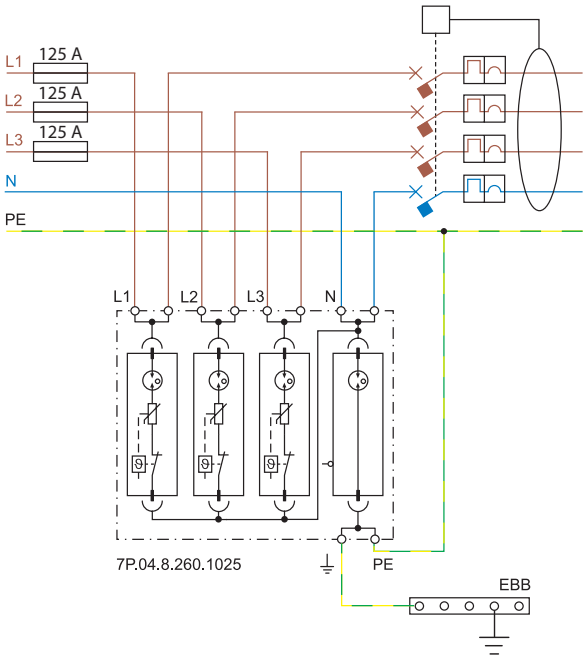

For systems where the rated current is greater than 125 A, it is necessary to connect the SPD in parallel with the equipment (E/I).

Connecting cable

Depending on the type of connection, serial (V-shape) or parallel (T-shape), ensure that both the maximum cable lengths and minimum cross section of the connecting wires are respected in accordance with the information below (IEC 60634-5-534):

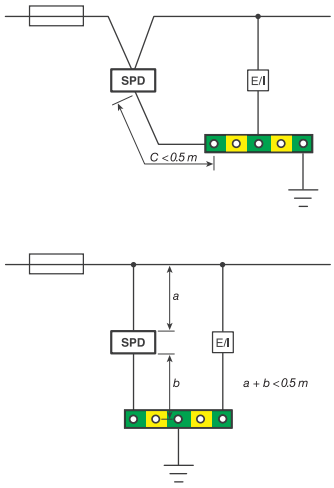

The section of the connecting wires (copper) must not be less than:
SPD Type 1: 16 mm² if it is subject to discharge a significant lightning current, 6 mm² otherwise
SPD Type 2: 6 mm²
SPD Type 3: 1.5 mm²

PROTECTING PHOTOVOLTAIC (PV) SYSTEMS AGAINST LIGHTNING

Installation characteristics

[U_{OCSTC}] PV voltage: Open circuit voltage, measured under standardized test conditions, of the PV module, panel, array, or the DC side of the photovoltaic inverter. prEN 50539-12.

[I_{SCSTC}]: Short-circuit current: Short-circuit current, measured under standardized test conditions, of the PV module, panel, array, or photovoltaic inverter. prEN 50539-12.

[U_{CPV}] SPD Maximum continuous operating voltage: Must be equal or greater than to 1.2 times U_{OCSTC} in all conditions of radiation and temperature. prEN 50539-11, prEN 50539-12.

[I_{SCPV}]: Maximum prospective short-circuit current from the power system for which the SPD, in conjunction with the disconnectors specified, is rated. EN 50539-11.

System installation

Photovoltaic systems are generally located external to a building and can be subjected to the direct or indirect effects of lightning.
Whilst the installation of photovoltaic panels on the roof does not, in itself, increase the risk of direct lightning, the only practical way to protect against the effects of a direct lightning strike would be the use of a lightning protection system (LPS).
The indirect effects of lightning can however, be mitigated by the appropriate use of Surge Protection Devices (SPD). These indirect effects occur when lightning strikes in proximity to the structure and where magnetic induction creates an overvoltage in the conductors – a danger to both people and equipment. In particular, the DC cables of a PV system would be exposed to the high conducted and radiated disturbances caused as a result of the lightning currents. In addition, overvoltages in PV systems are not only of atmospheric origin. It is also necessary to consider overvoltages due to switching on electrical networks connected to them. These overvoltages can also damage both the inverter and the PV panels, and this explains the need to protect the inverter on both DC and AC sides.

Photovoltaic system on a building without a lightning protection system (LPS)

As an example, Figure 10 represents a simplified photovoltaic system placed on a building without lightning rod. In such a system, the protection against lightning must be considered at the following points of installation:

- DC input of the inverter
- AC output of the inverter
- Low voltage supply network

At the DC input to the inverter SPDs specific for photovoltaic systems must be installed, according to the PV system voltage. At the inverter AC output, type 2 surge arresters must be installed suitable for the type of system. At the point of connection to the LV supply network, install type 2 surge arresters suitable to the type of system (TT, TN). In more complex systems, it might be necessary to introduce additional SPDs. DC side: if the distance between the inverter and PV modules exceeds 10 m, it is necessary to replicate and install the SPD as close as possible to the PV modules.

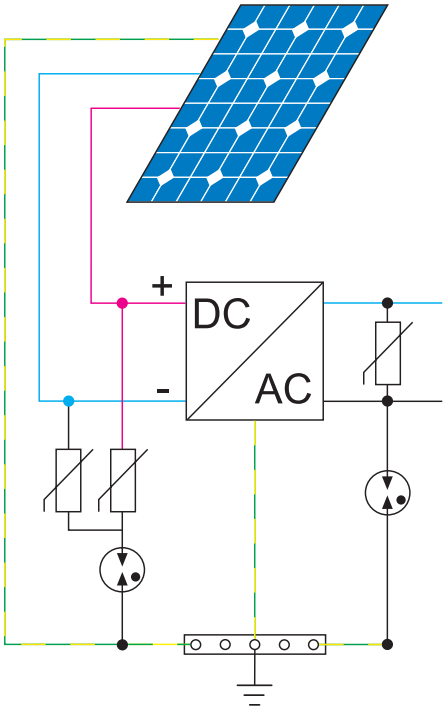

Figure 10: Example of a photovoltaic system located on a building without LPS, protected on the DC side by an SPD with U_{OCSTC} = 420 V, and on the AC side by a 7P.22, specific for TT systems.

Photovoltaic system on a building with a lightning protection system (LPS)

Where an LPS exists it is good practice to install the photovoltaic panels in the area protected by the lightning rod.
In addition it is necessary to realize a good equipotential bonding system, which must be positioned as close as possible to the entry point of LV supply into the structure. The LPS, the SPD and all metal parts have to be connected to this equipotential system.
SPD protection on the DC depends on the safety distance (referred in EN 50539-12:12-2012).
Note that under EN 62305 installation of a Type 1 SPD is mandatory at the point of delivery of the AC electricity supply, whether or not the building has LPS (with or without solar panels).

SPD fuse protection

Conforming to prEN 50539-11:2010, Finder SPDs are equipped with a thermal disconnector able to safely disconnect a worn or damaged varistor up to a value of short-circuit current equal to the short-circuit current withstand value (I_{scpv}), as specified in the technical data.
Ensure that the PV short circuit current $I_{sc} < I_{scpv}$.
Ensure that the PV short circuit current $I_{sc} < I_{scpv}$ or increase the number of the strings.

Insulation distances and wiring

To conform with prEN 50539-11 insulation distances and minimum wiring cross section must be respected.

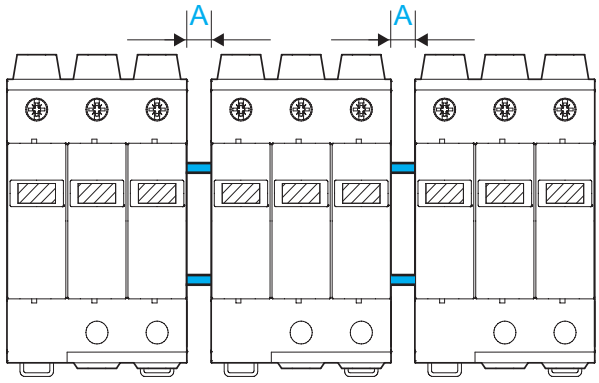

Insulation distances		Minimum Wiring [mm²]	
$U_{CPV}(SPD) \geq 1.2 \times U_{OCSTC}$	A [mm]	+/– Poles	Ground
750 V DC	5	4	6
1000 V DC	5	4	6
1500 V DC	10	4	6