Bourdon Tube Pressure Gauges, Safety Pattern

Modelcode type: 23X.30

Item number: 8603316

Bourdon Tube Pressure Gauges, Safety Pattern	
Design	EN 837-1
Nominal size	100 mm
Accuracy class	class 1.0
Scale range	0...6 bar
Unit of outer Scale	bar
Process connection	1/2 NPT
Connector location	lower mount
Materials	
Movement	
Dial	Aluminum, white
Pointer	aluminium, black
Case material	Stainless steel 1.4301
Window	laminated safety glass
Bezel ring	cam ring (bayonet type), stainless steel
Case filling fluid	glycerine
Operating conditions	
Permissible ambient temperature	-20 … +60 °C
Permissible medium temperature	+ 100 °C
Ingress protection	IP 65
Options	
Labelcode	
Label	WIKA standard without / with Tag-number
language of the label	German

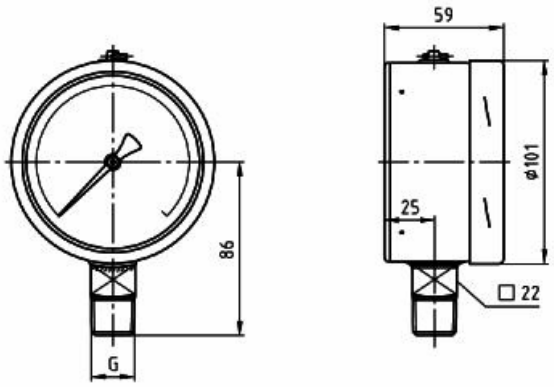

© Copyright by WIKA: Reproduction of this document is prohibited