Brand of NTN corporation

Technical data

UKT216H

Bearing units



Grey cast housing, radial insert ball bearing with adapter sleeve,seal with slinger

KIT CONTENT

UK216G2H, T216

VISUAL (S)

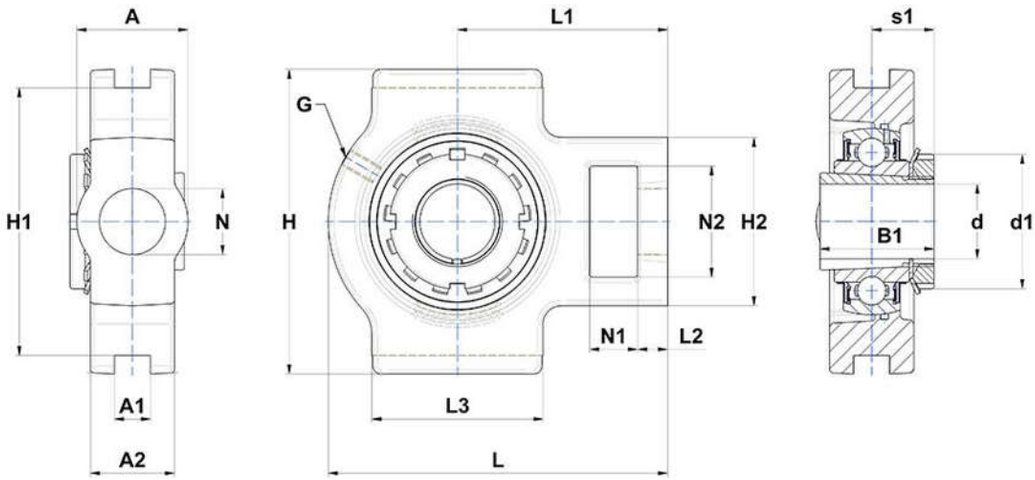

PRODUCT DEFINITION

Brand	SNR
A - Housing width	70 mm
A1 - Width of location slot	26 mm
A2	51 mm
B1 - Overall width Inner Ring	78 mm
d - Shaft diameter	70 mm

PRODUCT DEFINITION	
d1 - Outer dia of eccent. Lock. collar / nut of adapter sleeve	105 mm
G - Grease fitting	M10x1
H - Housing length, width or diameter	184 mm
H1 - Distance between location slots	165 mm
H2 - Housing height / width	111 mm
L - Housing length	235 mm
L1 - Distance attachment end face to bearing centerline	140 mm
L2 - Thickness of attachment end	21 mm
L3 - Length of guidance slot/face	121 mm
N - Mounting hole dimension	41 mm
N1 - Length of attachment slot	32 mm
N2 - Height of attachment slot	70 mm
s1 - Distance nut to middle of bearing raceway	39 mm

PRODUCT PERFORMANCE	
C - Dynamic load rating	72500000 mN
C0 - Static load rating	54200000 mN
Operating temperature min.	253,15 °K
Operating temperature max.	373,15 °K

OTHER FEATURES	
Mass	8,61 kg
Adapter sleeve designation	H2316