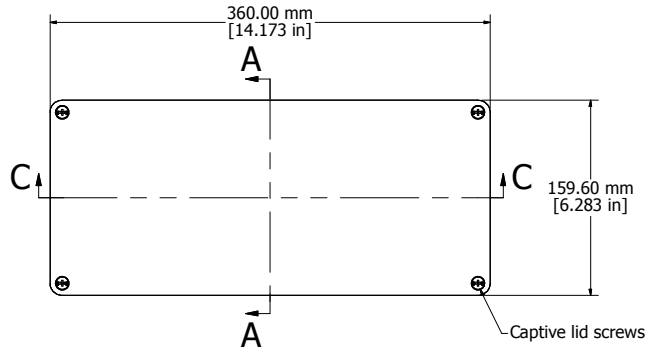

ASSEMBLY

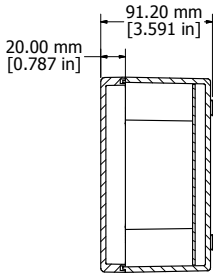

SECTION A-A

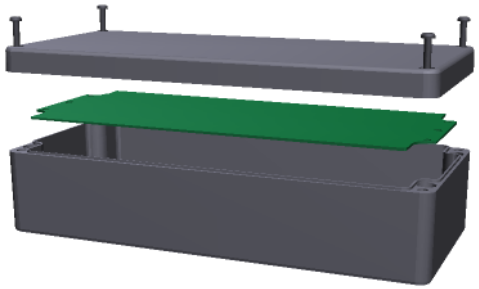

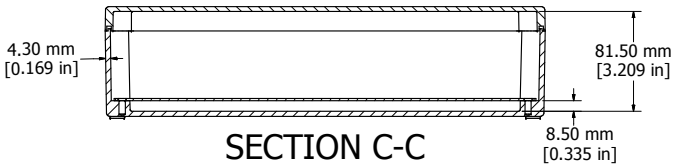

SECTION C-C

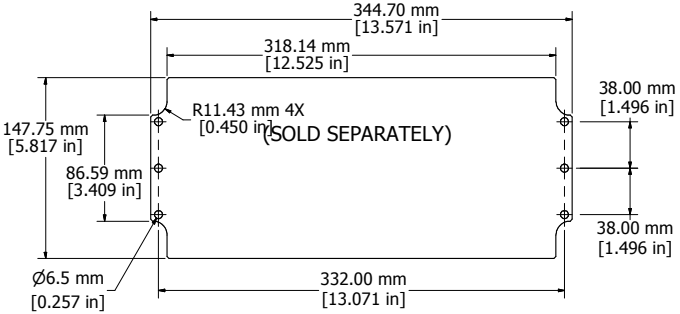

1590Z166PL

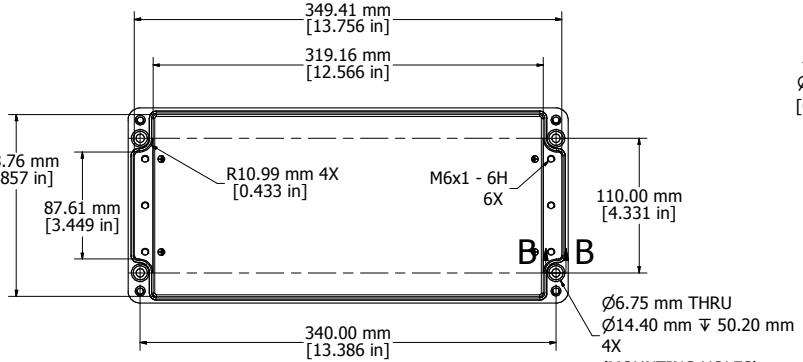

BOX - INSIDE

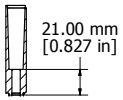

SECTION B-B

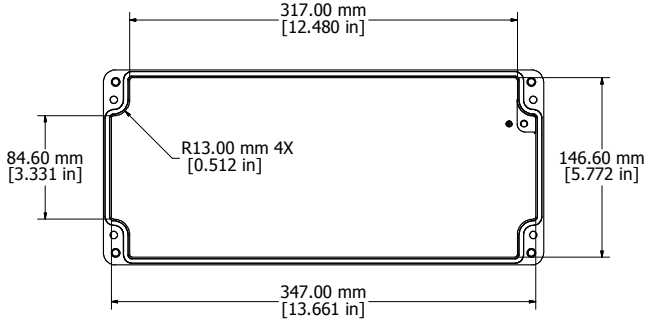

LID - INSIDE

c UL us LISTED
File #E65324
NEMA 4, 4X

Enclosures can be Factory Modified (Milling, Drilling, Printing etc.)
Contact Factory mjm@hammondmfg.com for quotes
Solid models of this enclosure available in STEP or IGES.

NOTES
Purchased assembly includes enclosure, M6x35 lid screws and M6x10 ground screws.
Gasket - Preformed Silicone Rubber
Cover screws should be torqued to 15-17 lbf.in (150-170 cN.m)

1590Z166	
PART NUMBERS	
Basic Enclosure	1590Z166
Black Enclosure	1590Z166BK
Grey Enclosure - RAL7001 Gloss	1590Z166GY
ACCESSORIES	
Inner Panel	1590Z166PL

HAMMOND MANUFACTURING™

1590Z166

www.hammondmfg.com