Brand of NTN corporation

Technical data

UKF215H

Bearing units



Grey cast housing, radial insert ball bearing with adapter sleeve,seal with slinger

KIT CONTENT

UK215G2H, F215

VISUAL (S)

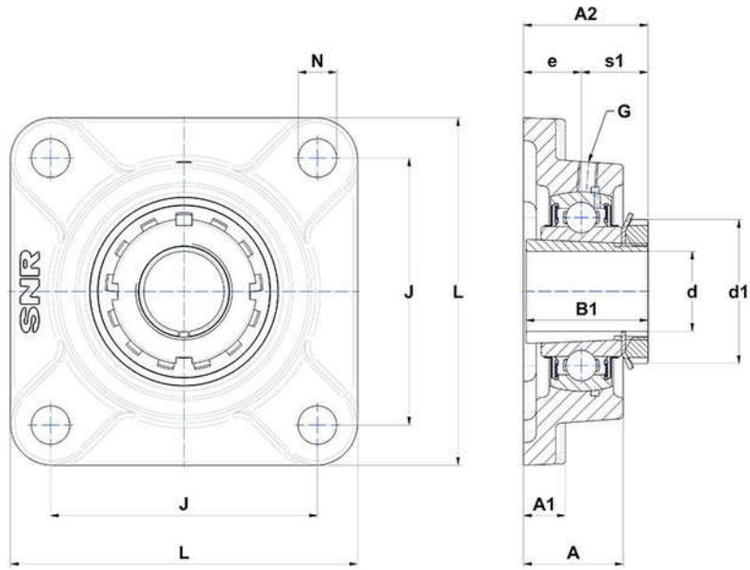

PRODUCT DEFINITION

Brand	SNR
A - Housing height	56 mm
A1 - Housing foot height / flange height	22 mm
A2 - Total height from mounting surface	69,5 mm
B - Width of Inner Ring	41 mm
B1 - Overall width Inner Ring	73 mm

PRODUCT DEFINITION	
d - Shaft diameter	65 mm
d1 - Outer dia of eccent. Lock. collar / nut of adapter sleeve	98 mm
e - Distance mounting surface to bearing center	34 mm
G - Grease fitting	M10x1
J - Mounting holes distance	159 mm
L - Housing width / diameter	200 mm
N - Mounting hole dimension	19 mm
s1 - Distance nut to middle of bearing raceway	35,5 mm

PRODUCT PERFORMANCE	
C - Dynamic load rating	66000000 mN
C0 - Static load rating	49500000 mN
Operating temperature min.	253,15 °K
Operating temperature max.	373,15 °K

OTHER FEATURES	
Mass	6,13 kg
Adapter sleeve designation	H2315