LBC, D-series

Next generation of SKF linear ball bearings and units

- Increased level of performance
- Improved lifetime
- Improved reliability and robustness
- Easier to mount

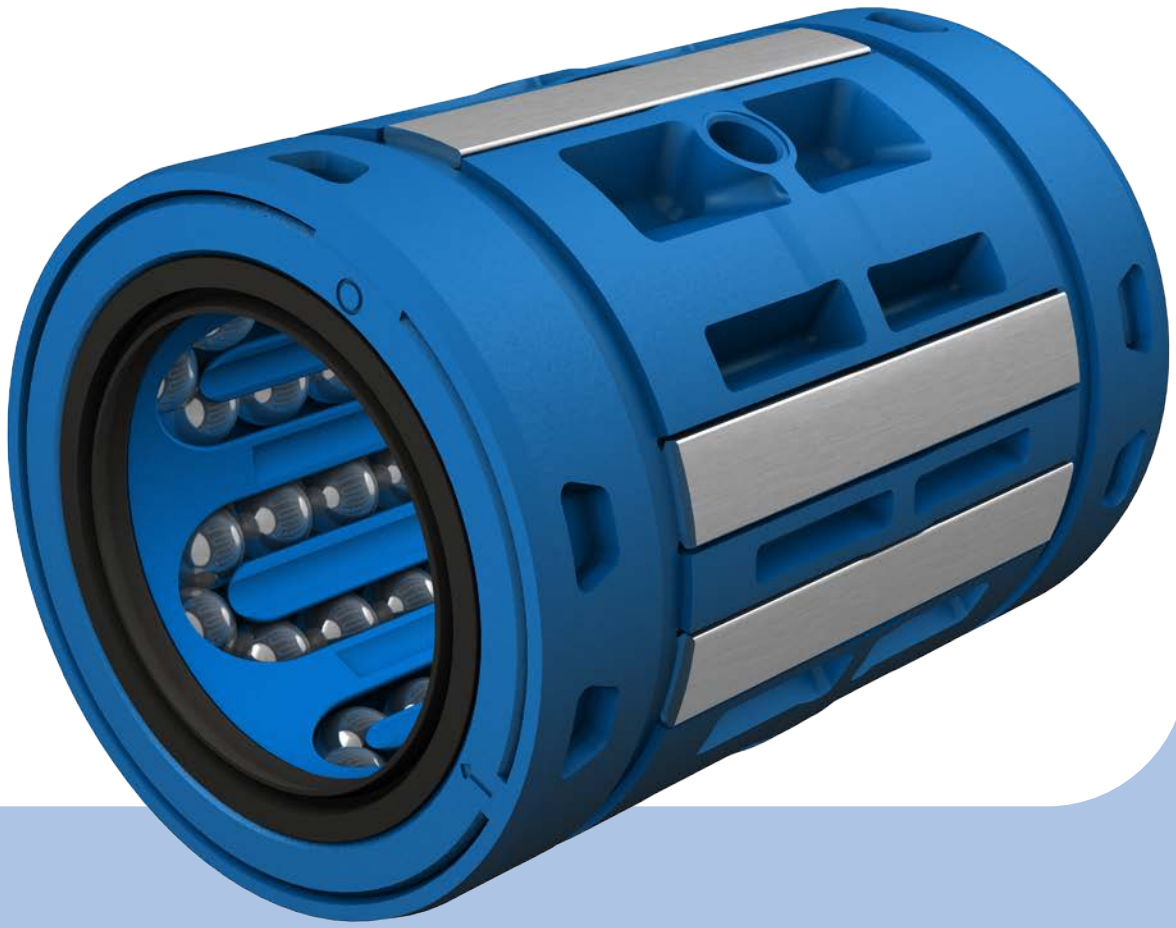

Content

SKF – the knowledge engineering company **4**

LBC, D-series – next generation of linear ball bearings and units **6**

Applications **7**
Features and benefits 8

Technical and calculation data **10**
Permissible operating conditions 10
Friction 10
Calculation bases and factors of influence 10
Operating conditions 12
Impact of stroke length, factor f_s 13
Number of loaded bearings per shaft, factor f_i 13
Influence of load direction, factors f_l and f_{l0} 13
Mounting and maintenance 13
Product overview 14

Product tables **15**
Linear ball bearings ISO series 3 15
Linear ball bearings – LBCR .. D 15
Linear ball bearings – LBCD .. D 15
Axial and rotational fixation – LBC, D-series 16
Grease fittings – for LBC, D-series 17
Linear bearing units, ISO series 3 18
Linear bearing units – LUCD .. D 19
Linear bearing units – LUCE .. D 20
Linear bearing units – LUND .. D 21
Linear bearing units – LUNE .. D 22
Flanged linear bearing units – LVCR .. D 23
Tandem linear bearing units – LTCD .. D 24
Quadro linear bearing units – LQCD .. D 25

Specification sheet – Linear Ball bearing **27**

SKF – the knowledge engineering company





From one simple but inspired solution to a misalignment problem in a textile mill in Sweden, and fifteen employees in 1907, SKF has grown to become a global industrial knowledge leader. Over the years we have built on our expertise in bearings, extending it to seals, mechatronics, services and lubrication systems. Our knowledge network includes 46 000 employees, 15 000 distributor partners, offices in more than 130 countries, and a growing number of SKF Solution Factory sites around the world.

Research and development

We have hands-on experience in over forty industries, based on our employees' knowledge of real life conditions. In addition our world-leading experts and university partners who pioneer advanced theoretical research and development in areas including tribology, condition monitoring, asset management and bearing life theory. Our ongoing commitment to research and development helps us keep our customers at the forefront of their industries.

Meeting the toughest challenges

Our network of knowledge and experience along with our understanding of how our core technologies can be combined helps us create innovative solutions that meet the toughest of challenges. We work closely with our customers throughout the asset life cycle, helping them to profitably and responsibly grow their businesses.

Working for a sustainable future

Since 2005, SKF has worked to reduce the negative environmental impact from our own operations and those of our suppliers. Our continuing technology development introduced the SKF BeyondZero portfolio of products and services which improve efficiency and reduce energy losses, as well as enable new technologies harnessing wind, solar and ocean power. This combined approach helps reduce the environmental impact both in our own operations and in our customers'.

SKF Solution Factory makes SKF knowledge and manufacturing expertise available locally, to provide unique solutions and services to our customers.



Working with SKF IT and logistics systems and application experts, SKF Authorized Distributors deliver a valuable mix of product and application knowledge to customers worldwide.



Our knowledge – your success

SKF Life Cycle Management is how we combine our technology platforms and advanced services, and apply them at each stage of the asset life cycle, to help our customers to be more successful, sustainable and profitable.

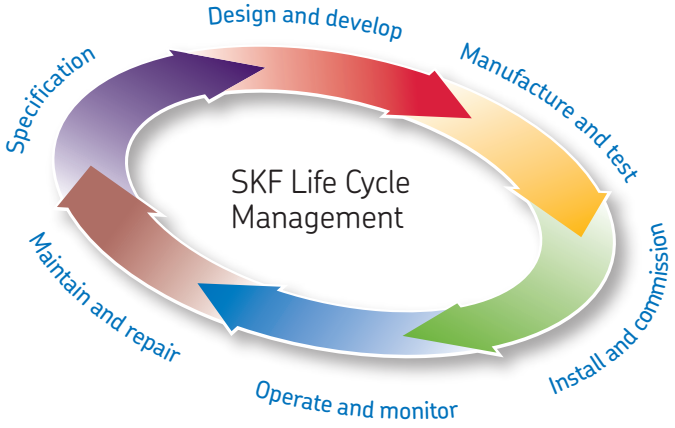

Working closely with you

Our objective is to help our customers improve productivity, minimize maintenance, achieve higher energy and resource efficiency, and optimize designs for long service life and reliability.

Innovative solutions

Whether the application is linear or rotary or a combination of the two, SKF engineers can work with you at each stage of the asset life cycle to improve machine performance by looking at the entire application. This approach doesn't just focus on individual components like bearings or seals. It looks at the whole application to see how each component interacts with the next.

Design optimization and verification

SKF can work with you to optimize current or new designs with proprietary 3-D modeling software that can also be used as a virtual test rig to confirm the integrity of the design.



Bearings
SKF is the world leader in the design, development and manufacture of high performance rolling bearings, plain bearings, bearing units and housings.



Machinery maintenance
Condition monitoring technologies and maintenance services from SKF can help minimize unplanned downtime, improve operational efficiency and reduce maintenance costs.



Sealing solutions
SKF offers standard seals and custom engineered sealing solutions to increase uptime, improve machine reliability, reduce friction and power losses, and extend lubricant life.



Mechatronics
SKF fly-by-wire systems for aircraft and drive-by-wire systems for off-road, agricultural and forklift applications replace heavy, grease or oil consuming mechanical and hydraulic systems.



Lubrication solutions
From specialized lubricants to state-of-the-art lubrication systems and lubrication management services, lubrication solutions from SKF can help to reduce lubrication related downtime and lubricant consumption.



Actuation and motion control
With a wide assortment of products – from actuators and ball screws to profile rail guides – SKF can work with you to solve your most pressing linear system challenges.

LBC, D-series

Next generation of SKF linear ball bearings and units

LBC, D-series is the latest range of SKF linear ball bearings, improving on the current SKF range of linear ball bearings already recognized as best in class throughout industry. LBC, D-series linear ball bearings consist of a cage and raceway segments to support ball sets and seals. The raceways with an exceptionally long track and a precision machined profile accommodate heavy loads. LBC, D-series linear ball bearings are available for shaft diameters 12 to 40 mm, with the choice of double lip seals. Bearings with stainless steel balls and raceways are available for contaminated environments. They can be used in combination with SKF stainless steel shafts for a corrosion resistant guidance system.

If required, a self-aligning version of the LBC, D-series is available. This LBCD .. D bearing accommodates tilting of the whole bearing through an angle up to ±30 minutes of arc. The tilting feature compensates for misalignment which may be caused by significant bending of an unsupported shaft or by misalignment due to manufacturing and fitting tolerances of the adjacent construction. The cage and seals have been optimized to accommodate the self-aligning capability so that the bearing and especially the shields or seals remain concentric with the shaft.

Pos.	Component	Material
1	Cage	PA
2	Recirculation cap	PA
3	Double lip seal	PU
4	Balls	Bearing steel
5	Raceways	Steel
6	Lubrication port	–

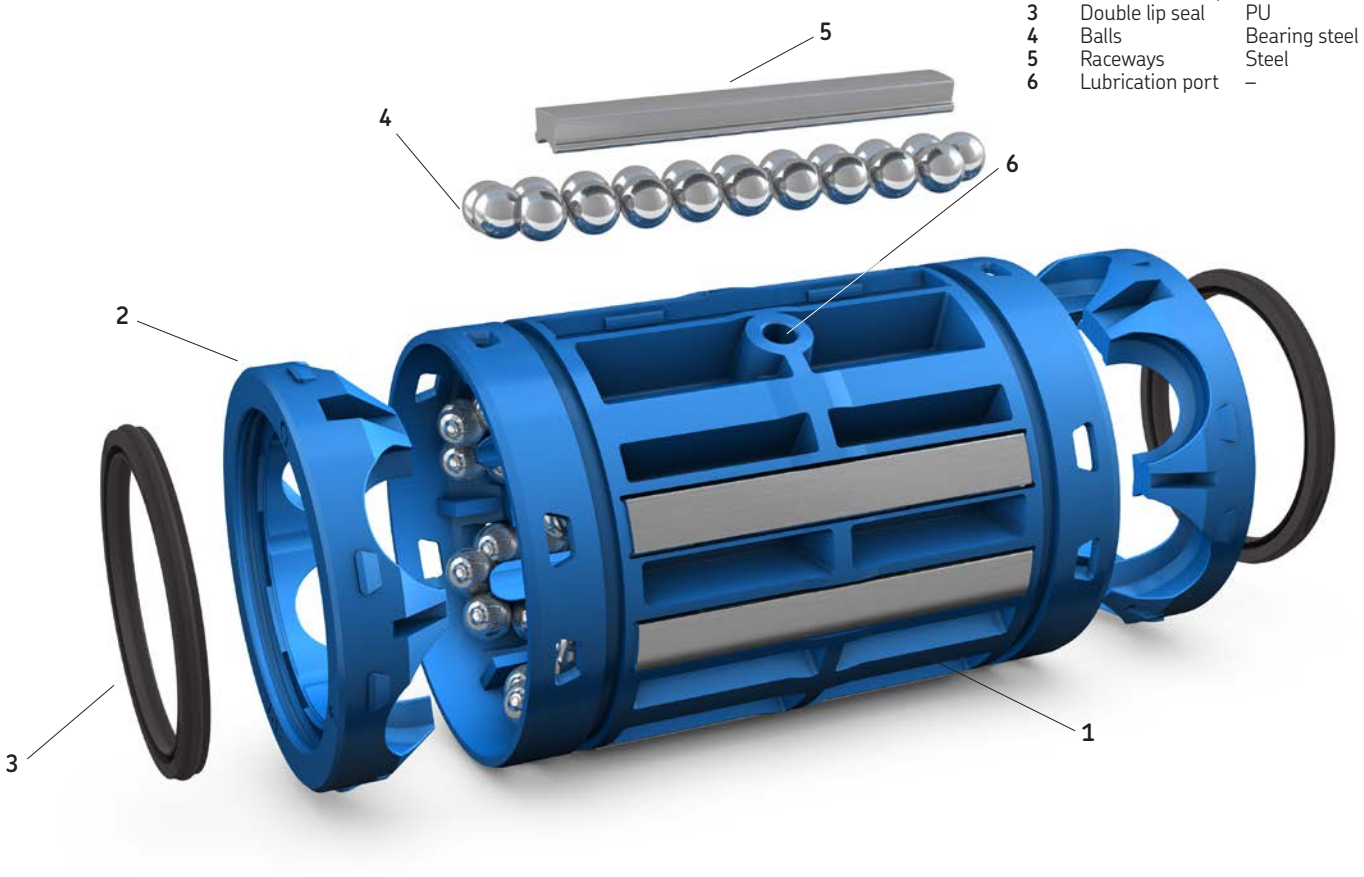

Applications

Automation machinery

Automation processes are often based on linear ball bearing slides. These enable the insertion, exact positioning and removal of work pieces.

Customer benefits

- High running accuracy
- Can be used in harsh / polluted environment
- High speed
- Efficient sealing provides long service life

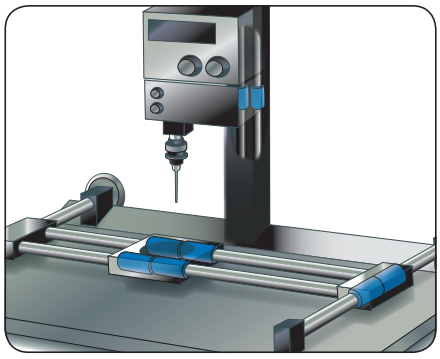

Pick and place machines

Machines performing pick and place tasks, robots in laboratories or automated handling machines, can be equipped with linear ball bearings.

Customer benefits

- High running accuracy
- Can be used in clean environment
- High speed

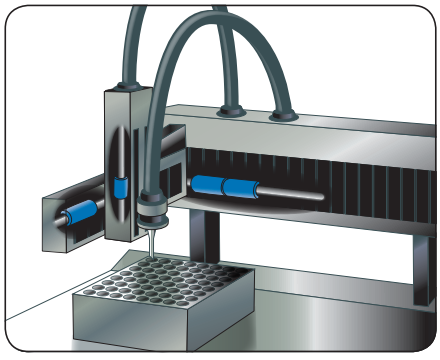

Filling machines

The fillers move up and down to fill bottles that slide down the production line. The vertical movement is supported by linear ball bearings.

Customer benefits

- Special grease enables usage with food (optional)
- Pre-lubrication and double lip seals provide long lifetime
- Long service time

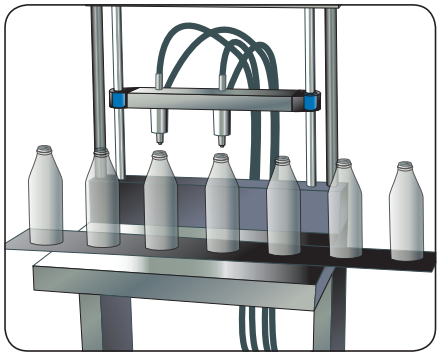

Platform screen doors

The door systems contain linear ball bearings, which guide the parallel movement of the door to the side of the vehicle.

Customer benefits

- Low maintenance and long service intervals
- Smooth running performance enables easy door movement
- Bearings are sealed from contamination by double-lip seals

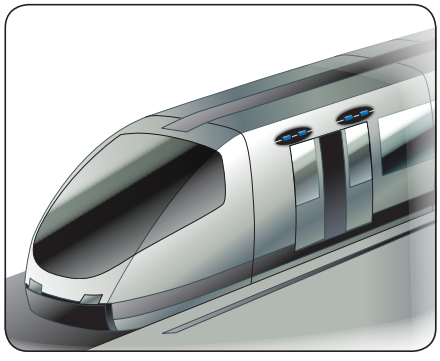

It is strongly recommended that the application of bearings proposed by SKF are tested in operational conditions as close as possible to real ones. Please contact SKF in case of any further questions.

Features and benefits

Improved load ratings and lifetime
Depending on the specific bearing size, the LBC, D-series linear ball bearings can deliver up to 15% higher dynamic load carrying capacity and up to 50% longer bearing lifetime than previous LBC designs. Optimized ball tracks and larger rolling elements enable the performance increases and consequently, greater reliability and productivity for the application. Higher load carrying capacity also gives product designers and manufacturers the flexibility to downsize designs or to increase loading.

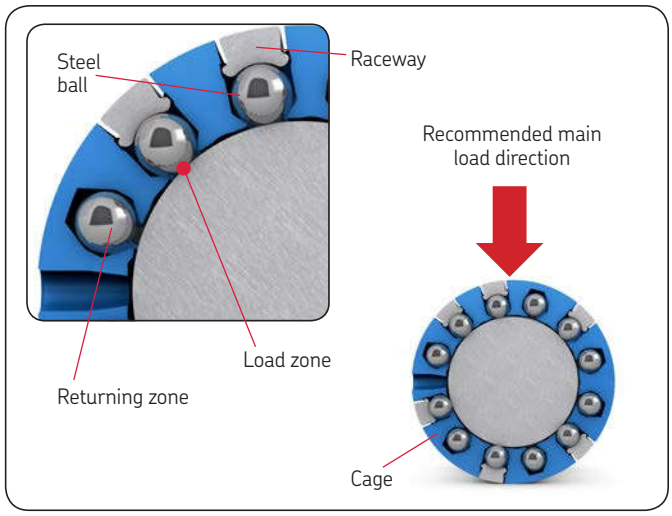

Full ISO interchangeability
LBC, D-series linear ball bearings are manufactured according to ISO 10285 dimensions and tolerances, making them fully interchangeable with previous LBC or ISO Series 3 bearings. For product designers and manufacturers, the new LBC, D-series bearings offer a flexible, drop-in replacement option for existing equipment designs.

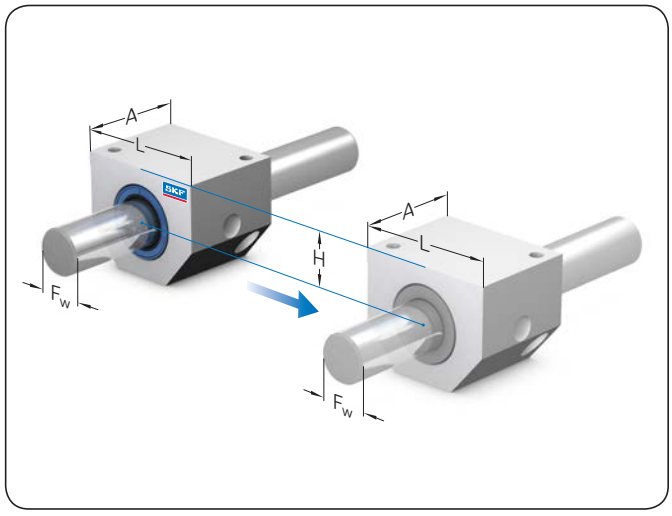

Self-aligning capability
The LBC, D-series linear ball bearings include the self-aligning LBCD .. D variant. Self-aligning LBCD .. D linear ball bearings can accommodate tilting of the whole bearing through an angle of ±30 minutes of arc. This tilting feature compensates for misalignments caused by fitting or manufacturing tolerances of the adjacent construction, or by significant bending of an unsupported shaft. The LBCD .. D bearing cage, seals and shields have been optimized to accommodate the self-aligning feature so that the bearing, shields and seals remain concentric with the shaft. LBCD .. D bearings ensure good running characteristics despite misalignment, ultimately resulting in increased bearing lifetime and reduced maintenance demands.

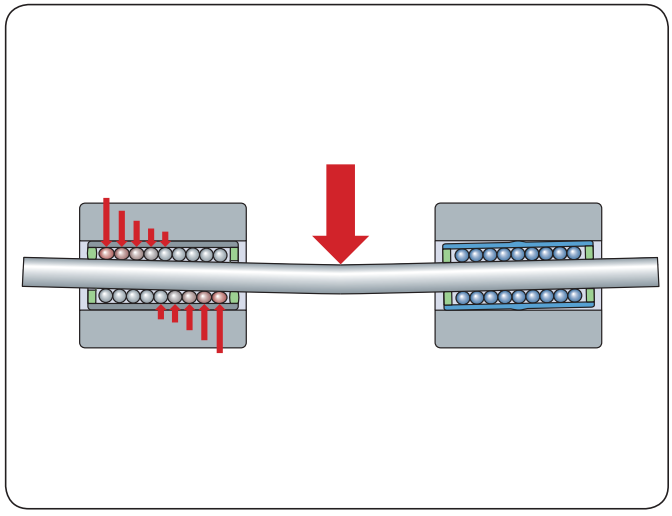

Optimized cage design
LBC, D-series bearings have an optimized cage design with few components than with previous designs; a reduction that increases the reliability of the bearing and the application. The new cage design features larger ball sizes, ball tracks, grease reservoir and recirculation channels. This combination of features helps ensure smooth operation with less friction and noise, making LBC, D-series bearings a good option even for sensitive applications such as the medical industry.

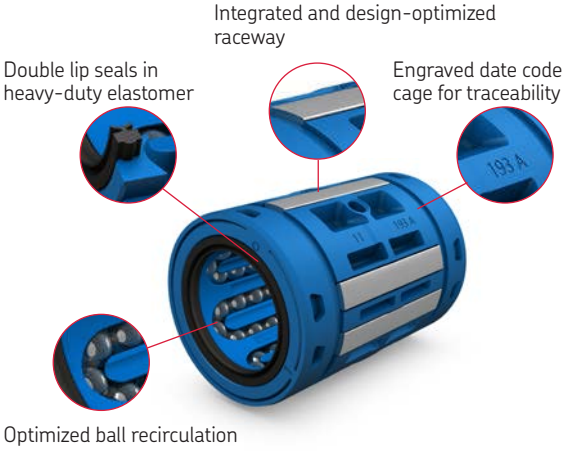

Factory pre-lubrication
All LBC, D-series bearings and units are factory-lubricated with the optimum amount of SKF LGEP2 grease. Pre-lubrication means LBC, D-series bearings arrive "shaft ready" to help reduce assembly times and mounting mistakes, while no lubrication requirements after mounting helps to cut cost. Food compatible grease and other greases are available on request.

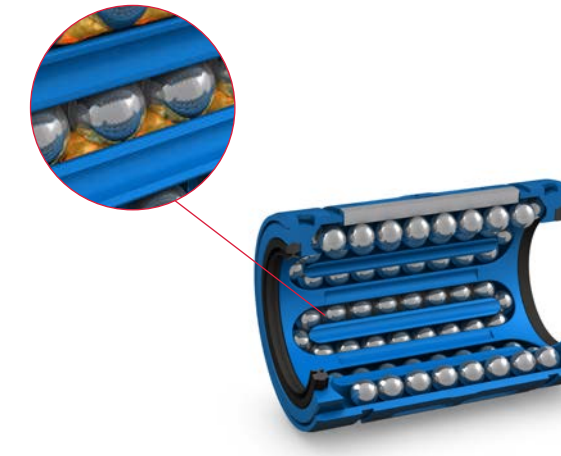

Easier mounting
To help make bearing mounting procedures more ergonomic, LBC, D-series bearings feature two indicator marks on the front side: one for main load direction, one for lubrication port position. The indicators enable fast bearing orientation in the housing, reducing the risk of errors as well as bearing mounting times.

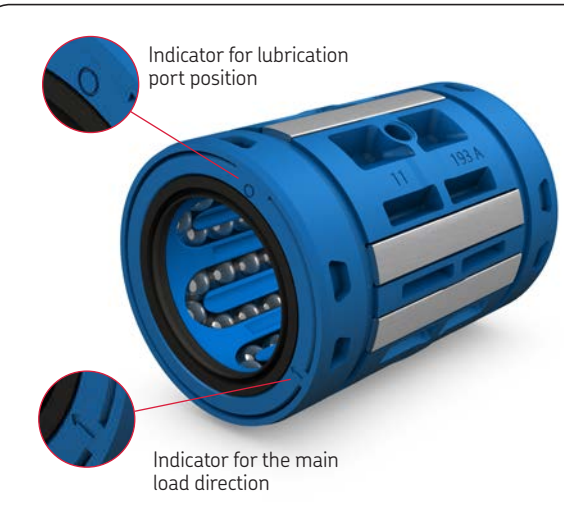

Technical and calculation data

Permissible operating conditions

The correct functioning of a linear ball bearing guidance system can only be maintained if the principal operating limits are not exceeded. The validity of the operating life calculations depends on the observance of the operating conditions described below.

Dynamic values

LBC, D-series linear ball bearings can reach a maximum speed of v_{max} = 5 m/s.

The maximum permissible acceleration is a_{max} = 100 m/s^2.

Permissible operating temperature

The permissible operating temperature range for continuous operation of SKF linear ball bearings is from –20 to +80 °C and is determined by the cage and seal materials. Lower and higher temperatures can be tolerated for brief periods.

Table 1

Sliding and starting friction values for lubricated LBCR and LBCD, D-series linear ball bearings with two seals.

Bearing size	Friction forces	
	Running	Starting
–	N	N
12	2,5	5
16	3	7
20	4	8
25	5	11
30	7	14
40	8	19

Friction

Friction in a linear guidance system is affected, apart from the loading, by a number of other factors, notably the type and size of the bearing, the operating speed, as well as the quality and the quantity of lubricant used (→ **table 1**).

Calculation bases and factors of influence

Static safety factor

The static safety factor is expressed as the relationship between the static load rating and the maximum static bearing load.

The static safety factor indicates the level of safety against permanent plastic deformation of the steel balls, raceways and guide shaft and is calculated according to formulae **1** and **2**.

$$[1]\ P_0 = \frac{F_{max}}{f_m\, f_{l0}\, f_{h0}}$$

$$[2]\ s_0 = \frac{C_0}{P_0}$$

where

C_0 = basic static load rating [N]
f_m = factor for misalignment[1)]
f_{l0} = factor for direction of load
f_{h0} = factor for surface hardness of shaft[1)]
F_{max} = maximum external static load [N]
P_0 = maximum static load [N]
s_0 = static safety factor

Depending on the operating conditions and requirements on the quietness on running, a static safety factor s_0 according to **table 2** is recommended based on experience.

Table 2

Recommended static safety (minimum values)

Operating conditions	s_0	
	from	up to
Smooth vibration free	1	2
Normal running	2	4
Shock loads or vibration	3	5

Table 3

Raceway length l_t of the different linear ball bearing sizes

Type	l_t
LBC. 12 D	18,4
LBC. 16 D	21,2
LBC. 20 D	27,6
LBC. 25 D	37,2
LBC. 30 D	45,4
LBC. 40 D	50,8

Table 4

Factor f_s depending on the ratio l_s/l_t

l_s/l_t	f_s
1,0	1,00
0,9	0,91
0,8	0,82
0,7	0,73
0,6	0,63
0,5	0,54
0,4	0,44
0,3	0,34
0,2	0,23
0,1	0,13

Modified basic rating life

If the load situation is known and the factors have been determined, then the equivalent dynamic load and modified basic rating life can be calculated according to the following formulae.

$$[3]\ P = \frac{F}{f_m\, f_l\, f_h\, f_i}$$

$$[4]\ L_{ns} = 100\, c_1\, c_2\, f_s \left(\frac{C}{P}\right)^3$$

where

L_{ns} = modified basic rating life [km]
c_1 = factor for reliability
c_2 = factor for operating conditions
f_s = factor for stroke length
f_m = factor for misalignment[1)]
f_l = factor for direction of load
f_h = factor for surface hardness of shaft[1)]
f_i = factor for the number of loaded bearings per shaft
C = dynamic load rating [N]
F = external bearing load [N]
P = equivalent dynamic load

Requisite reliability

Factor c_1 is used for lifetime calculations where a reliability higher than 90% is needed. The corresponding values can be found in (→ **table 5**).

Table 5

Factor c_1 for reliability

Reliability %	L_{ns}	c_1
90	L_{10s}	1
95	L_{5s}	0,62
96	L_{4s}	0,53
97	L_{3s}	0,44
98	L_{2s}	0,33
99	L_{1s}	0,21

1) These factors, including an explanation as well as detailed calculation examples, can be found in the SKF technical handbook, publication 6402.

Operating conditions

The lubrication effectiveness is strongly dependent on the degree of separation between the steel balls and raceway surfaces in the contact zones. A specific minimum viscosity is required for the formation of an effectively separating lubricating film at operating temperature, taking into account the kinematic conditions. Assuming a normal level of cleanliness of the guide shaft as well as effective sealing, factor c_2 depends on the viscosity ratio κ exclusively. κ designates the ratio between the actual kinematic viscosity and the requisite minimum viscosity (→ **formula 5**)

$$[5]\ \kappa = \frac{\nu}{\nu_1}$$

where

κ = viscosity ratio

ν = actual kinematic viscosity [mm²/s]

ν_1 = requisite minimum viscosity [mm²/s]

The requisite minimum viscosity ν_1 for LBCR ... D linear bearings depends on the mean speed (→ **diagram 1**)

The value for ν_1 can be related to the actual viscosity ν according to formula [**5**] in order to obtain κ. Now c_2 can be taken from the adjacent diagram (→ **diagram 2**). If the viscosity ratio κ is less than 1, a lubricant with EP additives is recommended. If lubricants with EP additives are used, the higher value for c_2 can be used for calculation.

Diagram 2

Determining factor c_2 for operating conditions

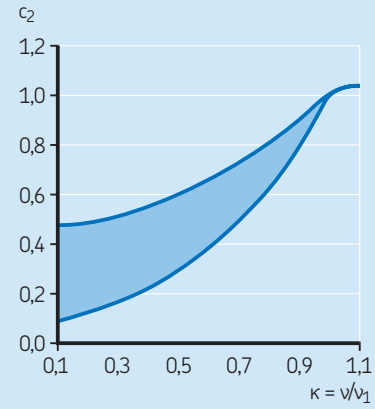

Diagram 1

Requisite kinematic viscosity ν_1

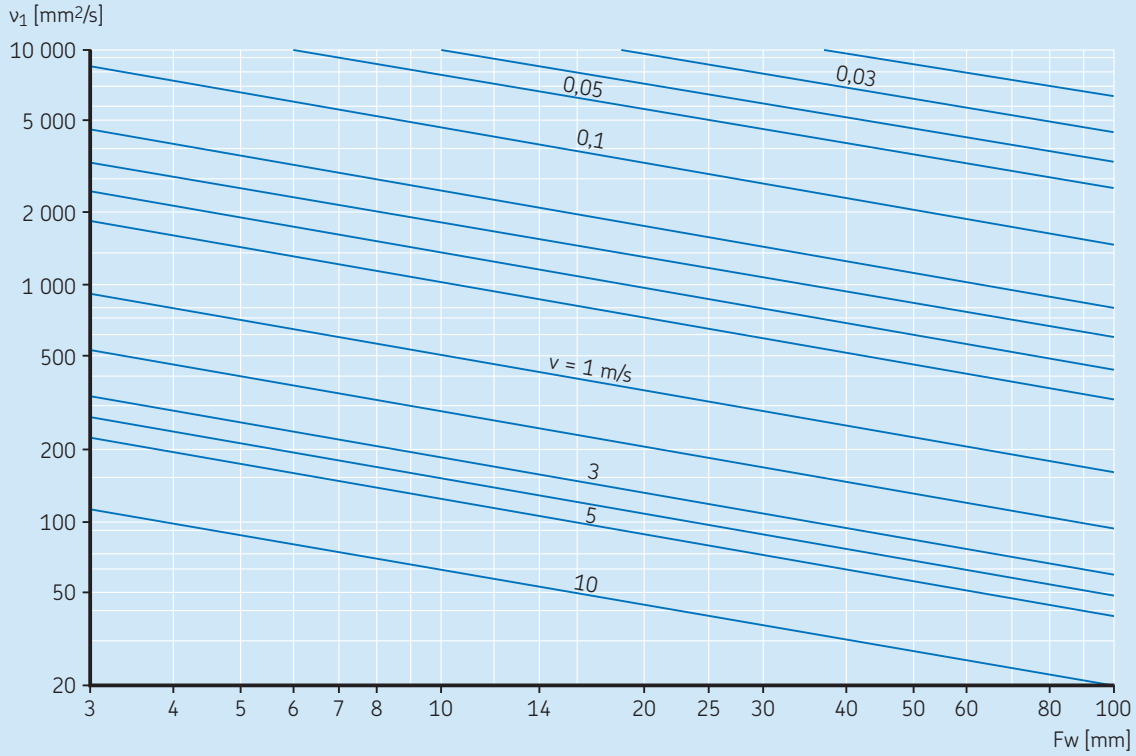

Impact of stroke length, factor f_s

Strokes shorter than the raceway length of the linear ball bearing (→ **table 3**, **page 10**) have a negative influence on the achievable life of a guidance system. Based on the ratio of the single stroke length l_s relative to raceway length l_t, factor f_s is determined according to **table 4**, **page 10**.

Number of loaded bearings per shaft, factor f_i

Most linear ball bearing configurations feature two (or more) bearings mounted on one shaft. The load distribution on these various bearings is strongly influenced by the mounting accuracy, the manufacturing quality of the adjacent components, and in particular, the distance between the bearings. Factor f_i takes these influences on bearing loading into account based on the number of bearings per shaft and the distance between them (→ **table 6**).

Note

This factor has no influence when the bearings are mounted in the same accurate drilling as used in the original housings from SKF.

Influence of load direction, factors f_l and f_{l0}

Linear ball bearings and units of the LBCR and LBCD, D-series design must be mounted so that the line of action of the load falls within the main load direction which is marked on the end of the cage, see C_{max} and $C_{0\ max}$ values in the data table (→ *Easier mounting*, **page 9**).

If the direction of the load deviates from the optimum, the load ratings must be corrected using the factors f_l and f_{l0} (→ **diagram 3**).

In case the load direction is unknown the C min and C_0 min values shown in the data table do apply.

Mounting and maintenance

Mounting instructions as well as methods for the required axial fixation for the LBC, D-series bearings can be found in the SKF technical handbook, publication 6402. This publication also includes maintenance instructions.

Table 6

Factor f_l for number of loaded bearings per shaft

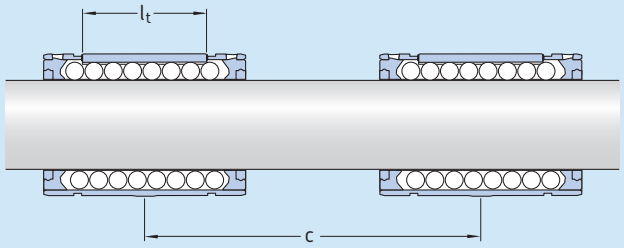

Number of bearings	If c ≥ 1,5 l_t f_i	If c < 1,5 l_t f_i
1	1	1
2	1	0,81
3	1	0,72

Diagram 3

Factors f_l and f_{l0} related to the direction of load for LBCR and LBCD linear ball bearings

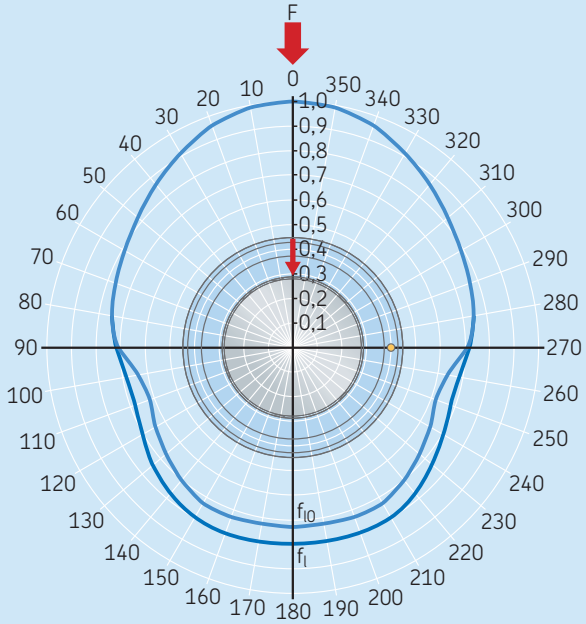

Product overview

– Standard range

Product	Type	Size mm	Max load ratings [N] dynamic /static	Comments	ISO-series	Page no.
Linear ball bearings						
	LBCR .. D	12 to 40	11 200/8 300		3	13
	LBCD .. D	12 to 40	9 650/5 700	Self-aligning*)	3	13
Linear bearing units						
	LUCD .. D	12 to 40	9 650/5 700	LBCD .. D bearing Self-aligning*)	3	17
	LUCE .. D	12 to 40	9 650/5 700	LBCD .. D bearing Self-aligning*) Clearance adjustable	3	18
	LUND .. D	12 to 40	9 650/5 700	LBCD .. D bearing Self-aligning*)	3	19
	LUNE .. D	12 to 40	9 650/5 700	LBCD .. D bearing Self-aligning*) Clearance adjustable	3	20
	LVCR .. D	12 to 40	11 200/8 300	LBCR .. D bearing	3	21
	LTCD .. D	12 to 40	15 600/11 400	Tandem LBCD .. D bearing Self-aligning*)	3	22
	LQCD .. D	12 to 40	25 500/22 800	Quadro LBCD .. D bearing Self-aligning*)	3	23

* Automatic compensation of shaft misalignments of up to max. ±30 angular minutes.

Linear ball bearings – LBCR .. D

Closed design

F_w **12 – 40** mm

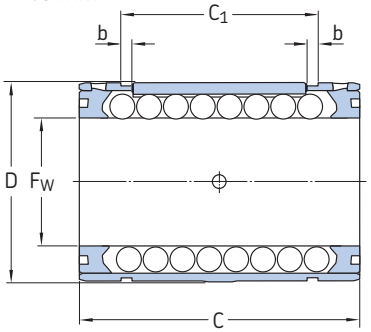

Without seals

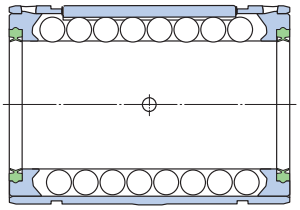

With 2 double lip seals

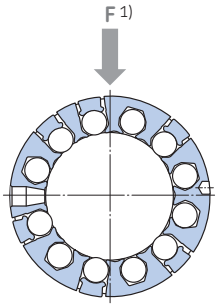

Dimensions					No. of ball rows	Basic load ratings dynamic		static		Mass	Designations Linear ball bearing without seals	with 2 double lip seals
F_w	D	C	C_1	b		C min	max	C_0 min	max			
mm						N				kg	–	
12	22	32	22,6	1,3	5	930	1 370	695	1 120	0,02	**LBCR 12 D**	**LBCR 12 D-2LS**
16	26	36	24,6	1,3	5	1 080	1 600	800	1 290	0,026	**LBCR 16 D**	**LBCR 16 D-2LS**
20	32	45	31,2	1,6	6	2 200	3 250	1 630	2 650	0,056	**LBCR 20 D**	**LBCR 20 D-2LS**
25	40	58	43,7	1,85	6	3 100	4 550	2 360	3 800	0,108	**LBCR 25 D**	**LBCR 25 D-2LS**
30	47	68	51,7	1,85	6	4 800	7 100	3 550	5 700	0,122	**LBCR 30 D**	**LBCR 30 D-2LS**
40	62	80	60,3	2,15	6	7 650	11 200	5 100	8 300	0,205	**LBCR 40 D**	**LBCR 40 D-2LS**

1) Direction for max. load ratings
Upon request, these bearings are available in stainless steel version, identified by a HV6 suffix in the designation, e.g. LBCR 20 D-2LS/HV6
Linear ball bearings are available with double lip seal on one side only (seal located on the right side of the bearing - marked with the SKF logo on the cage). Designation example: LBCR 20 D-LS

Linear ball bearings – LBCD .. D

Self-aligning closed design

F_w **12 – 40** mm

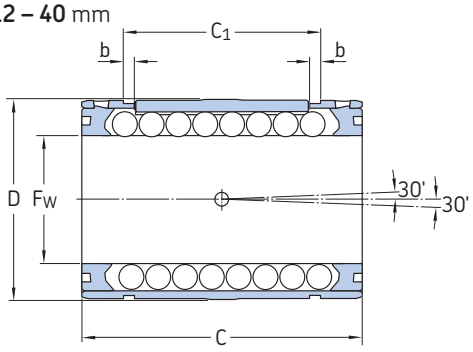

Without seals

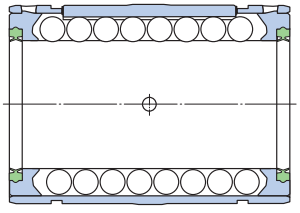

With 2 double lip seals

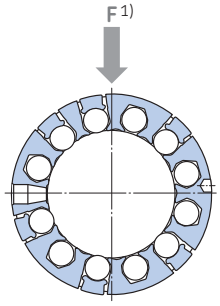

Dimensions					No. of ball rows	Basic load ratings dynamic		static		Mass	Designations Linear ball bearing without seals	with 2 double lip seals
F_w	D	C	C_1	b		C min	max	C_0 min	max			
mm						N				kg	–	
12	22	32	22,6	1,3	5	800	1 220	570	930	0,02	**LBCD 12 D**	**LBCD 12 D-2LS**
16	26	36	24,6	1,3	5	950	1 400	655	1 060	0,025	**LBCD 16 D**	**LBCD 16 D-2LS**
20	32	45	31,2	1,6	6	1 730	2 550	1 120	1 800	0,055	**LBCD 20 D**	**LBCD 20 D-2LS**
25	40	58	43,7	1,85	6	2 600	3 800	1 430	2 320	0,106	**LBCD 25 D**	**LBCD 25 D-2LS**
30	47	68	51,7	1,85	6	3 800	5 600	2 320	3 750	0,120	**LBCD 30 D**	**LBCD 30 D-2LS**
40	62	80	60,3	2,15	6	6 550	9 650	3 350	5 700	0,200	**LBCD 40 D**	**LBCD 40 D-2LS**

1) Direction for max. load ratings
Upon request, these bearings are available in stainless steel version, identified by a HV6 suffix in the designation, e.g. LBCD 20 D-2LS/HV6
Linear ball bearings are available with double lip seal on one side only (seal located on the right side of the bearing - marked with the SKF logo on the cage). Designation example: LBCD 20 D-LS

Axial and rotational fixation – LBC, D series

Closed design

F_w **12 – 40** mm

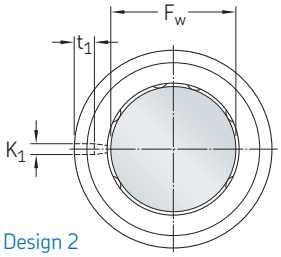

Design 2

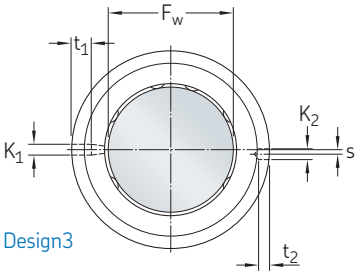

Design3

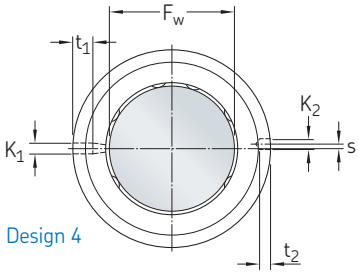

Design 4

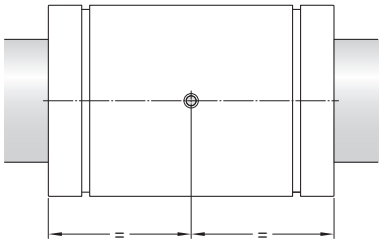

Dimensions						Design	Appropriate grease fittings[1]	Grub screws[2]	Pins[3] Diameter
F_w	K_1[4]	t_1	K_2[5]	t_2	s				
mm						–	–		mm
12	3,0	2,6	–	–	–	2	VN-LHC 20	M 4	3
16	3,0	2,6	–	–	–	2	VN-LHC 20	M 4	3
20	3,0	2,6	–	–	–	2	VN-LHC 20	M 4	3
25	3,5	4,5	3,0	1,4	1,5	3	VN-LHC 40	M 5	3,5 / 3
30	3,5	4,5	3,0	2,3	2	4	VN-LHC 40	M 5	3,5 / 3
40	3,5	4,5	3,0	2,7	1,5	4	VN-LHC 40	M 5	3,5 / 3

[1] Recommendations for holes to take grease fittings: → **page 15**
[2] Grub screws according to DIN EN 27435 or DIN EN ISO 4028.
[3] Straight pins according to DIN EN ISO 2338, slotted pins - DIN EN ISO 8752 or grooved pins - DIN EN ISO 8739 and DIN EN ISO 8744.
[4] For relubrication as well as location of linear bearing in SKF housings.
[5] Alternative bore hole for location in specific housings from other manufacturers.

Grease fittings – for LBC, D-series

F_w **12 – 40** mm

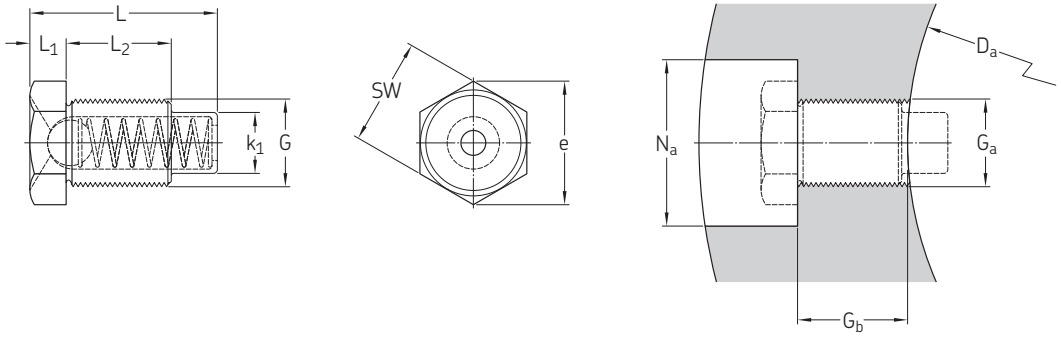

Dimensions Bearing	Grease fitting							**Designations** Grease fitting	**Attachment dimensions**[2] Housing			
F_w	G	L	L_1	L_2	k_1	e	SW		D_a	G_a	G_b ±0,2	N_a[1]
mm	–	mm						–	mm	–	mm	
12	M4	7,7	1,5	3,5	3,0	5,5	5	**VN-LHC 20**	22	M 4	3,8	13
16	M4	7,7	1,5	3,5	3,0	5,5	5	**VN-LHC 20**	26	M 4	3,8	13
20	M4	7,7	1,5	3,5	3,0	5,5	5	**VN-LHC 20**	32	M 4	3,8	13
25	M5	11,1	2,0	5,0	3,5	6,6	6	**VN-LHC 40**	40	M 5	5,2	15
30	M5	11,1	2,0	5,0	3,5	6,6	6	**VN-LHC 40**	47	M 5	5,2	15
40	M5	11,1	2,0	5,0	3,5	6,6	6	**VN-LHC 40**	62	M 5	5,2	15

[1] N_a: for LUC and LUN housings size 12, 16 and 20 different bore diameter.
[2] Recommended also for customized housings

Linear bearing units, ISO series 3

A comprehensive range of linear ball bearing units are available. In addition to the basic design - a housing containing a single bearing, there are also flanged units as well as tandem and quadro units available.

Linear bearing units consist of a lightweight, cast aluminium housing that has been optimized to provide high strength and stiffness. Due to their light weight, acceleration and inertia forces are kept to a minimum. LUC .. D linear bearing units are available for shaft diameters ranging from 12 to 40 mm.



LUCD .. D

LUCD .. D linear bearing units offer a simple means of creating an economical linear guidance system. LUCD .. D linear bearing units (for shaft diameters ranging from 12 to 40 mm) are normally supplied with a self-aligning LBCD .. D shielded or optional sealed linear ball bearing. A grease fitting serves to retain the bearing axially and prevent it from turning.



LUCE .. D

LUCE .. D linear bearing units are similar in design to the LUCD .. D units but instead of a closed housing, these units have a open housing with an adjustment screw. These units are typically used for arrangements requiring zero clearance or preload.



LUND .. D **LUNE .. D**

LUN .. D linear bearing units are supplied as standard with shielded or sealed self-aligning linear ball bearings. Two versions are available: closed (LUND .. D) and adjustable (LUNE .. D).

In contrast to the LUC .. D linear bearing unit previously described, the extruded aluminium housing envelops the linear ball bearing along its entire length.

The bearings can be retained in position axially and also prevented from turning via the grease fitting. These units can be relubricated.



LVCR .. D

LVCR .. D flanged linear bearing units consist of a closed flanged cast iron housing fitted with a rigid LBCR .. D linear ball bearing (12 to 40 mm). The bearing, sealed on both sides, is located axially by a dowel pin. The flange is machined on both faces to enable mounting on the front or rear in either direction. Flanged linear bearing units are not designed for relubrication.



LTCD .. D

LTC .. D tandem linear bearing units consist of a solid extruded aluminium housing and two self-aligning linear ball bearings mounted one behind the other. A grease fitting is used to secure each bearing in position to prevent it from turning.

Tandem linear bearing units enable the construction of linear guidance systems such as tables of any required width. The housing can be attached to its supporting surface from below using socket head cap screws or from above via the two threaded holes in the housing. The linear ball bearings are supplied with one seal on the external end, as standard. Shaft diameters range from 12 to 40 mm.



LQCD .. D

LQC .. D quadro linear bearing units consist of a one-piece aluminium housing with two bores arranged in parallel, each with two self-aligning linear ball bearings. The bearings are sealed on the external ends only. The bearings are retained in position axially and also prevented from turning via the grease fitting or dowel pin. Relubrication is possible.

LQCD .. D quadro units used in combination with LEAS tandem shaft blocks (closed design) (→ *Linear bearings and units*, 4182 EN, **page 46**) makes it possible to create simple linear slides and tables (→ *Linear bearings and units*, 4182 EN, **page 49** to **51**).

All quadro units can be attached to their support surface either with socket head cap screws inserted from below or via the threaded holes in the housing.

Note

All linear ball bearing units (12 to 40 mm) can be fitted with non-self-aligning linear ball bearings on request.

Linear bearing units – LUCD .. D

Closed housing, can be relubricated, equipped with LBCD .. D bearing, self-aligning

F_w **12 – 40** mm

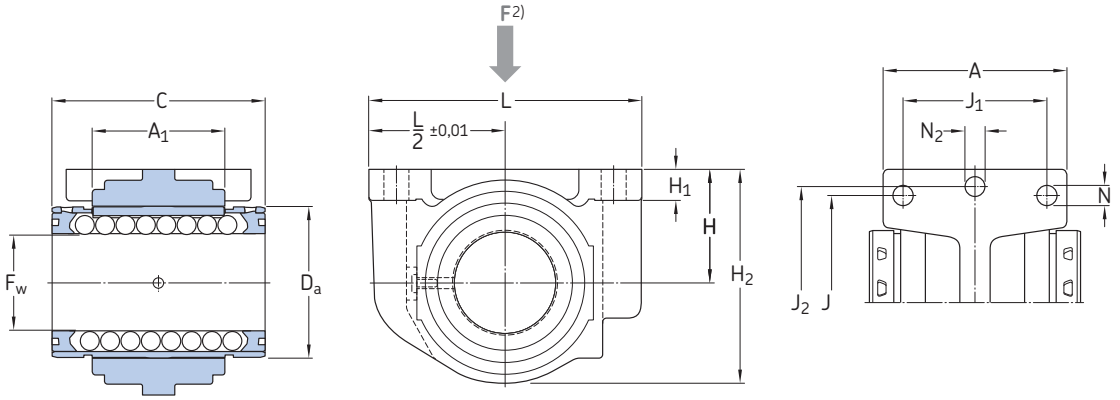

Without seals

Dimensions														Basic load ratings dynamic		static		Mass	Designations Linear ball bearing unit without seals	with 2 double lip seals
F_w	A	A_1	C	D_a	H ±0,01	H_1	H_2	J	J_1	J_2	L	$N^{1)}$	$N_2^{1)}$	C min	max	C_0 min	max			
mm														N				kg	–	
12	31	20	32	22	18	6	34,5	32	23	42	52	4,3	5,3	800	1 220	570	930	0,058	**LUCD 12 D**	**LUCD 12 D-2LS**
16	34,5	22	36	26	22	7	40,5	40	26	46	56	4,3	5,3	950	1 400	655	1 060	0,074	**LUCD 16 D**	**LUCD 16 D-2LS**
20	41	28	45	32	25	8	48	45	32	58	70	4,3	6,4	1 730	2 550	1 120	1 800	0,157	**LUCD 20 D**	**LUCD 20 D-2LS**
25	52	40	58	40	30	10	58	60	40	68	80	5,3	6,4	2 600	3 800	1 430	2 320	0,308	**LUCD 25 D**	**LUCD 25 D-2LS**
30	59	48	68	47	35	10	67	68	45	76	88	6,4	6,4	3 800	5 600	2 320	3 750	0,39	**LUCD 30 D**	**LUCD 30 D-2LS**
40	74	56	80	62	45	12	85	86	58	94	108	8,4	8,4	6 550	9 650	3 350	5 700	0,66	**LUCD 40 D**	**LUCD 40 D-2LS**

LUCD .. D linear ball bearing units are available on request with ball bearings in stainless steel execution. Designation: e.g. LUCD 20 D-2LS/HV6

LUCD .. D linear ball bearing units can also be fitted with rigid linear ball bearings of type LBCR .. D. Designation: e.g. LUCR 20 D-2LS.

For suitable shaft blocks LSCS/LSNS for these bearing units → *Linear bearings and units* (4182 EN).

[1] For cylindrical screws with internal hexagon to DIN 912 / ISO 4762.
[2] Direction for max. load ratings

Linear bearing units – LUCE .. D

Slotted housing, can be relubricated, clearance adjustable, equipped with LBCD .. D bearing, self-aligning

F_w **12 – 40** mm

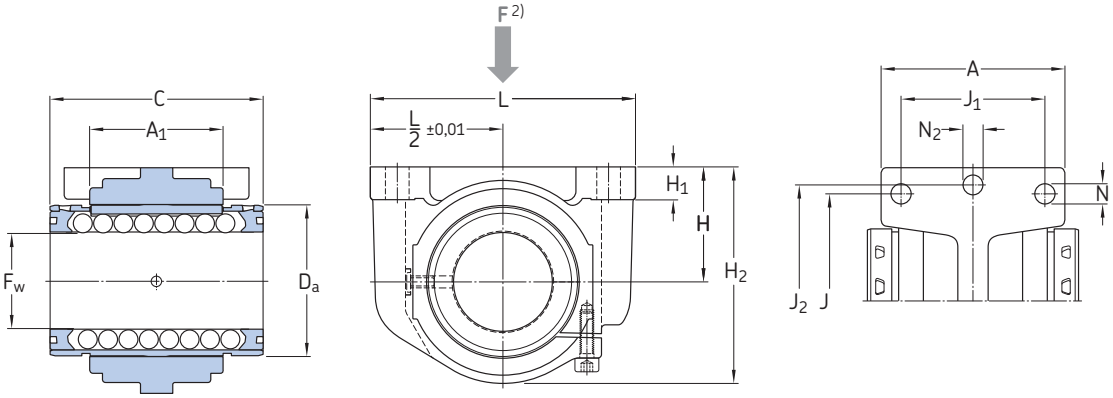

Without seals

Dimensions														Basic load ratings				Mass	Designations	
														dynamic		static			Linear ball bearing unit without seals	with 2 double lip seals
F_w	A	A_1	C	D_a	H ±0,01	H_1	H_2	J	J_1	J_2	L	$N^{1)}$	$N_2{}^{1)}$	C min	max	C_0 min	max			
mm														N				kg	–	
12	31	20	32	22	18	6	34,5	32	23	42	52	4,3	5,3	800	1 220	570	930	0,058	**LUCE 12 D**	**LUCE 12 D-2LS**
16	34,5	22	36	26	22	7	40,5	40	26	46	56	4,3	5,3	950	1 400	655	1 060	0,074	**LUCE 16 D**	**LUCE 16 D-2LS**
20	41	28	45	32	25	8	48	45	32	58	70	4,3	6,4	1 730	2 550	1 120	1 800	0,157	**LUCE 20 D**	**LUCE 20 D-2LS**
25	52	40	58	40	30	10	58	60	40	68	80	5,3	6,4	2 600	3 800	1 430	2 320	0,308	**LUCE 25 D**	**LUCE 25 D-2LS**
30	59	48	68	47	35	10	67	68	45	76	88	6,4	6,4	3 800	5 600	2 320	3 750	0,39	**LUCE 30 D**	**LUCE 30 D-2LS**
40	74	56	80	62	45	12	85	86	58	94	108	8,4	8,4	6 550	9 650	3 350	5 700	0,66	**LUCE 40 D**	**LUCE 40 D-2LS**

Upon request LUCE .. D linear ball bearing units are available with ball bearings in stainless steel execution. Designation: e.g. LUCE 20 D-2LS/HV6

LUCE .. D linear ball bearing units can also be fitted with rigid linear ball bearings of type LBCR ... D. Designation: e.g. LUCS 20 D-2LS.

For suitable shaft blocks LSCS/LSNS for these bearing units → *Linear bearings and units* (4182 EN).

[1] For cylindrical screws with internal hexagon to DIN 912 / ISO 4762.
[2] Direction for max. load ratings

Linear bearing units – LUND .. D

closed housing, can be relubricated, equipped with LBCD .. D bearing, self-aligning

F_w **12 – 40** mm

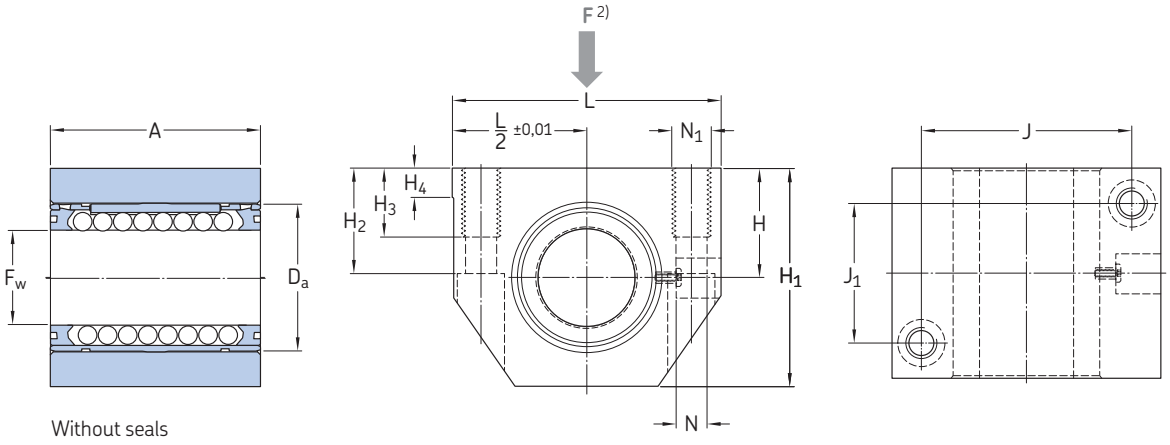

Without seals

Dimensions													Basic load ratings dynamic		static		Mass	Designations Linear ball bearing unit without seals	with 2 double lip seals
F_w	A	D_a	H ±0,01	H_1	H_2	H_3	H_4	J	J_1	L	$N^{1)}$	$N_1{}^{1)}$	C min	max	C_0 min	max			
mm													N				kg	–	
12	32	22	18	35	16,5	11	6	32	23	43	4,3	M 5	800	1 220	570	930	0,098	**LUND 12 D**	**LUND 12 D-2LS**
16	37	26	22	42	21	13	7	40	26	53	5,3	M 6	950	1 400	655	1 060	0,166	**LUND 16 D**	**LUND 16 D-2LS**
20	45	32	25	50	24	18	7,5	45	32	60	6,6	M 8	1 730	2 550	1 120	1 800	0,268	**LUND 20 D**	**LUND 20 D-2LS**
25	58	40	30	61	29	22	8,5	60	40	78	8,4	M 10	2 600	3 800	1 430	2 320	0,556	**LUND 25 D**	**LUND 25 D-2LS**
30	68	47	35	70	34	22	9,5	68	45	87	8,4	M 10	3 800	5 600	2 320	3 750	0,78	**LUND 30 D**	**LUND 30 D-2LS**
40	80	62	45	90	44	26	11	86	58	108	10,5	M 12	6 550	9 650	3 350	5 700	1,43	**LUND 40 D**	**LUND 40 D-2LS**

Upon request LUND .. D linear ball bearing units are available with ball bearings in stainless steel execution. Designation: e.g. LUND 20 D-2LS/HV6.

For suitable shaft blocks LSCS/LSNS for these bearing units → *Linear bearings and units* (4182 EN).

LUND .. D linear ball bearing units can also be fitted with rigid linear ball bearings of type LBCR .. D. Designation: e.g. LUNR 20 D-2LS.

[1] For cylindrical screws with internal hexagon to DIN 912 / ISO 4762.
[2] Direction for max. load ratings

Linear bearing units – LUNE .. D

slotted housing, can be relubricated, clearance adjustable, equipped with LBCD .. D bearing, self-aligning

F_w **12 – 40** mm

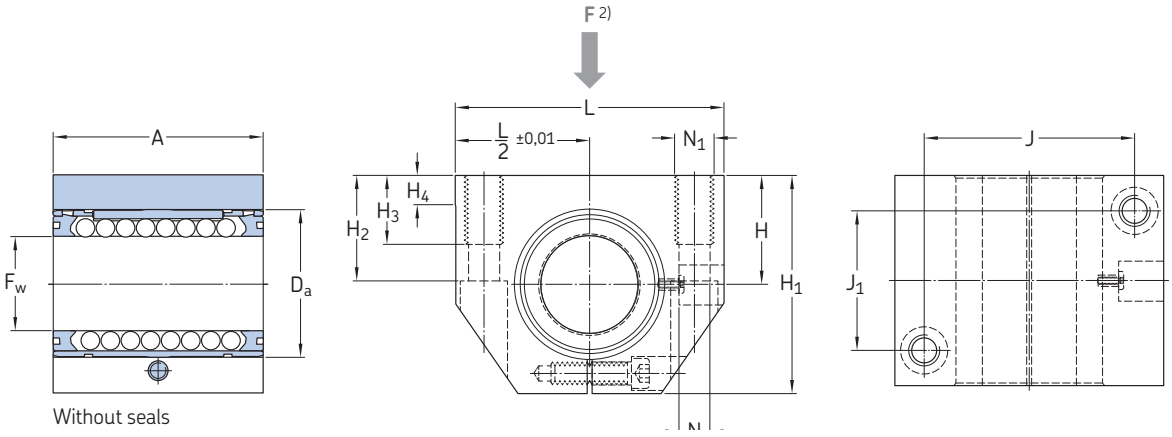

Dimensions													Basic load ratings dynamic		static		Mass	Designations Linear ball bearing unit without seals	with 2 double lip seals
F_w	A	D_a	H ±0,01	H_1	H_2	H_3	H_4	J	J_1	L	$N^{1)}$	$N_1{}^{1)}$	C min	max	C_0 min	max			
mm													N				kg	–	
12	32	22	18	35	16,5	11	6	32	23	43	4,3	M 5	800	1 220	570	930	0,097	**LUNE 12 D**	**LUNE 12 D-2LS**
16	37	26	22	42	21	13	7	40	26	53	5,3	M 6	950	1 400	655	1 060	0,165	**LUNE 16 D**	**LUNE 16 D-2LS**
20	45	32	25	50	24	18	7,5	45	32	60	6,6	M 8	1 730	2 550	1 120	1 800	0,268	**LUNE 20 D**	**LUNE 20 D-2LS**
25	58	40	30	61	29	22	8,5	60	40	78	8,4	M 10	2 600	3 800	1 430	2 320	0,556	**LUNE 25 D**	**LUNE 25 D-2LS**
30	68	47	35	70	34	22	9,5	68	45	87	8,4	M 10	3 800	5 600	2 320	3 750	0,782	**LUNE 30 D**	**LUNE 30 D-2LS**
40	80	62	45	90	44	26	11	86	58	108	10,5	M 12	6 550	9 650	3 350	5 700	1,385	**LUNE 40 D**	**LUNE 40 D-2LS**

Upon request LUNE .. D linear ball bearing units are available with ball bearings in stainless steel execution. Designation: e.g. LUNE 20 D-2LS/HV6

For suitable shaft blocks LSCS/LSNS for these bearing units → *Linear bearings and units* (4182 EN).

LUNE .. D linear ball bearing units can also be fitted with rigid linear ball bearings of type LBCR .. D. Designation: e.g. LUNS 20 D-2LS.

[1] For cylindrical screws with internal hexagon to DIN 912 / ISO 4762.
[2] Direction for max. load ratings

Flanged linear bearing units – LVCR .. D

closed housing, equipped with LBCR .. D bearing

F_w **12 – 40** mm

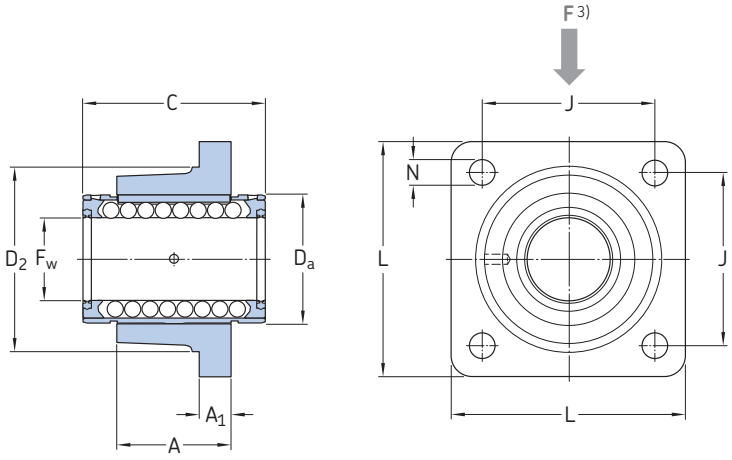

With 2 double lip seals

Dimensions									Basic load ratings dynamic		static		Mass	Designations Linear bearing unit with 2 double lip seals[2]
F_w	A	A_1	C	D_a	D_2	J	L	N[1]	C min	max	C_0 min	max		
mm									N				kg	
12	20	8	32	22	32	30	42	5,5	930	1 370	695	1 120	0,118	**LVCR 12 D-2LS**
16	22	8	36	26	38	35	50	5,5	1 080	1 600	800	1 290	0,166	**LVCR 16 D-2LS**
20	28	10	45	32	46	42	60	6,6	2 200	3 250	1 630	2 650	0,327	**LVCR 20 D-2LS**
25	40	12	58	40	58	54	74	6,6	3 100	4 550	2 360	3 800	0,678	**LVCR 25 D-2LS**
30	48	14	68	47	66	60	84	9	4 800	7 100	3 550	5 700	0,97	**LVCR 30 D-2LS**
40	56	16	80	62	90	78	108	11	7 650	11 200	5 100	8 300	1,85	**LVCR 40 D-2LS**

Upon request LVCR .. D linear ball bearing units are available with ball bearings in stainless steel execution (housing out of cast iron). Designation: e.g. LVCR 20 D-2LS/HV6

LVCR .. D linear ball bearing units of sizes F_w 12–40 can also be fitted with linear bearings which are self-aligning. Designation: e.g. LVCD 20 D-2LS.

[1] For cylindrical screws with internal hexagon to DIN 912 / ISO 4762.
[2] Linear ball bearings fitted to these units are secured using grooved pins - DIN EN ISO 8739 and DIN EN ISO 8744. They are not designed for relubrication.
[3] Direction for max. load ratings

Tandem linear bearing units – LTCD .. D

closed housing, can be relubricated, equipped with LBCD .. D bearing, self-aligning

F_w **12 – 40** mm

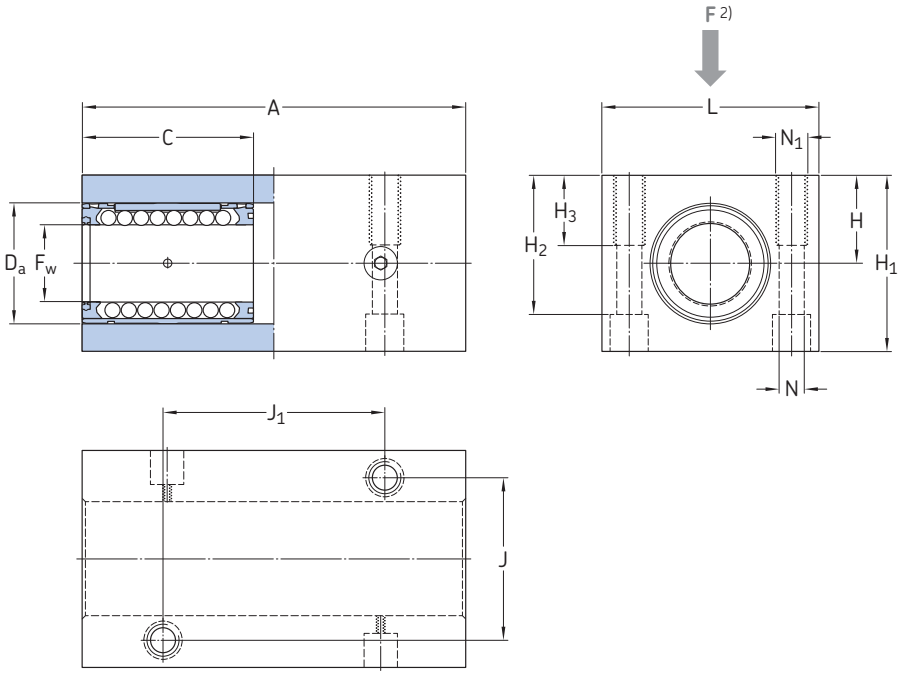

With double lip seals on the outside

Dimensions													Basic load ratings dynamic		static		Mass	Designations Linear bearing unit with double lip seals
F_w	A	C	D_a	H ±0,01	H_1	H_2	H_3	J	J_1	L	$N^{1)}$	$N_1{}^{1)}$	C min	max	C_0 min	max		
mm													N				kg	–
12	76	32	22	18	35	27	13	30	40	42	5,3	M 6	1 290	2 000	1 140	1 860	0,246	**LTCD 12 D-2LS**
16	84	36	26	22	41,5	33	13	36	45	50	5,3	M 6	1 530	2 280	1 320	2 120	0,382	**LTCD 16 D-2LS**
20	104	45	32	25	49,5	39,5	18	45	55	60	6,4	M 8	2 800	4 150	2 240	3 600	0,696	**LTCD 20 D-2LS**
25	130	58	40	30	59,5	47	22	54	70	74	8,4	M 10	4 250	6 200	2 850	4 650	1,282	**LTCD 25 D-2LS**
30	152	68	47	35	69,5	55	26	62	85	84	10,5	M 12	6 200	9 150	4 650	7 500	1,85	**LTCD 30 D-2LS**
40	176	80	62	45	89,5	71	34	80	100	108	13	M 16	10 600	15 600	6 700	11 400	3,43	**LTCD 40 D-2LS**

Upon request LTCD .. D linear ball bearing units are available with ball bearings in stainless steel execution. Designation: e.g. LTCD 20 D-2LS/HV6.

For suitable shaft blocks LSCS/LSNS for these bearing units → *Linear bearings and units* (4182 EN).

LTCD .. D linear ball bearing units can also be fitted with rigid linear ball bearings of type LBCR .. D. Designation: e.g. LTCR 20 D-2LS.

[1] For 2 cylindrical screws with internal hexagon to DIN 912 / ISO 4762.
[2] Direction for max. load ratings

Quadro linear bearing units – LQCD .. D

closed housing, can be relubricated, equipped with LBCD .. D bearing, self-aligning

F_w **12 – 40** mm

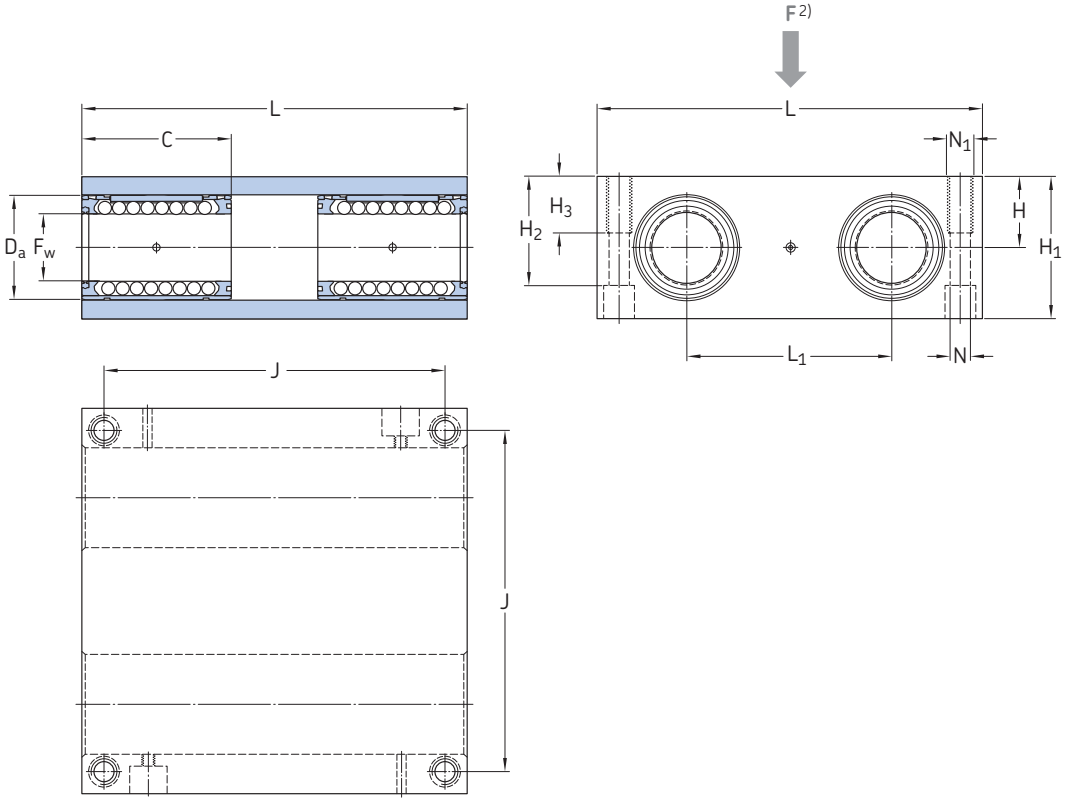

With double lip seals on the outside

Dimensions												Basic load ratings dynamic		static		Mass	Designations Linear bearing unit with double lip seals
F_w	C	D_a	H ±0,01	H_1	H_2	H_3	J	L	L_1	$N^{1)}$	$N_1{}^{1)}$	C min	max	C_0 min	max		
mm												N				kg	–
12	32	22	16	32	25	13	73	85	42	5,3	M 6	2 120	3 200	2 280	3 750	0,512	**LQCD 12 D-2LS**
16	36	26	18	36	29	13	88	100	54	5,3	M 6	2 500	3 650	2 600	4 250	0,764	**LQCD 16 D-2LS**
20	45	32	23	46	37,5	18	115	130	72	6,6	M 8	4 550	6 700	4 500	7 200	1,732	**LQCD 20 D-2LS**
25	58	40	28	56	45	22	140	160	88	8,4	M 10	6 800	10 000	5 700	9 300	3,114	**LQCD 25 D-2LS**
30	68	47	32	64	50,5	26	158	180	96	10,5	M 12	10 000	14 600	9 300	15 000	4,23	**LQCD 30 D-2LS**
40	80	62	40	80	64	34	202	230	122	13,5	M 16	17 300	25 500	13 400	22 800	8,14	**LQCD 40 D-2LS**

Upon request LQCD .. D linear ball bearing units are available with ball bearings in stainless steel execution. Designation: e.g. LQCD 20 D-2LS/HV6

For suitable shaft blocks for these bearing units, designation LEAS .. A and LEAS .. B → *Linear bearings and units* (4182 EN).

LQCD .. D linear ball bearing units can also be fitted with rigid linear ball bearings of type LBCR .. D. Designation: e.g. LQCR 20 D-2LS.

[1] For 4 cylindrical screws with internal hexagon to DIN 912 / ISO 4762.
[2] Direction for max. load ratings

Please complete the form with all available information and send it to your SKF representative or authorized distributor for product selection.

SKF contact	Date

General information

Customer

Company		
Address 1		
Address 2		
Post code / Zip	City	State
Country		

Contact

Contact name	
Job title	
Department	
Phone (including country code)	Mobile (including country code)
Mail	

Reason for request

Current product / brand		Description
○ Replacement	○ New design	○ Other

Application / Industry

			Description
○ Factory automation	○ Food and beverage	○ Machine tools	
○ Medical	○ Semiconductor		○ Other

Application description

Specification sheet – Linear Ball bearing

Stroke
mm

Shaft length
mm

Center distance between
bearings, c: mm
shafts, d: mm

or Short part dimensions
Length: mm
Width: mm

Guiding system
Maximum height: mm
○ No constraints

Required service life distance or time (fill in all fields)

Distance	Total time	Period of one cycle	Stroke of one cycle
km	h	s	mm

Required static safety (in accordance to your business and application)

Maximum speed[1)]
m/s

Maximum acceleration[1)]
m/s²

1) Here the maximum values. Enter load phase specific values in table "External loads and load phases"

Rigidity of guiding system
N/µm
○ No specific requirements

Running accuracy of guiding system
Parallelism in height: µm
Parallelism in sideward direction: µm

Environment

Presence of dust, dirt or fluids
- ○ Clean environment, e.g. laboratory
- ○ Standard industrial environment
- ○ Dirty environment, e.g. milling machine

Requirements on friction
- ○ Lowest possible friction
- ○ Standard friction
- ○ No requirement

Preferred sealing version
- ○ Shield
- ○ Sealing on one side (-LS)
- ○ Sealing on both sides (-2LS)
- ○ Additional sealing

○ Humid or corrosive environment
If yes, please describe:

Preferred material
- ○ No preference (standard)
- ○ Stainless steel balls and raceways
- ○ Stainless steel shaft
- ○ Chrome plated shaft

Temperature [°C]

Minimum	Operating	Maximum

○ Shock loads or vibrations
If yes, please describe:

Lubricant

○ Standard prelubrication by SKF, as stated in the catalogue.

○ Other
Please specify:

Sketch of the application (or attach a drawing)

Product details

Product designation (if already known)

ISO series (ISO 10285)
- ○ ISO Series 1
- ○ ISO Series 3

Bearing type
- ○ Linear ball bearing
- ○ Linear plain bearing

Bearing design
- ○ Closed design
- ○ Open design (for supported shafts)

- ○ Non self aligning (permissible shaft deflection without reduction ±5′ of arc)
- ○ Self aligning (permissbile shaft deflection ±30′ of arc)

Needed accessories (for details see SKF publication 4182, Linear ball bearings and units)

○ Shaft — Designation: LJ ... — Length: mm — Shafting standard: ESSC ...

○ Housing — Designation:

○ Single shaft block — Designation: LS ...

○ Tandem shaft block — Designation: LE ...

Linear ball bearings mounted as a complete system

○ System — Designation: LZ ...

○ System with drive, e.g. ball screw

Input for dimensioning calculation

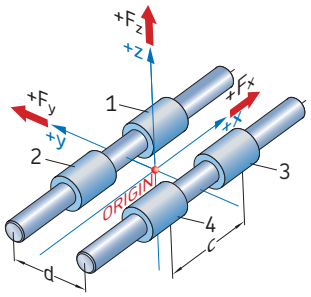

○ Config 24

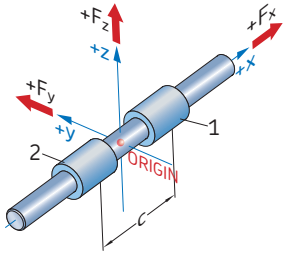

○ Config 12

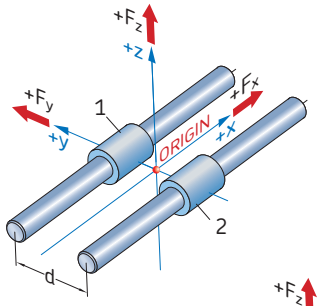

○ Config 22

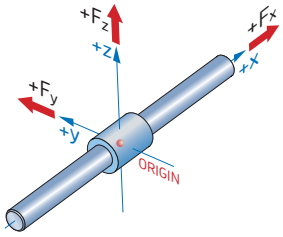

○ Config 11

○ No preference ○ Other	If yes, please describe:

Moving direction (set coordinate system accordingly)

		Please specify:
○ Horizontal	○ Vertical	○ Other

External loads and load phases

Forces in N, Lever arms in mm measured from defined origin (see graphics above). If the application has more than 3 load phases, please copy this page.

Load phase 1	
Stroke	mm
Acceleration	mm/s²
Speed	m/s

Lever arms in

Force F_x	x	y	z
	X		

Force F_y	x	y	z
		X	

Force F_z	x	y	z
			X

Load phase 2	
Stroke	mm
Acceleration	mm/s²
Speed	m/s

Lever arms in

Force F_x	x	y	z
	X		

Force F_y	x	y	z
		X	

Force F_z	x	y	z
			X

Load phase 3	
Stroke	mm
Acceleration	mm/s²
Speed	m/s

Lever arms in

Force F_x	x	y	z
	X		

Force F_y	x	y	z
		X	

Force F_z	x	y	z
			X

® SKF is a registered trademark of the SKF Group.

© SKF Group 2016
The contents of this publication are the copyright of the publisher and may not be reproduced (even extracts) unless prior written permission is granted. Every care has been taken to ensure the accuracy of the information contained in this publication but no liability can be accepted for any loss or damage whether direct, indirect or consequential arising out of the use of the information contained herein.

PUB MP/P2 14058/3 EN · February 2016

Certain image(s) used under license from Shutterstock.com

