

Version of 06/12/2025

WK 6000IS/3TI Kit





Universal power supply



Hot-swappable plug in and out



ModBus RTU

JM Concept - 18 Chemin des Tard-Venus - 69530 Brignais - France
Contact : +33 (0) 4 72 318 318 - jmc@jmconcept.com
www.jmconcept.com

Presentation

The WK 6000IS/3TI kit includes:

- A WK 6000 measures and converts every electrical magnitudes (voltage, current, power …) on all kind of power transmission network (single phase, balanced three-wire, unbalanced three-wire, balanced four wire, unbalanced four-wire).



- Three square-type current transformers encapsulated with UL94V-0 approved polycarbonate. These metering CT’s feature sealable terminal covers.



WK 6000IS

Factory Settings

Main Power inputs	Network Type	Integration time	Frequency measurement on
	4 unbalanced wires	10min	U
Voltage input	**Calibre**	**external VT**	**Cut-off**
	700V	without	10V
Current input	**Primary**	**Secondary**	**Cut-off**
	5A	5A	0.150 A

Communication speed: 38400 bauds, Slave address: n°1

Communication	MODBUS/TCP		
	IP Address	Port	Netmask
	192.168.1.253	502	255.255.255.0

Inputs

Input gauges

Current (alternating)	Standard scales: 0-5A ; 0-1A
Voltage (alternating)	Standard scales: 0-100V ; 0-250V ; 0-500V ; 0-700V
CT Ratio	TI: Primary from 1 to 9999A ; secondary 5A or 1A
VT Ratio	TP: Primary from 1 to 100000V ; secondary from 1 to 700V

Communication

Communication	Isolated USB in Front Panel / isolated RS485 Modbus RTU RJ45, Modbus TCP/IP

Available measurements

Primary measures	Number	Primary measures	Number
Voltage between phases	3	Frequency	3
Average voltage between phases	1	Cos phi per phase	3
Voltage between phase and neutral	3	Average Cos phi	1
Line current	3	Tangent phi	1
Neutral current	1	Phase angle	1
Average current	1		
Power measures	**Number**	**Power measures**	**Number**
Total active power	1	Average reactive power IN	1
Reactive power per phase	3	Average reactive power OUT	1
Total reactive power	1	Maximum active power IN	1
Apparent power per phase	3	Maximum active power OUT	1
Total apparent power	1	Maximum reactive power IN	1
Average active power IN	1	Maximum reactive power OUT	1
Average active power OUT	1		
Energy measures	**Number**	**Energy measures**	**Number**
Active energy IN	1	Active energy OUT	1
Reactive energy IN	1	Reactive energy OUT	1
Apparent energy IN	1	Apparent energy OUT	1

Characteristics

Current input characteristics	
Current input impedance	5mΩ
Type of measure	on CT
Permissible overload	50A maximum during 1s
Minimum measurable signal	50mA
Maximum measurable signal	2.5A on the calibre 0-1A / 7A on the calibre 0-5A
Cut-off	Programmable from 0 to 1.00A
Voltage input characteristics	
Voltage input Impedance	>16MΩ
Permissible overload	1000V permanent
Minimum measurable signal	2V
Minimum measurable signal	150V calibre 0-100V ; 340V calibre 0-250V ; 600V sur calibre 0-500V ; 750V calibre 0-700V
Cut-off	Programmable from 0 to 50V
Output characteristics	
Permissible impedance on the current output	<1kΩ
Isolation	
Supply / Input-RS485-USB-(RJ45)	4200Vrms, 50Hz, 1mn
Input / RS485 / USB	2500Vrms, 50Hz, 1mn
Input / RJ45	Without
Input x / Input y	Without
Auxiliary source	
Voltage supply	22-240Vdc or 90-230Vac 50/60Hz

General characteristics	
Precision class of primary values (I,U,F)	0.5
Precision class of composed values (I,U,F)	0.5
Response time	<300ms
Integration time	Programmable from 0 to 99 minutes
Thermal drift	<100ppm
Residual ripple on current output	<20µA
True RMS measurement	Up to rank 11
Sampling frequency	2000Hz per phase
Maximum of consumption	<8VA
Operating temperature	-25°C … +60°C
Storage temperature	-40°C … +80°C
Relative humidity	<80% HR (non-condensing)
Protection factor	IP20 Black self-extinguishing polyamide housing V0

Functions

Display functions	
LED indicators	1 green LED on devices without display
Programming	Programming via USB with **IXLOG** software
Memory Mini / Maxi	Storage of the maximum and minimum value of the measurement on each input channel
Input	
Input display	The display allows to visualize the input in physical value and in programmed value
Cut-off	Threshold below which the input is considered as null
Smart functions	
Filtering	Integration of the measurement over the defined time (in seconds)
Outputs	
Thresholds	Single or band mode, with positive or negative safety Adjustment of thresholds, hysteresis and time delay (independent on rise or fall) Direct access to the thresholds
Acknowledgement of alarms	Independently for each alarm
Storage of alarms and/or relay status	Independently for each alarm

Links and communication	
RS485 MODBUS RTU	RS485 MODBUS RTU bidirectional digital link allowing to: • recover the measurements and transmit them in digital format • configure and control the device
MODBUS TCP	Bidirectional link via the RJ45 port allowing to: • recover measurements and transmit them in digital format • configure and control the device • make a Modbus-TCP-Modbus RTU gateway to communicate with other JM devices on the same RS485 bus as the WK 6000IS
Digital bus	Access to the digital bus via the USB socket (when transmitters are used on the interface boards)
USB front	USB front panel to connect directly to the USB port of a PC for programming via the **IXLOG** software
Mapping of Modbus addresses	Mapping of Modbus addresses, allowing you to choose your own variable address

Dimensions and wiring

Dimensions

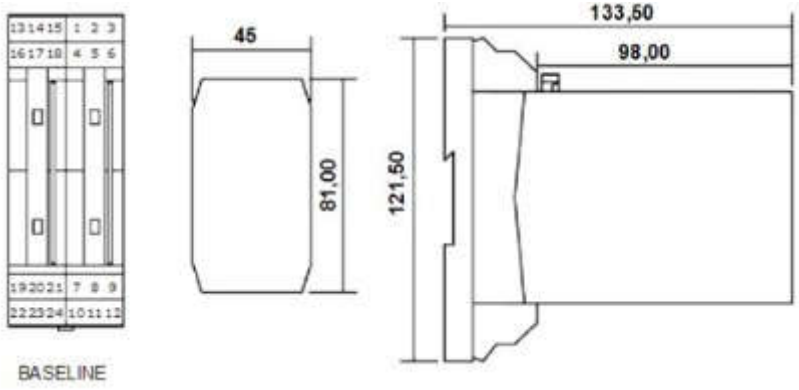

Dimensions: width: 45mm - Height: 81 mm - Depth: 98 mm

Wiring

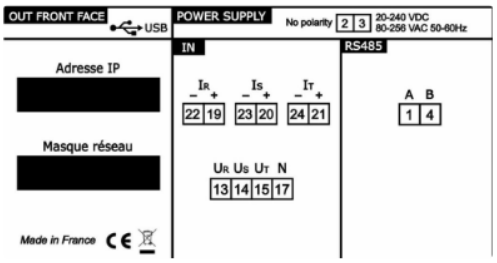

Current Transformer

Characteristics

Characteristics	
Primary current	50A
Secondary current	5A
Accuracy class	Class 1
Power	1.5VA
Over current limiting factor	FS5, FS10, FS15
Rated frequency	50 or 60Hz
Rated continuous thermal current (standard)	1,2 x in
Rated short time thermal current	with 60 x in, 1s (max. 40kA)
Rated isolation level	0.72 / 3kV or 0.72 / 4kV
Altitude	2000m
Degree of pollution	2
Ambient temperature	-5 to +55 °C
Storage temperature	-25 to +70 °C
Relative humidity	0 - 95% relative humidity, non condensing
Degree of protection	IP20

Dimensions

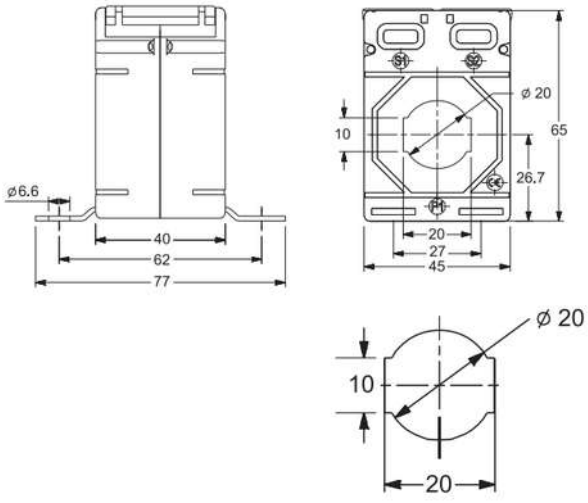

Width: 45mm, depth: 40mm, height: 65mm