# PX3238

## Pressure transmitter with ceramic measuring cell

PA-0,5PRBN14-A-ZVG/US/ /V

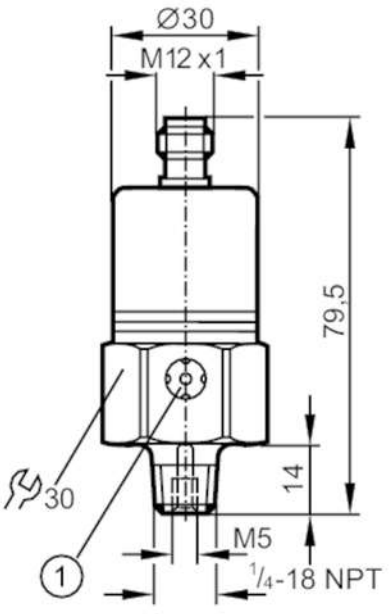


1 ventilation

| | | | |
|---|---|---|---|
| **Product characteristics** | | | |
| Number of inputs and outputs | | Number of analogue outputs: 1 | |
| Measuring range | | 0...5 psi | 0...34.5 kPa |
| Process connection | | threaded connection 1/4" NPT external thread internal thread:M5 | |
| **Application** | | | |
| Special feature | | Gold-plated contacts | |
| Application | | for industrial applications | |
| Media | | liquids and gases | |
| Medium temperature | [°C] | -25...90 | |
| Min. bursting pressure | | 450 psi | 3.1 MPa |
| Pressure rating | | 145 psi | 1 MPa |
| Type of pressure | | relative pressure | |
| **Electrical data** | | | |
| Operating voltage | [V] | 9.6...32 DC | |
| Min. insulation resistance | [MΩ] | 100; (500 V DC) | |
| Protection class | | III | |
| Reverse polarity protection | | yes | |
| **Inputs / outputs** | | | |
| Number of inputs and outputs | | Number of analogue outputs: 1 | |
| **Outputs** | | | |
| Total number of outputs | | 1 | |
| Output signal | | analogue signal | |
| Number of analogue outputs | | 1 | |
| Analogue current output | [mA] | 4...20 | |

# PX3238

## Pressure transmitter with ceramic measuring cell

PA-0,5PRBN14-A-ZVG/US/ /V

| | | | |
|---|---|---|---|
| Max. load | [Ω] | 720; (Ub = 24 V; (Ub - 9,6 V) / 20 mA) | |
| Overload protection | | yes | |
| **Measuring/setting range** | | | |
| Measuring range | | 0...5 psi | 0...34.5 kPa |
| **Accuracy / deviations** | | | |
| Repeatability | [% of the span] | < 0,15; (with temperature fluctuations < 10 K) | |
| Characteristics deviation | [% of the span] | < ± 0,25 (BFSL) / < ± 0,5 (LS); (BFSL = Best Fit Straight Line; LS = limit value setting) | |
| Long-term stability | [% of the span] | < ± 0,1; (per 6 months) | |
| Temperature coefficient zero point | [% of the span / 10 K] | 0,3; (0...80 °C) | |
| Temperature coefficient span | [% of the span / 10 K] | 0,5; (0...80 °C) | |
| **Response times** | | | |
| Step response time analogue output | [ms] | 3 | |
| **Operating conditions** | | | |
| Ambient temperature | [°C] | -25...80 | |
| Storage temperature | [°C] | -40...100 | |
| Protection | | IP 67 | |
| **Tests / approvals** | | | |
| EMC | | EN 61000-4-2 ESD | 4 kV CD / 8 kV AD |
| | | EN 61000-4-3 HF radiated | 30 V/m |
| | | EN 61000-4-4 Burst | 2 kV |
| | | EN 61000-4-6 HF conducted | 10 V |
| | | radiation of interference | according to the automotive directive 2004/104/EC / CISPR 25 |
| | | immunity | according to the automotive directive 2004/104/EC / ISO 11452-2 |
| | | HF radiated | 100 V/m |
| | | pulse resistance | ISO 7637-2 / severity level 3 |
| Shock resistance | | DIN IEC 68-2-27 | 50 g (11 ms) |
| Vibration resistance | | DIN IEC 68-2-6 | 20 g (10...2000 Hz) |
| Pressure Equipment Directive | | Sound engineering practice; can be used for group 2 fluids; group 1 fluids on request | |
| **Mechanical data** | | | |
| Weight | [g] | 213 | |
| Housing | | cylindrical | |
| Dimensions | [mm] | Ø 30 / L = 79.5 | |
| Materials | | stainless steel (316L/1.4404); FKM; PA; EPDM/X | |
| Materials (wetted parts) | | stainless steel (303/1.4305); ceramics; FKM | |
| Min. pressure cycles | | 100 million | |
| Process connection | | threaded connection 1/4" NPT external thread internal thread:M5 | |
| Restrictor element integrated | | no (can be retrofitted) | |

# PX3238

## Pressure transmitter with ceramic measuring cell

PA-0,5PRBN14-A-ZVG/US/ /V

### Remarks

| | |
|---|---|
| Pack quantity | 1 pcs. |

### Electrical connection

Connector: 1 x M12; coding: A; Contacts: gold-plated




### Connection

