120x120x38 mm

SUNON

85-100 CFM



Model	P/N	Bearing ● VAPO ○ BALL ◉ Sleeve	Rating Voltage (VAC)	Freq. (Hz)	Power Current (AMP)	Power Consumption (WATTS)	Speed (RPM)	Air Flow (CFM)	Static Pressure (Inch-H_2O)	Noise (dBA)	Weight (g)
SP109WR	1123HST.GN	◉	115	50/60	0.25/0.22	22/20	2500/2900	85/100	0.28/0.35	41/47	465
SP109WR	1123HSL.GN	◉	115	50/60	0.25/0.22	22/20	2500/2900	85/100	0.28/0.35	41/47	465
SP109WR	1123HBT.GN	○	115	50/60	0.25/0.22	22/20	2500/2900	85/100	0.25/0.30	42/48	465
SP109WR	1123HBL.GN	○	115	50/60	0.25/0.22	22/20	2500/2900	85/100	0.25/0.30	42/48	465
DP209WR	2123HST.GN	◉	220-240	50/60	0.13/0.12	22/21	2500/2900	85/100	0.28/0.35	41/47	465
DP209WR	2123HSL.GN	◉	220-240	50/60	0.13/0.12	22/21	2500/2900	85/100	0.28/0.35	41/47	465
DP209WR	2123HBT.GN	○	220-240	50/60	0.13/0.12	22/21	2500/2900	85/100	0.25/0.30	42/48	465
DP209WR	2123HBL.GN	○	220-240	50/60	0.13/0.12	22/21	2500/2900	85/100	0.25/0.30	42/48	465

Frame : PBT Plastic

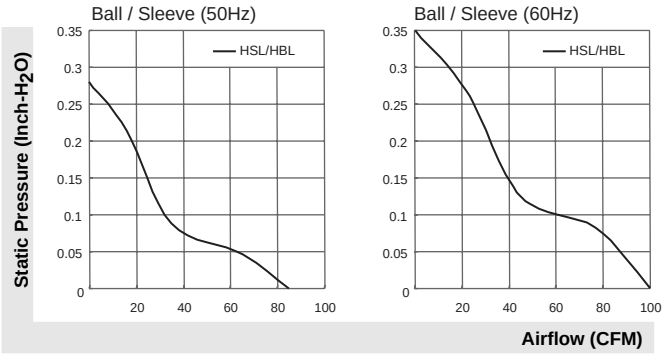

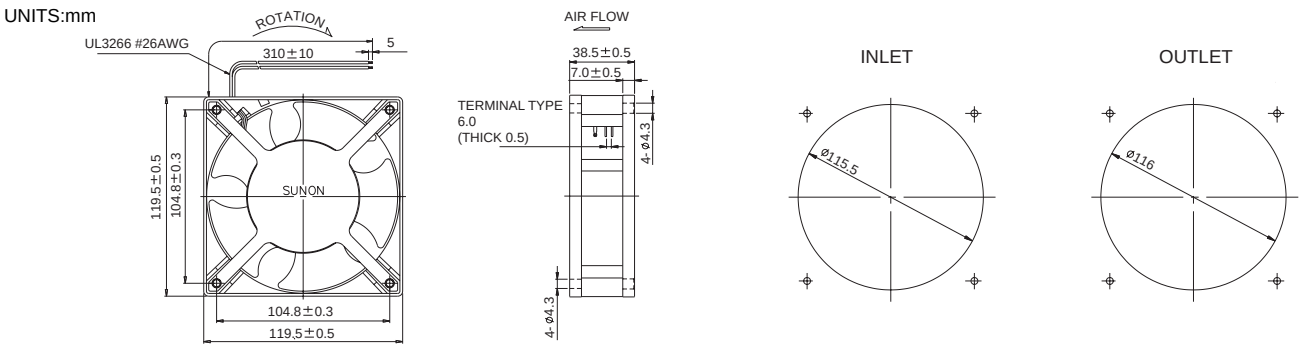

*All model could be customized on voltage or any other requirements to fit your need.
*Specifications subject to change without notice. Please Visit SUNON web site at http://www.sunon.com for update information.