Spherical roller bearings 22205-E1-XL (Series 222..-E1)

main dimensions to DIN 635-2

The datasheet is only an overview of dimensions and basic load ratings of the selected product. Please always observe all the guidelines in these overview pages. Further information is given on many products under the menu item "Description". You can also order comprehensive information via the Catalogue selection system (https://www.schaeffler.de/content.schaeffler.de/en/news_media/index.jsp) or by telephone on +49 (91 32) 82 - 28 97.

d	25	mm
D	52	mm
B	18	mm
D_1	44,4	mm
d_2	31,5	mm
$D_{a\ max}$	46,4	mm
$d_{a\ min}$	30,6	mm
d_s	3,2	mm
n_s	4,8	mm
$r_{a\ max}$	1	mm
r_{min}	1	mm

m	0,191 kg	Mass
C_r	48500 N	Basic dynamic load rating, radial
C_{0r}	42500 N	Basic static load rating, radial
C_{ur}	4900 N	Fatigue limit load, radial
n_G	14400 1/min	Limiting speed
$n_{\vartheta r}$	9200 1/min	Reference speed
e	0,33	
Y_1	2,07	
Y_2	3,09	
Y_0	2,03	

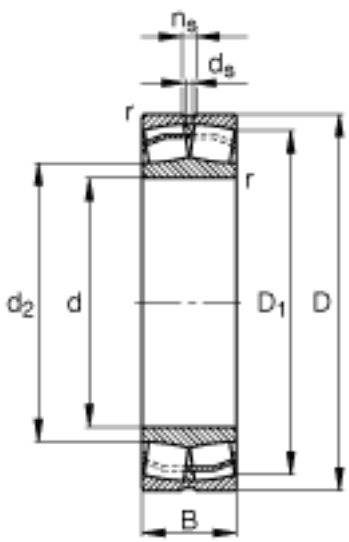
n_s
d_s
r
r
d_2
d
D_1
D
B

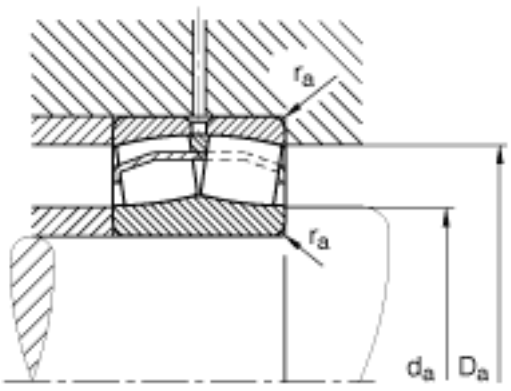
r_a
r_a
d_a
D_a