PN7514

Pressure sensor with display

PN-016-REG14-QFRKG/US/ /V

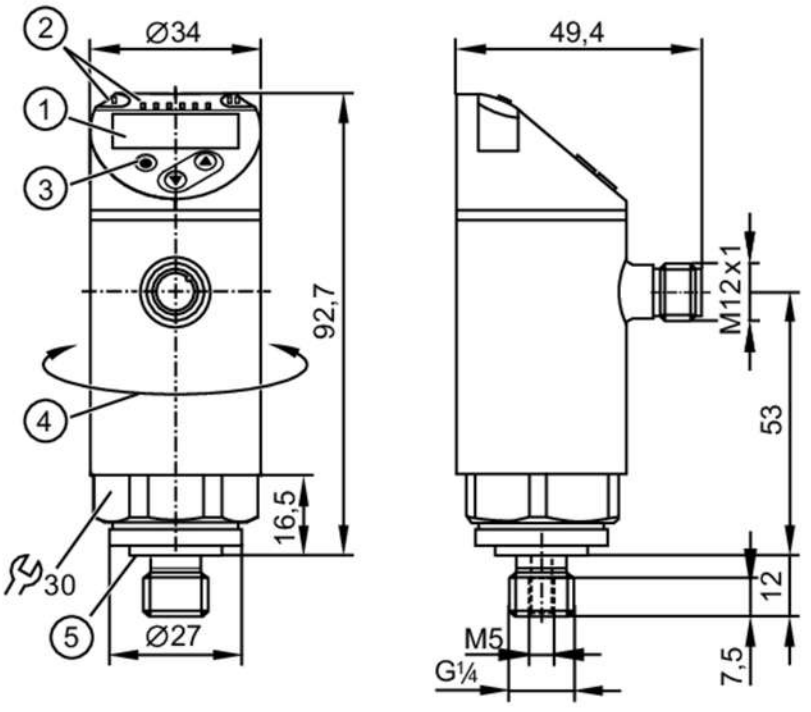

1 alphanumeric display 4-digit red/green
2 LEDs Display unit / switching status
3 programming button
4 upper part of the housing can be rotated 345°
5 Sealing

Product characteristics			
Number of inputs and outputs	Number of digital outputs: 2		
Measuring range	-1...16 bar	-14.6...232 psi	-0.1...1.6 MPa
Process connection	threaded connection G 1/4 external thread internal thread:M5		
Application			
Special feature	Gold-plated contacts		
Measuring element	ceramic-capacitive pressure measuring cell		
Application	for industrial applications		
Media	liquids and gases		
Medium temperature [°C]	-25...80		
Min. bursting pressure	150 bar	2200 psi	15 MPa
Pressure rating	85 bar	1250 psi	8.5 MPa
Vacuum resistance	-1000 mbar	-0.1 MPa	
Type of pressure	relative pressure; vacuum		
Electrical data			
Operating voltage [V]	18...30 DC; (to SELV/PELV)		
Current consumption [mA]	< 35		
Min. insulation resistance [MΩ]	100; (500 V DC)		
Protection class	III		
Reverse polarity protection	yes		

PN7514

Pressure sensor with display

PN-016-REG14-QFRKG/US/ /V

Power-on delay time	[s]	< 0.3		
Integrated watchdog		yes		
Inputs / outputs				
Number of inputs and outputs		Number of digital outputs: 2		
Outputs				
Total number of outputs		2		
Output signal		switching signal; IO-Link; (configurable)		
Electrical design		PNP/NPN		
Number of digital outputs		2		
Output function		normally open / normally closed; (parameterisable)		
Max. voltage drop switching output DC	[V]	2.5		
Permanent current rating of switching output DC	[mA]	150; (200 (...60 °C) 250 (...40 °C))		
Switching frequency DC	[Hz]	< 170		
Short-circuit protection		yes		
Type of short-circuit protection		pulsed		
Overload protection		yes		
Measuring/setting range				
Measuring range		-1...16 bar	-14.6...232 psi	-0.1...1.6 MPa
Set point SP		-0.87...16 bar	-12.6...232.1 psi	-0.087...1.6 MPa
Reset point rP		-0.95...15.92 bar	-13.8...230.9 psi	-0.095...1.592 MPa
Min. difference between SP and rP		0.08 bar	1.2 psi	0.008 MPa
In steps of		0.01 bar	0.1 psi	0.001 MPa
Accuracy / deviations				
Switch point accuracy	[% of the span]	< ± 0,5		
Repeatability	[% of the span]	< ± 0,1; (with temperature fluctuations < 10 K)		
Characteristics deviation	[% of the span]	< ± 0,25 (BFSL) / < ± 0,5 (LS); (BFSL = Best Fit Straight Line; LS = limit value setting)		
Hysteresis deviation	[% of the span]	< ± 0,25		
Long-term stability	[% of the span]	< ± 0,05; (per 6 months)		
Temperature coefficient zero point	[% of the span / 10 K]	< ± 0,2; (0...80 °C)		
Temperature coefficient span	[% of the span / 10 K]	< ± 0,2; (0...80 °C)		
Response times				
Response time	[ms]	< 3		
Delay time programmable dS, dr	[s]	0...50		
Damping process value dAP	[s]	0...4		

PN7514

Pressure sensor with display

PN-016-REG14-QFRKG/US/ /V

Software / programming			
Parameter setting options		hysteresis / window; normally open / normally closed; switching logic; switch-on/switch-off delay; Damping; Display unit	
Interfaces			
Communication interface		IO-Link	
Transmission type		COM2 (38,4 kBaud)	
IO-Link revision		1.1	
SDCI standard		IEC 61131-9	
Profiles		Smart Sensor ED2: Digital Measuring Sensor (0x000A), Identification and Diagnosis (0x4000)	
SIO mode		yes	
Required master port type		A; (when pin 2 not connected: B)	
Min. process cycle time	[ms]	3	
IO-Link resolution pressure	[bar]	0.002	
IO-Link process data (cyclical)		**function**	**bit length**
		pressure	16
		device status	4
		binary switching information	2
IO-Link functions (acyclical)		application specific tag	
Supported DeviceIDs		**Type of operation**	**DeviceID**
		default	1197
Note		For further information please see the IODD PDF file under "Downloads"	
Operating conditions			
Ambient temperature	[°C]	-25...80	
Storage temperature	[°C]	-40...100	
Protection		IP 65; IP 67	
Tests / approvals			
EMC		DIN EN 61000-6-2	
		DIN EN 61000-6-3	
Shock resistance		DIN EN 60068-2-27	50 g (11 ms)
Vibration resistance		DIN EN 60068-2-6	20 g (10...2000 Hz)
MTTF	[years]	249	
UL approval		UL Approval no.	J001
		File number UL	E174189
Pressure Equipment Directive		Sound engineering practice; can be used for group 2 fluids; group 1 fluids on request	
Mechanical data			
Weight	[g]	268	
Materials		stainless steel (316L/1.4404); PBT+PC-GF30; PBT-GF20; PC	
Materials (wetted parts)		stainless steel (316L/1.4404); Al2O3 (ceramics); FKM	
Min. pressure cycles		100 million	
Tightening torque	[Nm]	25...35; (recommended tightening torque; depends on lubrication, seal and pressure rating)	
Process connection		threaded connection G 1/4 external thread internal thread:M5	
Restrictor element integrated		no (can be retrofitted)	

PN7514

Pressure sensor with display

PN-016-REG14-QFRKG/US/ /V

Displays / operating elements		
Display	Display unit	3 x LED, green (bar, psi, MPa)
	switching status	2 x LED, yellow
	measured values	alphanumeric display, red/green 4-digit

Remarks	
Pack quantity	1 pcs.

Electrical connection

Connector: 1 x M12; coding: A; Contacts: gold-plated



Connection

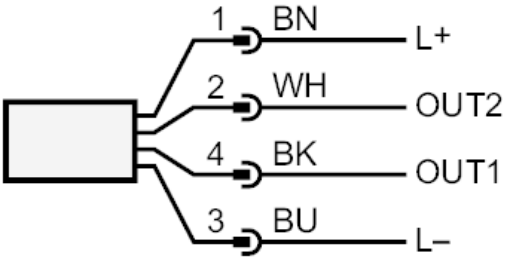

OUT1	switching output IO-Link
OUT2	switching output
	colours to DIN EN 60947-5-2
	Core colours :
BK =	black
BN =	brown
BU =	blue
WH =	white