# Product datasheet

Specifications



## inductive sensor XS7 40x40x117 - PBT - Sn15 mm - 24..240VAC/DC - terminals

XS7C4A1MPG13

## Main

| | |
|---|---|
| **Range of product** | Telemecanique Inductive proximity sensors XS |
| **Series name** | General purpose |
| **Sensor type** | Inductive proximity sensor |
| **Device application** | - |
| **Sensor name** | XS7 |
| **Sensor design** | Form 40 x 40 x 117 |
| **Size** | 117 mm |
| **Body type** | Fixed |
| **Detector flush mounting acceptance** | Flush mountable |
| **Material** | Plastic |
| **Enclosure material** | PBT |
| **Type of output signal** | Discrete |
| **Wiring technique** | 2-wire |
| **[Sn] nominal sensing distance** | 15 mm |
| **Discrete output function** | 1 NO or 1 NC programmable |
| **Output circuit type** | AC/DC |
| **Electrical connection** | Screw-clamp terminals, 4 x 1.5 mm² |
| **[Us] rated supply voltage** | 24...240 V AC 50/60 Hz<br>24...240 V DC |
| **Switching capacity in mA** | 5...200 mA DC<br>5...300 mA AC |
| **IP degree of protection** | IP67 conforming to IEC 60529<br>IP65 conforming to IEC 60529<br>IP69K conforming to DIN 40050 |

## Complementary

| | |
|---|---|
| **Detection face** | 5 positions turret head |
| **Front material** | PBT |
| **Operating zone** | 0…12 mm |
| **Differential travel** | 3...15% of Sr |
| **Repeat accuracy** | <= 3% of Sr |

Disclaimer: This documentation is not intended as a substitute for and is not to be used for determining suitability or reliability of these products for specific user applications

| | |
|---|---|
| **Cable entry number** | 1 tapped entry for Pg 13.5 cable gland |
| **Status LED** | Supply on: 1 LED (green)<br>Output state: 1 LED (yellow) |
| **Supply voltage limits** | 20…264 V AC/DC |
| **Maximum residual current** | 1.5 mA open state 120 V<br>0.6 mA open state 24 V |
| **Switching frequency** | <= 25 Hz AC<br><= 50 Hz DC |
| **Maximum voltage drop** | <5.5 V (closed) |
| **Maximum delay first up** | 7.5 ms |
| **Maximum delay response** | 1.2 ms |
| **Maximum delay recovery** | 1.8 ms |
| **Marking** | CE |
| **Height** | 40 mm |
| **Length** | 40 mm |
| **Width** | 117 mm |
| **Net weight** | 0.244 kg |

## Environment

| | |
|---|---|
| **Product certifications** | UL<br>CSA<br>CCC |
| **Ambient air temperature for operation** | -25…70 °C |
| **Ambient air temperature for storage** | -40…85 °C |
| **Vibration resistance** | 25 gn amplitude = +/- 2 mm (f = 10…55 Hz) conforming to IEC 60068-2-6 |
| **Shock resistance** | 50 gn for 11 ms conforming to EN 60068-2-27 |

## Packing Units

| | |
|---|---|
| **Unit Type of Package 1** | PCE |
| **Number of Units in Package 1** | 1 |
| **Package 1 Weight** | 244.0 g |
| **Package 1 Height** | 4.5 cm |
| **Package 1 width** | 4.5 cm |
| **Package 1 Length** | 14.5 cm |
| **Unit Type of Package 2** | S02 |
| **Number of Units in Package 2** | 28 |
| **Package 2 Weight** | 7.272 kg |
| **Package 2 Height** | 15 cm |
| **Package 2 width** | 30 cm |
| **Package 2 Length** | 40 cm |
| **Unit Type of Package 3** | P06 |
| **Number of Units in Package 3** | 448 |
| **Package 3 Weight** | 125.092 kg |
| **Package 3 Height** | 77 cm |
| **Package 3 width** | 80 cm |

| | |
|---|---|
| **Package 3 Length** | 60 cm |

## Offer Sustainability

| | |
|---|---|
| **EU RoHS Directive** | Pro-active compliance (Product out of EU RoHS legal scope)<br>EU RoHS Declaration |
| **Mercury free** | Yes |
| **RoHS exemption information** | Yes |
| **Environmental Disclosure** | Product Environmental Profile |

## Contractual warranty

| | |
|---|---|
| **Warranty** | 18 months |

# Product datasheet XS7C4A1MPG13

Dimensions Drawings

## Dimensions

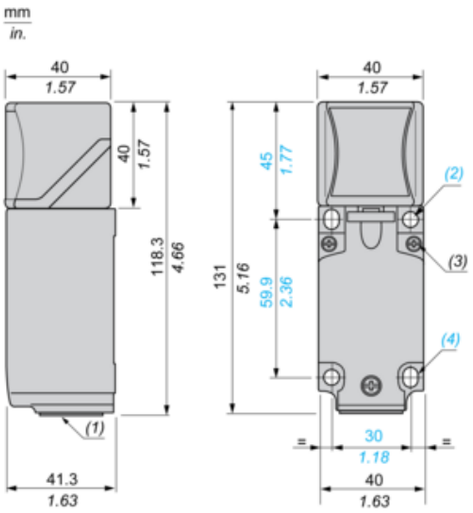


**(1) :** Pg 13.5 cable gland.

**(2) :** 2 holes Ø 5,45 mm / Ø 0.21 in. Tightening torque: < 1,5 Nm / < 13.3 lb-in.

**(3) :** 3 screws M3,5. Tightening torque: < 1,2 Nm / < 10.6 lb-in.

**(4) :** 2 alongated holes 5,4 x 7,4 mm / 0.21 x 0.29 in. Tightening torque: < 1,5 Nm / < 13.3 lb-in".

# Product datasheet XS7C4A1MPG13

Mounting and Clearance

## Mounting

### Head Positions

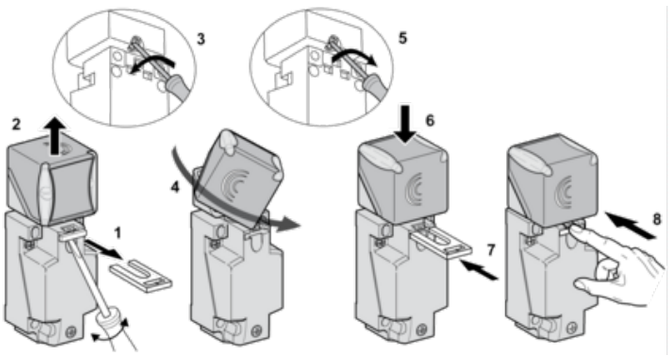

## Setting-up Precautions

### Minimum Mounting Distances (mm)

**Side by Side**

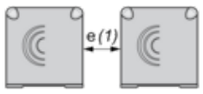


**e (1) ≥** 60

**Face to Face**

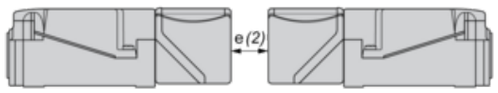


**e (2) ≥** 120

**Facing a Metal Object**

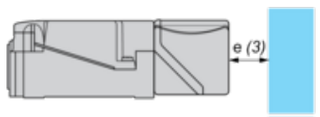


**e (3) ≥** 45

## Wiring Schemes

### 2-Wire AC or DC (Programmable)

