Miniature Basic Switch

VX

Compact Basic Switch of Ultralow Gram Operation Assures Yet Higher Contact Reliability

- Uses an internal hinge lever mechanism for ultralow gram operation and outstanding contact reliability.
- Shape is identical to that of the V-type compact Basic Switch.

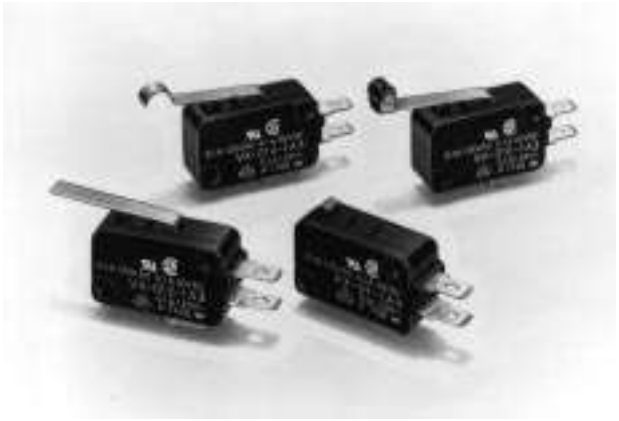

Ordering Information

Actuator	Connect terminal	OF max.	Model	
			5 A	0.1 A
Pin plunger	A	25 g	VX-5-1A2	VX-01-1A2
		50 g	VX-5-1A3	VX-01-1A3
	C2	25 g	VX-5-1C22	VX-01-1C22
		50 g	VX-5-1C23	VX-01-1C23
Short hinge lever	A	50 g	VX-51-1A3	VX-011-1A3
	C2	50 g	VX-51-1C23	VX-011-1C23
Hinge Lever	A	30 g	VX-52-1A3	VX-012-1A3
	C2	30 g	VX-52-1C23	VX-012-1C23
Long hinge lever	A	20 g	VX-53-1A3	VX-013-1A3
	C2	20 g	VX-53-1C23	VX-013-1C23
Simulated hinge lever	A	30 g	VX-54-1A3	VX-014-1A3
	C2	30 g	VX-54-1C23	VX-014-1C23
Short hinge roller lever	A	60 g	VX-55-1A3	VX-015-1A3
	C2	60 g	VX-55-1C23	VX-015-1C23
Hinge roller lever	A	30 g	VX-56-1A3	VX-016-1A3
	C2	30 g	VX-56-1C23	VX-016-1C23

Note: Connect terminal
A: solder/187 tab common terminal
C2: tab terminal (187)

Specifications

■ Ratings

Rated current	Rated voltage	Non-inductive load				Inductive laod				Inrush current
		Resistive load		Lamp load		Inductive load		Motor load		
		NC	NO	NC	NO	NC	NO	NC	NO	
5 A	**250 VAC**	5 A		0.5 A		4 A		---		Standard (VX-5): 15 A max.
	8 VDC	5 A		3 A		4 A		---		
	30 VDC	5 A		3 A		4 A		---		
	125 VDC	0.4 A		0.1 A		0.4 A		---		
	250 VDC	0.3 A		0.05 A		0.2 A		---		
0.1 A	**125 VAC**	0.1		---		---		---		
	8 VDC	0.1		---		---		---		
	30 VDC	0.1		---		---		---		

Note: 1. Inductive load has a power factor of 0.4 min. (AC) and a time constant of 7 ms max. (DC).
2. Lamp load has an inrush current of 10 times the steady-state current.
3. Motor load has an inrush current of 6 times the steady-state current.

Contact Form

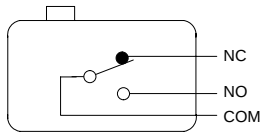

■ Characteristics

Item	VX-5	VX-01
Operating speed	0.1 mm to 1 m/s (at pin plunger)	
Operating frequency	Mechanical: 600 operations/min Electrical: 60 operations/min	
Insulation resistance	100 MΩ min. (at 500 VDC)	
Contact resistance	30 mΩ max. (initial value)	50 mΩ max. (initial value)
Dielectric strength	1,000 VAC, 50/60 Hz for 1 min between non-continuous terminals 1,500 VAC, 50/60 Hz for 1 min between each terminal and ground	
Vibration resistance (see note)	Malfunction: 10 to 55 Hz, 1.5-mm double amplitude	
Shock resistance (see note)	Destruction: 400 m/s^2 (approx. 40G) Malfunction: 100 m/s^2 (approx. 10G)	
Life expectancy	Mechanical: 50,000,000 operations min. Electrical: 500,000 operations min.	Mechanical: 10,000,000 operations min. Electrical: 1,000,000 operations min.
Ambient temperature	Operating: –25°C to 80°C (with no icing)	
Ambient humidity	Operating: 85% max.	
Weight	Approx. 6.2 g	

Note: The values are for pin plunger models.

■ Approved Standards

UL (File No. E32667)/CSA (File No. LR21642)
VDE (File No. 62420)

■ Operating Characteristics

Model	VX-5-1□2	VX-5-1□3	VX-01-1□2	VX-01-1□3	VX-51-1□3	VX-011-1□3
OF max.	0.25 N (25 gf)	0.49 N (50 gf)	0.25 N (25 gf)	0.49 N (50 gf)	0.49 N (50 gf)	0.49 N (50 gf)
RF max.	0.03 N (3 gf)	0.05 N (5 gf)	0.03 N (3 gf)	0.05 N (5 gf)	(0.04 N (4 gf))	(0.04 N (4 gf))
PT max.	1.2 mm	1.2 mm	1.2 mm	1.2 mm	1.6 mm	1.6 mm
OT min.	1.0 mm	1.0 mm	1.0 mm	1.0 mm	0.8 mm	0.8 mm
MD max.	0.3 mm	0.3 mm	0.3 mm	0.3 mm	0.5 mm	0.5 mm
OP	14.7±0.4 mm				15.2±0.5 mm	

Note: The values in the parentheses are reference value.

Model	VX-52-1□3	VX-012-1□3	VX-53-1□3	VX-013-1□3	VX-54-1□3	VX-014-1□3
OF max.	0.29 N (30 gf)	0.29 N (30 gf)	0.2 N (20 gf)	0.2 N (20 gf)	0.29 N (30 gf)	0.29 N (30 gf)
RF max.	---	---	---	---	---	---
PT max.	4 mm	4 mm	9 mm	9 mm	4 mm	4 mm
OT min.	1.6 mm	1.6 mm	3.2 mm	3.2 mm	1.6 mm	1.6 mm
MD max.	0.8 mm	0.8 mm	2 mm	2 mm	0.8 mm	0.8 mm
OP	15.2±1.2 mm		15.2±2.6 mm		18.7±1.2 mm	

Model	VX-55-1□3	VX-015-1□3	VX-56-1□3	VX-016-1□3
OF max.	0.59 N (60 gf)	0.59 N (60 gf)	0.29 N (30 gf)	0.29 N (30 gf)
RF max.	(0.04 N (4 gf))	(0.04 N (4 gf))	---	---
PT max.	1.6 mm	1.6 mm	4 mm	4 mm
OT min.	0.8 mm	0.8 mm	1.6 mm	1.6 mm
MD max.	0.5 mm	0.5 mm	0.8 mm	0.8 mm
OP	20.7±0.6 mm		20.7±1.2 mm	

Note: The values in the parentheses are reference value.

Engineering Data

Mechanical Life Expectancy

VX-5

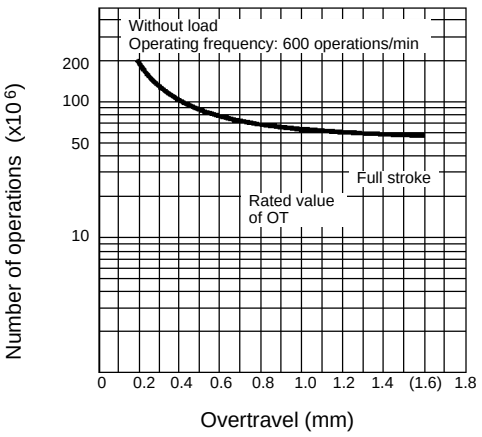

VX-01A

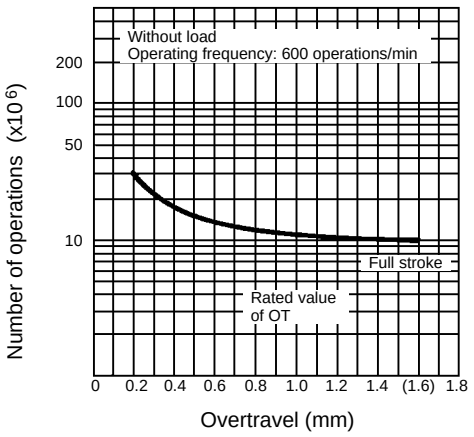

Electrical Life Expectancy

VX-5

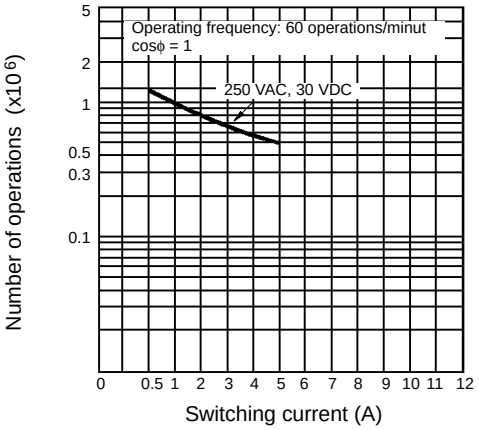

VX-01A

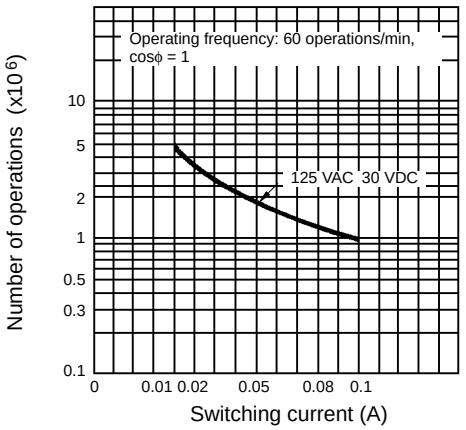

Dimensions

Note: 1. All units are in millimeters unless otherwise indicated.
2. Unless otherwise specified, a tolerance of ±0.4 mm applies to all dimensions.
3. Alphabets and numbers depend on the type of terminal are put on □ in the model number.
A: Solder/quick connect common terminal (187)
C2: Quick connect terminal (187)

Pin Plunger

VX-5-1□2
VX-5-1□3
VX-01-1□2
VX-01-1□3

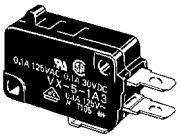

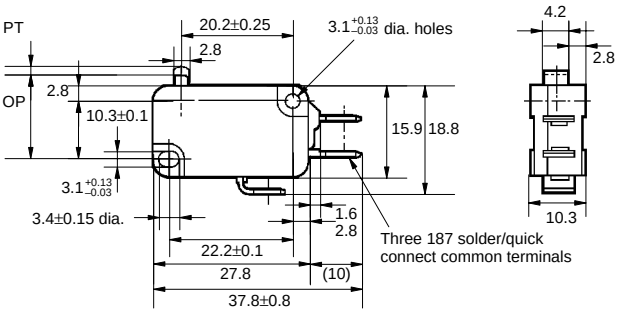

Short Hinge Lever

VX-51-1□3
VX-011-1□3

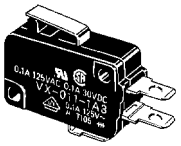

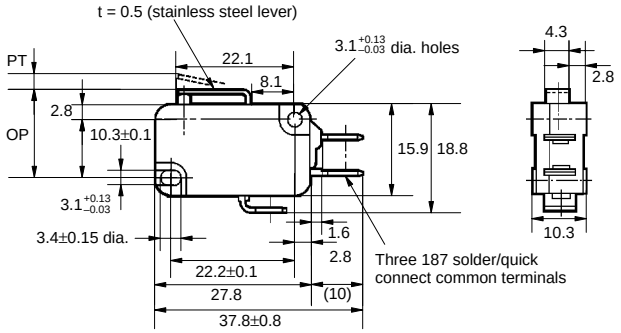

Hinge Lever

VX-52-1□3
VX-012-1□3

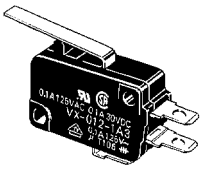

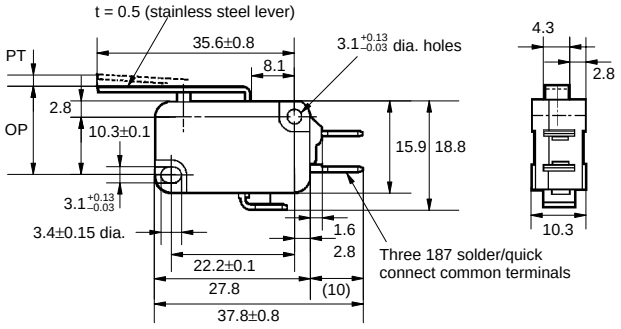

Long Hinge Lever

VX-53-1□3
VX-013-1□3

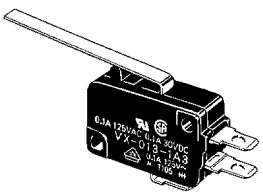

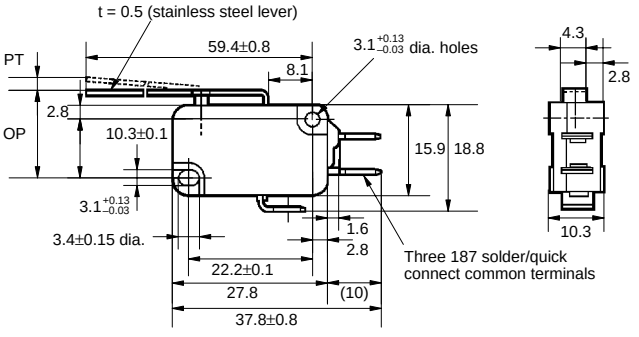

Simulated Hinge Lever

VX-54-1□3
VX-014-1□3

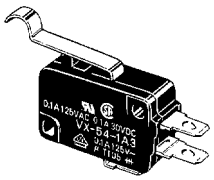

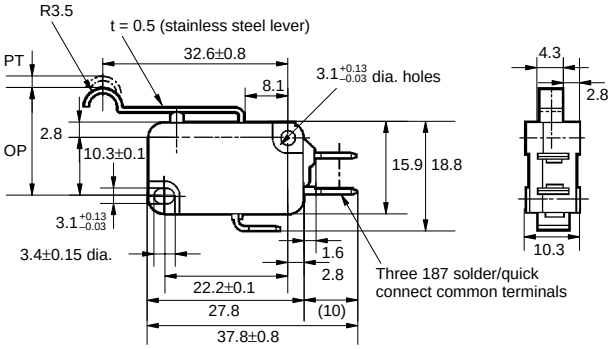

Short Hinge Roller Lever

VX-55-1□3
VX-015-1□3

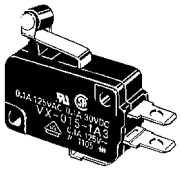

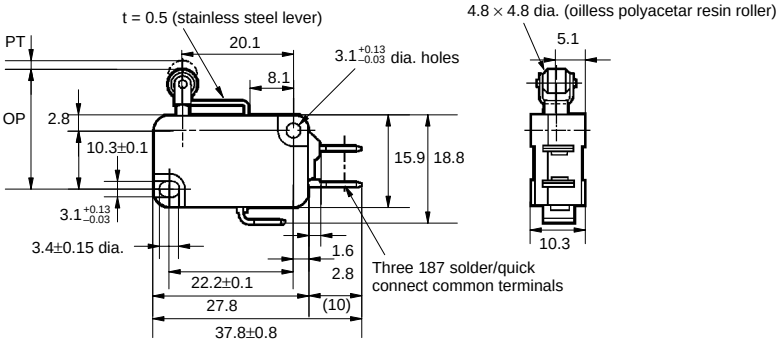

Hinge Roller Lever

VX-56-1□3
VX-016-1□3

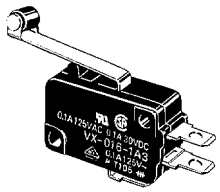

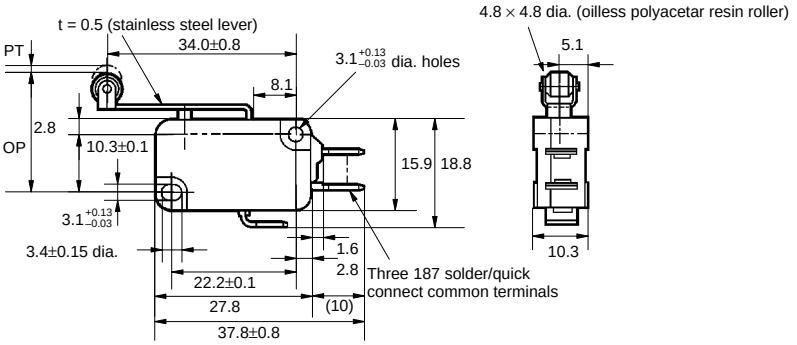

■ Terminals

Terminal	Solder/quick connect common terminal (187) (A terminal)	Quick connect terminal (187) (C2 terminal)
Bottom terminal	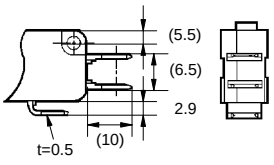 Three 187 solder/quick connect common terminal	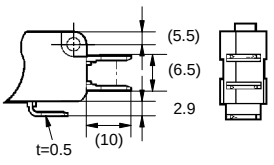 Three 187 quick connect terminal
Terminal position	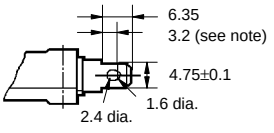 **Note:** The length to the center of the 1.6 dia. holes.	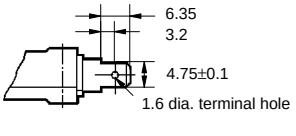

Precautions

Mounting

Use two M3 mounting screws with spring washers to mount the switch. Tighten the screws to a torque of 0.39 to 5.84 N • m (4 to 6 kg • cm).

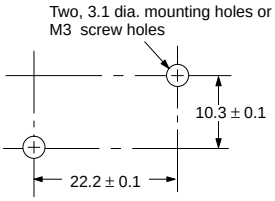

When soldering a lead wire to a terminal of the VX, use a soldering iron with a maximum capacity of 60 W and do not take more than 5 s to solder the lead wire, otherwise the characteristics of the VX may be altered.

When mounting, make sure there is sufficient insulation distance between the switch and its mounting panel. if it is insufficient, install an insulation guard or separator. Always install an insulation guard or separator when mounting the microswitch on a metallic body. Contact your OMRON representative for information about insulation guards and separators.

Operation

Keep the operation control completely separate from the actuator of the switch, and push it down fully when starting operation. Do not displace the operating position of the actuator when machining.

Consult OMRON in advance if the operating speed is to be extremely slow, or if the pushbutton is to be set somewhere between the free position and operating position.
Mount pin pushbutton switches so the stroke of the pushbutton and the stroke of the operating control overlap on a vertical line. The stroke of the switch, after operation, should be set to 60% to 90% that of standard OT (MIN indication).

Switch Protection

Do not use where there are toxic gases (such as near an oil-burning stove), nor in a dusty or humid environment.
Depending on environmental conditions, the switch should be rechecked about 3 to 6 months after it has been assembled.

ALL DIMENSIONS SHOWN ARE IN MILLIMETERS.
To convert millimeters into inches, multiply by 0.03937. To convert grams into ounces, multiply by 0.03527.

Cat. No. B39-E1-1