T-Splitters

BCC M415-M313-M313-U0014-000
Order Code: BCC09JC

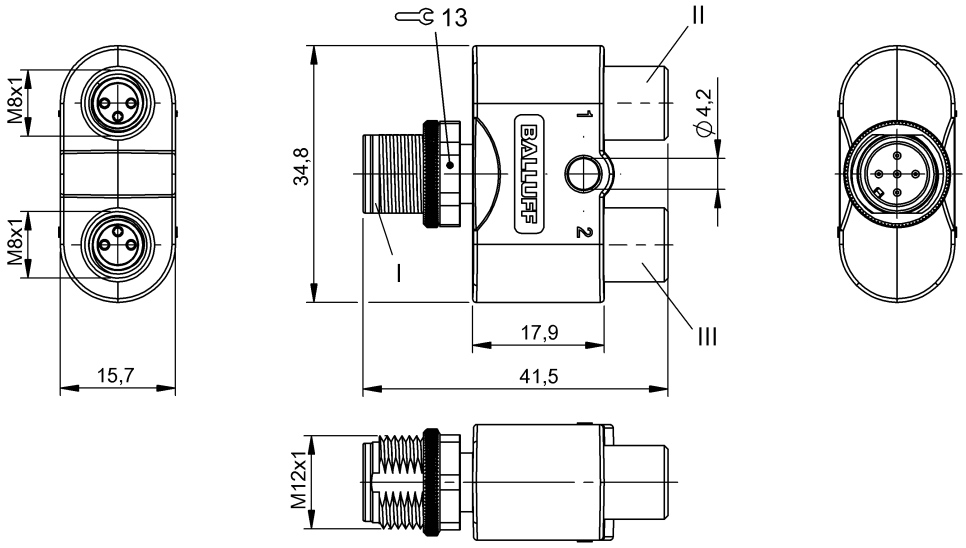

Basic features

Approval/Conformity	EAC WEEE

Electrical connection

Connection 1	M12x1-Male, 4-pin, A-coded
Connection 2	M8x1-Female, 3-pin, A-coded
Connection 3	M8x1-Female, 3-pin, A-coded
Number of pins	4/3/3

Electrical data

Operating voltage Ub	60 VDC / 60 VAC
Rated current (40 °C)	3.0 A

Environmental conditions

Ambient temperature	-25...80 °C
IP rating	IP67

Material

Material contacts	Copper alloy, gold plated/Copper alloy, gold plated/Copper alloy, gold plated
Material cover nut	Brass nickel-plated
Material grip	PA 6.6 GF

Mechanical data

Tightening torque pigtail	0.6 Nm/-/-

Remarks

Enclosure rating per IEC 60529, only in screwed state with the associated mating piece.

Connector Drawings

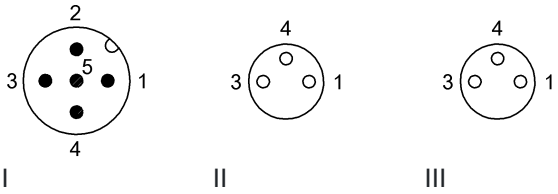

BCC M415-M313-M313-U0014-000
Order Code: BCC09JC

Wiring Diagrams

