DATASHEET - DIULEEM/21/MV(230V50HZ,240V60HZ)



Reversing contactor combination, 380 V 400 V: 3 kW, 230 V 50 Hz, 240 V 60 Hz, AC operation

Powering Business Worldwide

Part no.	**DIULEEM/21/MV(230V50HZ,240V60HZ)**
Catalog No.	**051664**
Alternate Catalog No.	**XTMR6A21F**

Delivery program

Product range			Contactor combinations
Application			Contactor combinations for starting motors with two directions of rotation
Accessories			DIUL reversing combinations
Utilization category			NAC-3: Normal AC induction motors: starting, switch off during running AC-4: Normal AC induction motors: starting, plugging, reversing, inching
			IE3
Notes			Also suitable for motors with efficiency class IE3.
Rated operational current			
AC-3			
380 V 400 V	I_e	A	6.6
Max. rating for three-phase motors, 50 - 60 Hz			
AC-3			
220 V 230 V	P	kW	1.5
380 V 400 V	P	kW	3
660 V 690 V	P	kW	3
AC-4			
220 V 230 V	P	kW	1.1
380 V 400 V	P	kW	2.2
660 V 690 V	P	kW	2.2
Actuating voltage			230 V 50 Hz, 240 V 60 Hz
Voltage AC/DC			AC operation
Individual components of the combination			
Contactor Q11 DILEEM-10 + 11DILEM			
Contactor Q12 DILEEM-10 + 11DILEM			
Spare auxiliary contacts			

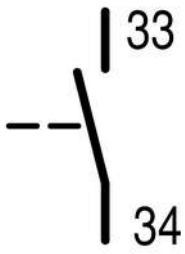

Q11

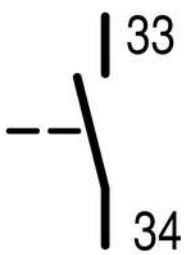

Q12

Mechanical interlock +			
Circuit diagram			

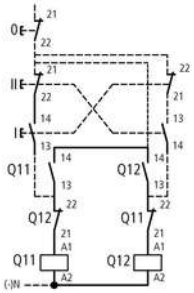

Contact sequence

Design verification as per IEC/EN 61439

Technical data for design verification			
Rated operational current for specified heat dissipation	I_n	A	6
Heat dissipation per pole, current-dependent	P_{vid}	W	0.36
Equipment heat dissipation, current-dependent	P_{vid}	W	1.08
Static heat dissipation, non-current-dependent	P_{vs}	W	1.8
Heat dissipation capacity	P_{diss}	W	0
Operating ambient temperature min.		°C	-25
Operating ambient temperature max.		°C	50
IEC/EN 61439 design verification			
10.2 Strength of materials and parts			
10.2.2 Corrosion resistance			Meets the product standard's requirements.
10.2.3.1 Verification of thermal stability of enclosures			Meets the product standard's requirements.
10.2.3.2 Verification of resistance of insulating materials to normal heat			Meets the product standard's requirements.
10.2.3.3 Verification of resistance of insulating materials to abnormal heat and fire due to internal electric effects			Meets the product standard's requirements.
10.2.4 Resistance to ultra-violet (UV) radiation			Meets the product standard's requirements.
10.2.5 Lifting			Does not apply, since the entire switchgear needs to be evaluated.
10.2.6 Mechanical impact			Does not apply, since the entire switchgear needs to be evaluated.
10.2.7 Inscriptions			Meets the product standard's requirements.
10.3 Degree of protection of ASSEMBLIES			Does not apply, since the entire switchgear needs to be evaluated.
10.4 Clearances and creepage distances			Meets the product standard's requirements.
10.5 Protection against electric shock			Does not apply, since the entire switchgear needs to be evaluated.
10.6 Incorporation of switching devices and components			Does not apply, since the entire switchgear needs to be evaluated.
10.7 Internal electrical circuits and connections			Is the panel builder's responsibility.
10.8 Connections for external conductors			Is the panel builder's responsibility.
10.9 Insulation properties			
10.9.2 Power-frequency electric strength			Is the panel builder's responsibility.
10.9.3 Impulse withstand voltage			Is the panel builder's responsibility.
10.9.4 Testing of enclosures made of insulating material			Is the panel builder's responsibility.
10.10 Temperature rise			The panel builder is responsible for the temperature rise calculation. Eaton will provide heat dissipation data for the devices.
10.11 Short-circuit rating			Is the panel builder's responsibility. The specifications for the switchgear must be observed.
10.12 Electromagnetic compatibility			Is the panel builder's responsibility. The specifications for the switchgear must be observed.
10.13 Mechanical function			The device meets the requirements, provided the information in the instruction leaflet (IL) is observed.

Technical data ETIM 8.0

Low-voltage industrial components (EG000017) / Combination of contactors (EC000010)			
Electric engineering, automation, process control engineering / Low-voltage switch technology / Contactor (LV) / Combination of contactor (ecl@ss10.0.1-27-37-10-09 [AGZ572014])			
Function			Reversing contactor
Rated control supply voltage Us at AC 50HZ		V	230 - 230
Rated control supply voltage Us at AC 60HZ		V	240 - 240
Rated control supply voltage Us at DC		V	0 - 0
Voltage type for actuating			AC
Rated operation current Ie at AC-1, 400 V		A	6.6

Rated operation current Ie at AC-3, 400 V	A	6.6
Rated operation power at AC-3, 400 V	kW	3
Rated operation power NEMA	kW	2.2
Number of normally closed contacts as main contact		0
Number of normally open contacts as main contact		6
Type of electrical connection for auxiliary- and control current circuit		Screw connection
Type of electrical connection of main circuit		Screw connection
Degree of protection (IP)		IP20
Degree of protection (NEMA)		Other
Rail mounting possible		Yes

Approvals

Product Standards	IEC/EN 60947-4-1; UL 508; CSA-C22.2 No. 14-05; CE marking
UL File No.	E29096
UL Category Control No.	NLDX
CSA File No.	012528
CSA Class No.	3211-04
North America Certification	UL listed, CSA certified
Specially designed for North America	No

Characteristics

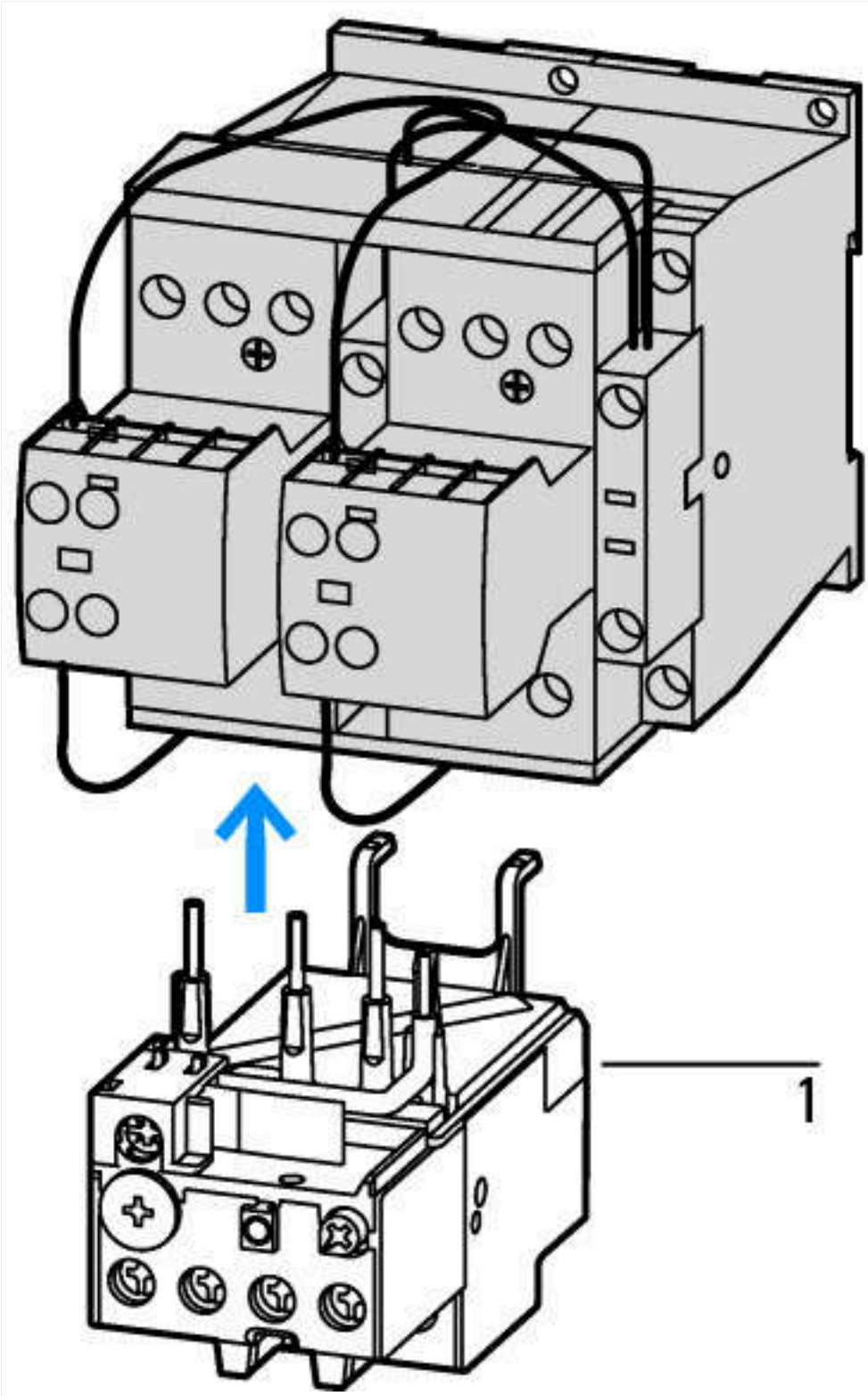

1: Overload relay

Dimensions

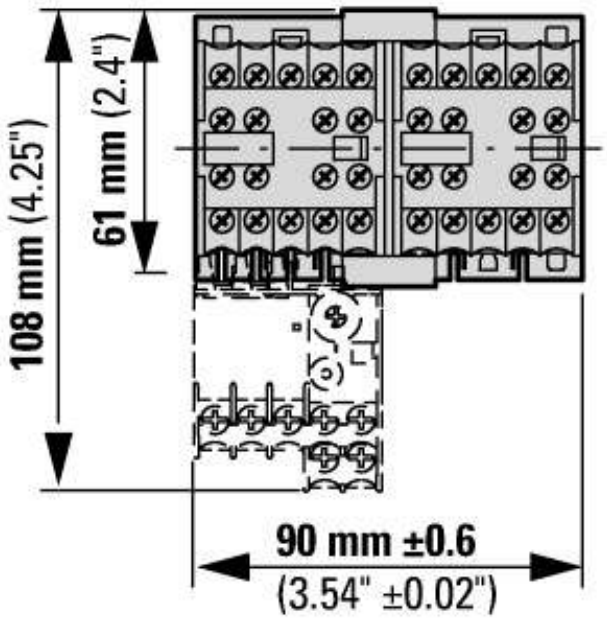

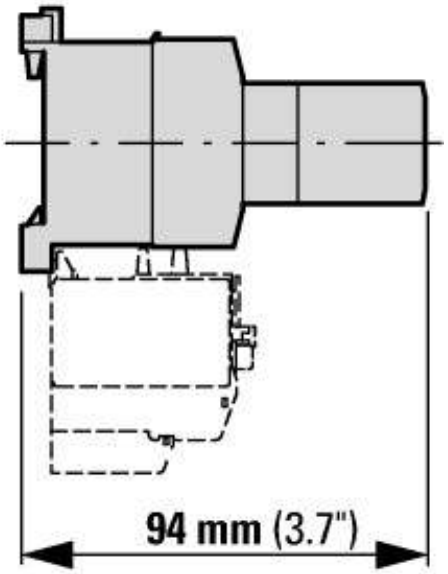

Additional product information (links)

IL03407067Z (AWA2120-1049) Reversing combination	
IL03407067Z (AWA2120-1049) Reversing combination	https://es-assets.eaton.com/DOCUMENTATION/AWA_INSTRUCTIONS/IL03407067Z2021_09.pdf

© 07/2022 by Eaton Industries GmbH