Datasheet - AZM 170SK-11/11ZRK-2197 24 VAC/DC

Solenoid interlock / AZM 170



(Minor differences between the printed image and the original product may exist!)

- thermoplastic enclosure
- Double-insulated
- Compact design
- 90 mm x 84 mm x 30 mm
- 1 Cable entry M 20 x 1.5
- Interlock with protection against incorrect locking.
- Long life
- High holding force
- Manual release from side
- Cut clamp termination

Ordering details

Product type description	AZM 170SK-11/11ZRK-2197 24 VAC/DC
Article number	1179710
EAN code	4030661312798

Classification

Standards	EN ISO 13849-1
B_{10d} Opener (NC)	2.000.000
Mission time	20 Years
notice	$MTTF_d = \frac{B_{10d}}{0,1 \times n_{op}}$ $n_{op} = \frac{d_{op} \times h_{op} \times 3600\ s/h}{t_{cycle}}$

Global Properties

Product name	AZM 170
Standards	EN 60947-5-1, BG-GS-ET-19
Compliance with the Directives (Y/N) CE	Yes
Number of actuating directions	2 piece
Active principle	electromechanical

Duty cycle	Magnet 100 %
Materials	
- Material of the housings	Plastic, glass-fibre reinforced thermoplastic, self-extinguishing
- Material of the contacts	Silver
Housing coating	None
Weight	315 g

Mechanical data

Design of electrical connection	Screw terminals
Cable section	
- Min. Cable section	1 x 0,75 mm²
- Max. Cable section	1 x 1.5 mm², flexible
Mechanical life	> 1.000.000 operations
Emergency unlocking device (Y/N)	No
Manual release (Y/N)	Yes
- right	
Emergency release (Y/N)	No
Latching force	30 N
Positive break force	8.5 N
positive break travel	11 mm
Clamping force F_{max}	1000 N
Max. Actuating speed	2 m/s

Ambient conditions

Ambient temperature	
- Min. environmental temperature	−25 °C
- Max. environmental temperature	+60 °C
Protection class	IP67 to IEC/EN 60529

Electrical data

Design of control element	Normally open contact (NO), Opener (NC)
Switching principle	Creep circuit element
Number of auxiliary contacts	2 piece
Number of safety contacts	2 piece
Power to unlock	Yes
Power to lock	No
Rated control voltage U_s	24 VAC/DC
Power consumption	max. 10 W
Rated impulse withstand voltage U_{imp}	4 kV
Rated insulation voltage U_i	250 V
Thermal test current I_{the}	10 A
Utilisation category	AC-15: 230 V / 4 A DC-13: 24 V / 4 A
Max. fuse rating	6 A gG D-fuse

ATEX

Explosion protection categories for gases	None
Explosion protected category for dusts	None

Miscellaneous data

Applications	sliding safety guard, removable guard, hinged safety guard

Dimensions

Dimensions of the sensor	
- Width of sensor	108 mm
- Height of sensor	100.5 mm
- Length of sensor	30 mm

notice

Individual coding available on request

Manual release from side

- For manual release using M5 triangular key, available as accessory
- Additional manual release on side

Diagram

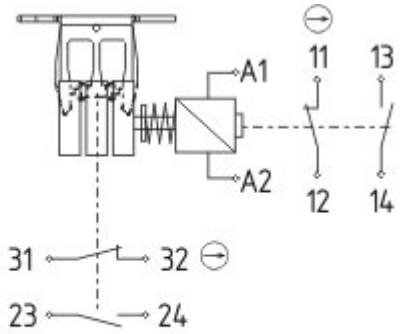

11	12	13	14		23	24	31	32		A1	A2

Note Diagram

positive break NC contact

active

no active

Normally-open contact

Normally-closed contact

Ordering suffix

The applicable ordering suffix is added at the end of the part number of the safety switch.
Order example: AZM 170SK-11/11ZRK-2197 24 VAC/DC**-1637**

...**-1637**	0,3 µm gold-plated contacts

Ordering code

AZM 170**(1)**-**(2)**Z**(3)**K**(4)**-**(5)**-**(6)**-**(7)**

(1)

without	IDC method of termination
SK	Screw connection

(2)

11	1 Normally open contact (NO) / 1 Opener (NC)
02	2 Opener (NC)
12/0.0	1 Normally open contact (NO), 2 Opener (NC) / -

(3)

without	Latching force 5 N
R	Latching force 30 N
I	Individual coding

(4)

without	Power to unlock
A	Power to lock

(5)

without	cable gland
ST	Connector M12 x 1
ST-2431	Connector M12 x 1, Individual solenoid monitoring

(6)

24VAC/DC	U_s 24 VAC/DC
110VAC	U_s 110 VAC
230VAC	U_s 230 VAC

(7)

without	Manual release
2197	Manual release from side (Power to unlock)
1637	gold-plated contacts

AZM 170ST and AZM 170SK

AZM 170ST-(1)Z(2)K(3)-(4)-(5)-024
AZM 170SK-(1)Z(2)K(3)-(4)-(5)-024

(1)

11/11	1 Normally open contact (NO), 1 Opener (NC) / 1 Normally open contact (NO), 1 Opener (NC)
11/02	1 Normally open contact (NO), 1 Opener (NC) / 2 Opener (NC)
12/00	1 Normally open contact (NO), 2 Opener (NC) / -
12/11	1 Normally open contact (NO), 2 Opener (NC) / 1 Normally open contact (NO), 1 Opener (NC)

12/02	1 Normally open contact (NO), 2 Opener (NC) / 2 Opener (NC)
02/01	2 Opener (NC), - / 1 Opener (NC), -
02/10	2 Opener (NC), - / 1 Normally open contact (NO), -

(2)

without	Latching force 5 N
R	Latching force 30 N

(3)

without	Power to unlock
A	Power to lock

(4)

1637	gold-plated contacts

(5)

2197	Manual release for Power to unlock

Images

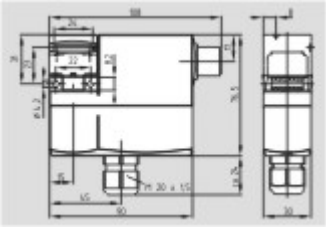

Dimensional drawing (basic component)

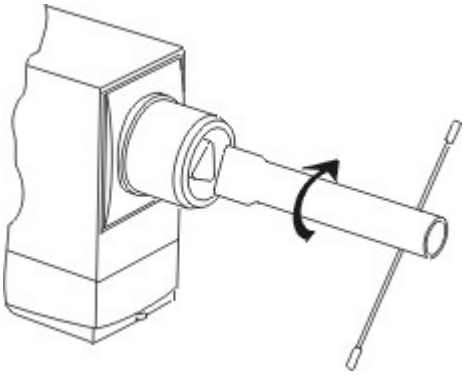

Detail photo

System components

Actuator



1122893 - AZ 17/170-B1

• Particularly suitable for sliding doors



1137406 - AZ 17/170-B1-2245

• Damps vibration on guard device

1122895 - AZ 17/170-B5

• Particularly suitable for hinged guards (front mounting)





1139788 - AZ 17/170-B11

• Particularly suitable for sliding doors



1139789 - AZ 17/170-B15

• Particularly suitable for hinged guards (front mounting)



1123391 - AZM 170-B6

• For very smal actuating radii
• The direction of actuation can be selected by applicable insertion of the insert

Accessories

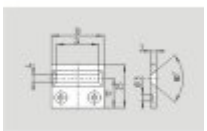

1208493 - AZM 170-B CENTERING GUIDE

• for AZ 17 and AZM 170



1100887 - TRIANGULAR KEY M5

• For manual release using M5 triangular key, available as accessory
• For maintenance, installation, etc.

Connector



A-K4M12

• Pre-wired cable
• 4-pole

S-K4M12

- Connector without cable
- 4-pole

K.A. Schmersal GmbH, Möddinghofe 30, D-42279 Wuppertal
The data and values have been checked throroughly. Technical modifications and errors excepted.
Generiert am 06.10.2011 - 10:20:42h Kasbase 1.5.5 DBI