INSTALLATION INSTRUCTION

Auxiliary contact

OA2G11



OA2G11

OT16-40F3

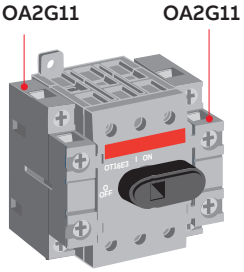

OT63-80F3

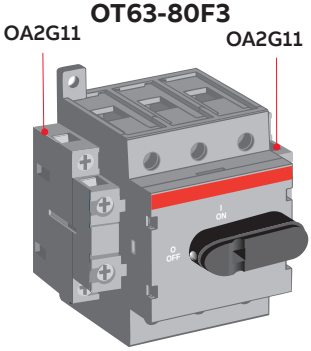

OT100-125F3

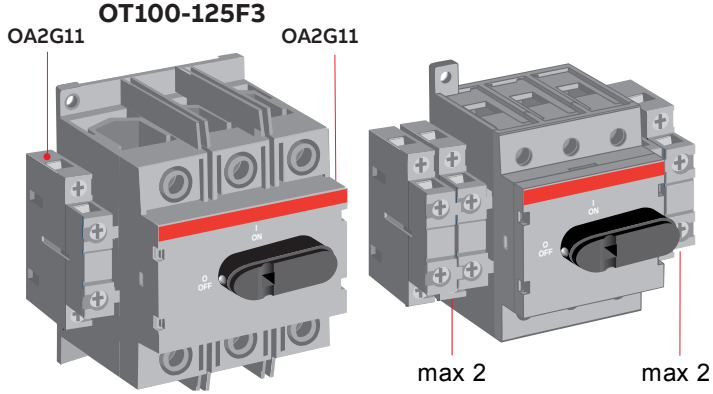

A06112

OA2G11

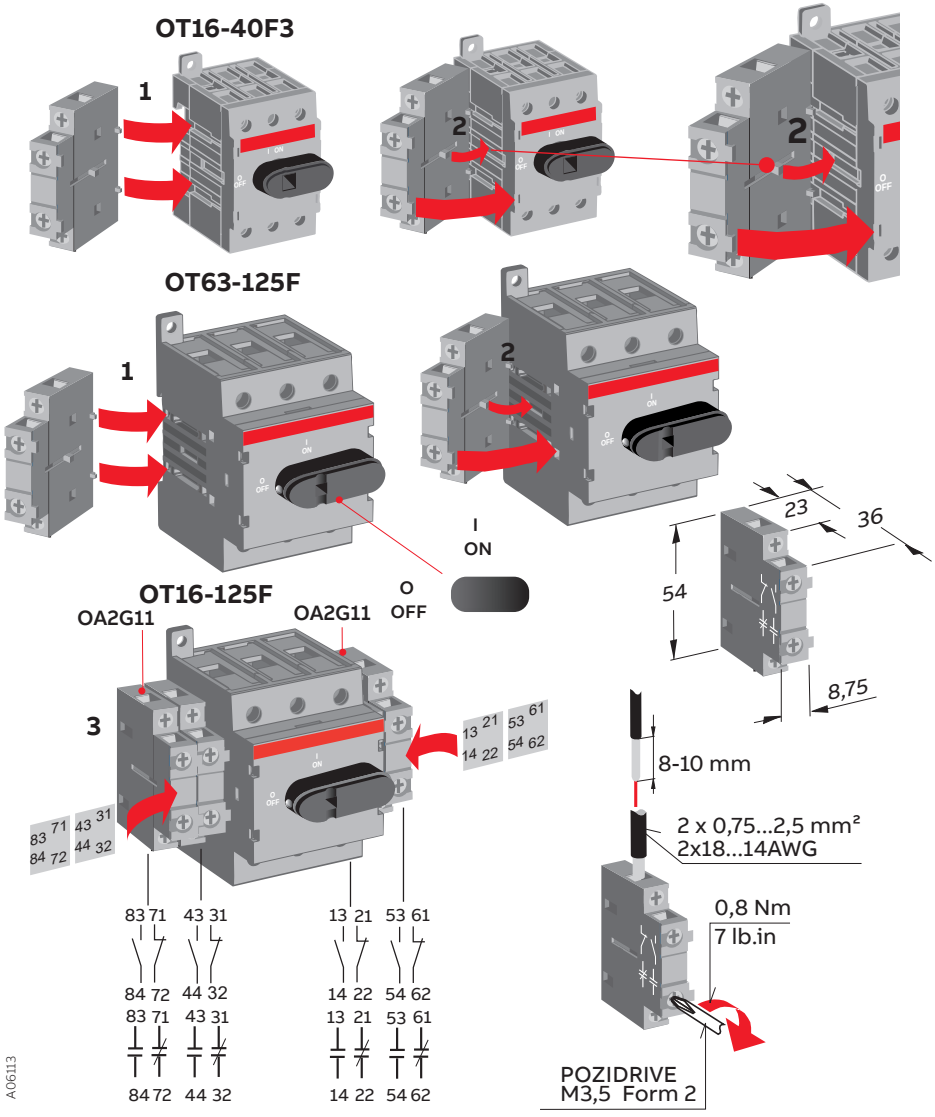
OT16-40F3
1
2
2
OT63-125F
1
2
I
ON
O
OFF
OT16-125F
OA2G11
OA2G11
3
83 71 43 31
84 72 44 32
13 21 53 61
14 22 54 62
83 71 43 31
84 72 44 32
83 71 43 31
84 72 44 32
13 21 53 61
14 22 54 62
13 21 53 61
14 22 54 62
23
36
54
8,75
8-10 mm
2 x 0,75...2,5 mm²
2x18...14AWG
0,8 Nm
7 lb.in
POZIDRIVE
M3,5 Form 2
A06113

Contact us

ABB Oy
P.O. Box 622
FI-65101 Vaasa
Finland

abb.com/lowvoltage

© Copyright 2021 ABB. All rights reserved.
Specifications subject to change without notice.

34 OA2G11 rev. G / 1SCC390013M0005 # 09.09.2021