Stainless Steel Round Cylinder, Series CSL-RD

R480651428

General series information
AVENTICS Series CSL-RD Stainless Steel Round Cylinders (ISO 6432)

- The AVENTICS Series CSL-RD (ISO 6432) cylinder is a stainless-steel round cylinder, configurable in three different designs: standard, hygienic and short. The Series CSL-RD (ISO 6432) has a smooth profile and low surface roughness made of stainless steel, NSF-H1 grease and FDA compliant seals it is suitable for food contact. In addition, the cylinders are certified in accordance with regulation (EC) No 1935/2004.



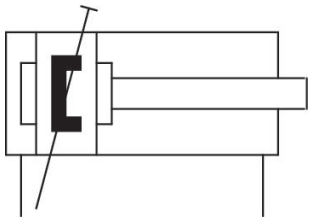

Technical data

Industry	Industrial
Standards	ISO 6432
Piston Ø	25 mm
Stroke	250 mm
Ports	G 1/8
Functional principle	Double-acting
Cushioning	Pneumatic pre-adjusted cushioning
Magnetic piston	Piston with magnet
Environmental requirements	Industry standard suitable for use in food processing ATEX optional
Piston rod	single
Cylinder special features	Version: hygienic design

Scraper	Heat-Resistant Scraper
Pressure for determining piston forces	6,3 bar
Retracting piston force	260 N
Extracting piston force	309 N
Min. ambient temperature	-20 °C
Max. ambient temperature	80 °C
Working pressure min.	1 bar
Working pressure max	10 bar
Piston rod thread	M10x1,25
Cushioning length	14 mm
Cushioning energy	1.9 J
Weight 0 mm stroke	0.082 kg
Weight +10 mm stroke	0.0055 kg
Stroke max.	1200 mm
Medium	Compressed air
Min. medium temperature	-20 °C
Max. medium temperature	80 °C
Max. particle size	50 µm
Oil content of compressed air min.	0 mg/m³
Oil content of compressed air max.	5 mg/m³
Clamping piece for magnetic field sensor necessary	Clamping piece for magnetic field sensor necessary

Material

Piston rod	Stainless Steel
Piston material	Aluminum
Scraper material	Thermoplastic polyurethane (TPU)
Material, front cover	Stainless Steel
Cylinder tube	Stainless Steel
End cover	Stainless Steel
Piston seal	Nitrile butadiene rubber
Nut for cylinder mounting	Stainless Steel
Nut for piston rod	Stainless Steel
Guide bushing	Plastic
Part No.	R480651428

Technical information

ATEX-certified cylinders with identification II 2G Ex h IIC T4 Gb / II 2D Ex h IIIC T135°C Db_X can be generated in the Internet configurator.

The operating temperature range for ATEX-certified cylinders is -20°C ... 60°C.

The pressure dew point must be at least 15 °C less than ambient and medium temperature and may not exceed 3 °C.

The oil content of compressed air must remain constant during the life cycle.

Use only the approved oils from AVENTICS. Further information can be found in the “Technical information” document (available in https://www.emerson.com/en-us/support).

Dimensions

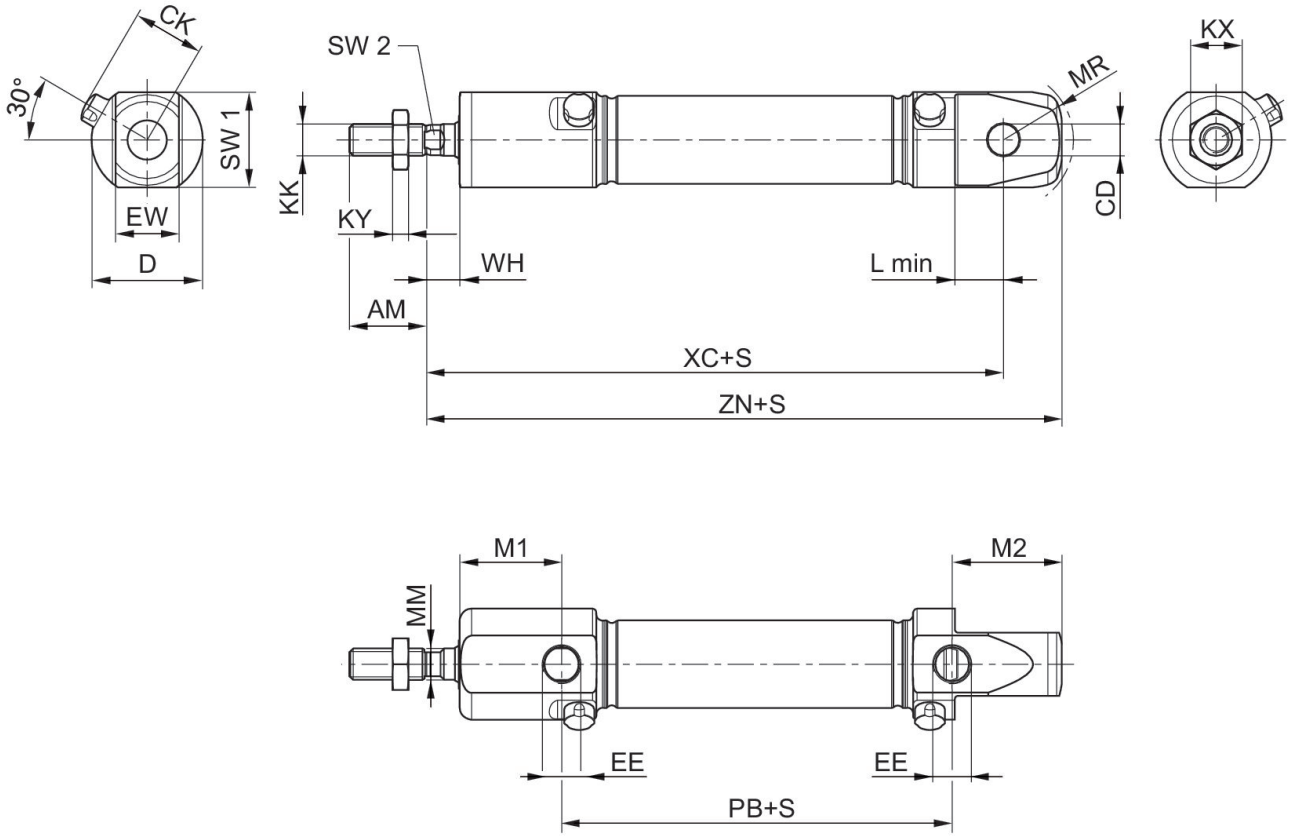

S = stroke

Piston Ø	AM–2	CD H9	CK	D	EE	EW d13	KK	KX	KY
16	16	6	14,7	22	M5	12	M6	10	3,2
20	20	8	17,9	28	G 1/8	16	M8	13	4
25	22	8	20,2	33	G 1/8	16	M10x1,25	17	5

Piston Ø	AM–2	CD H9	CK	D	EE	EW d13	KK	KX	KY
32	22	10	21,5	38	G 1/8	16	M10x1,25	17	5
40	24	12	27	49	G 1/4	18	M12x1,25	18	6

Piston Ø	L min	M1	M2	MM f8	MR	PB ±1	WH ±1,2	XC ±1	ZN ± 1
16	9	21,2	22,7	6	16	43,6	7,5	82	94,7
20	12	25,7	27,7	8	18	48,6	8	95	109,7
25	12	28,2	29,7	10	19	51,8	9,5	104	119,7
32	14	34,6	11,7	12		46	8,9	117,5	129,5
40	16	38	8,7	16		66	10,8	139,6	153,5

Piston Ø	SW 1	SW 2
16	20	5
20	24	6
25	28	8
32	35	10
40	45	13

Cushioning diagram

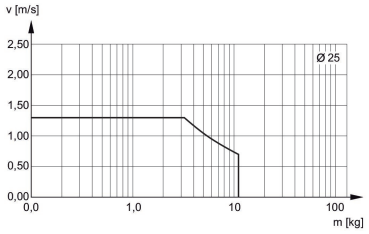

Overview drawing

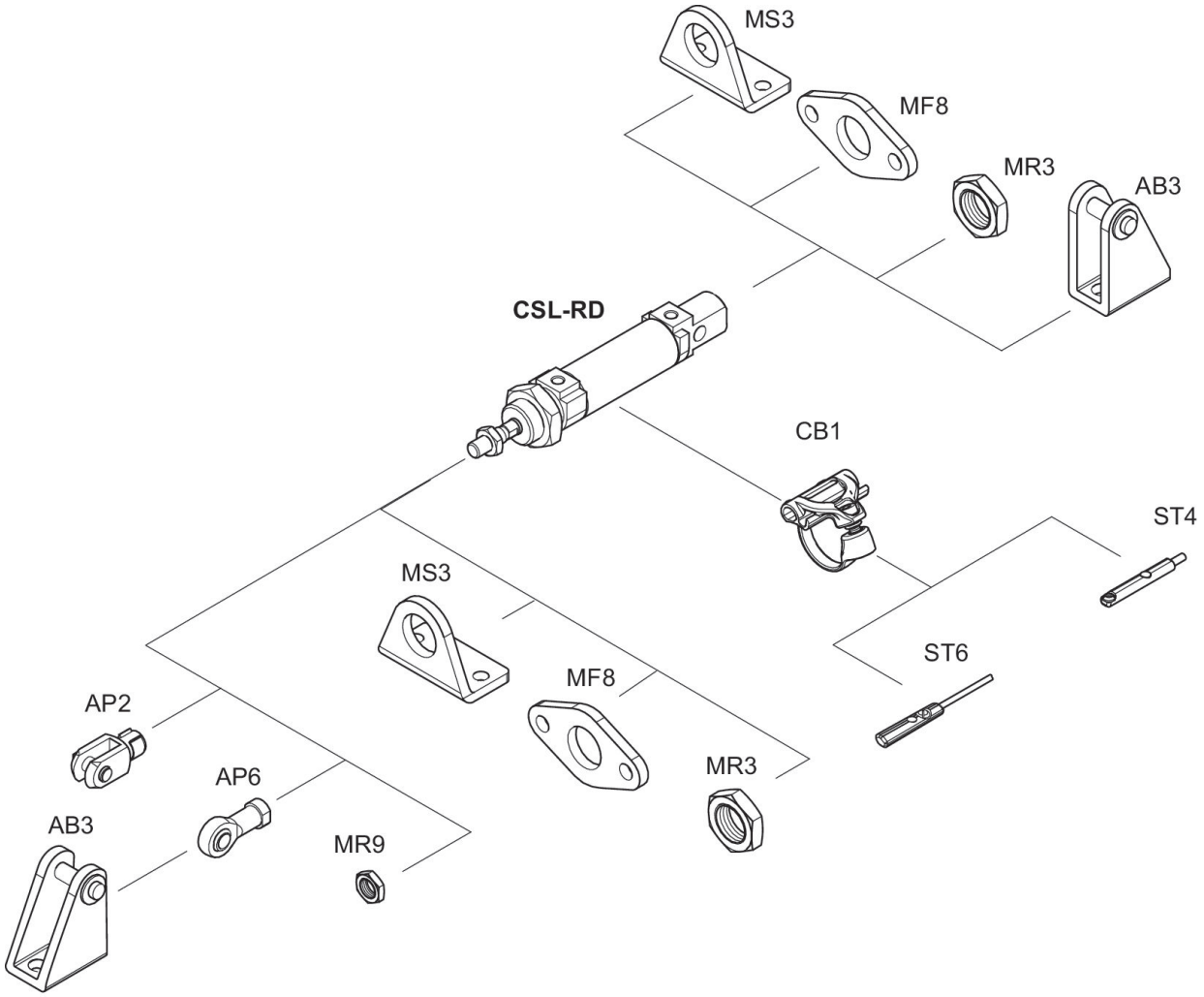

NOTE: This overview drawing is only for orientation to indicate where the various accessory parts can be fastened to the cylinder. The illustration has been simplified for this purpose. It is thus not possible to derive the dimensions from this overview.