CH Modular, IP20 finger-safe DIN-Rail holders for Class CC, supplemental and PV fuses

RoHS 2011/65/EU



Catalog symbol:

- CHCC_ (Class CC)
- CHM_ (UL® supplemental/IEC 10x38)
- CHPV_ (13/32 x 1-1/2 and 10x38 photovoltaic)

Description:

Eaton's Bussmann™ series CH DIN-Rail fuse holders are for UL Class CC and supplemental fuses, and IEC 10x38 fuses. They are available with and without indication in 1-, 2- and 3-pole IP20 finger-safe versions. A variety of accessories extends their application flexibility and they may be ganged together to meet specific application requirements.

For other Bussmann series CH fuse holders, please see the following data sheets.

Fuse class	Fuse size	Data sheet No.
Class J	30 and 60 A	2144
IEC	8 x 32 mm	720147
	14 x 51 mm	10080
	22 x 58 mm	10015

Specifications:

Ratings

- Volts
  - 600 V (or less) UL
  - 690 V (or less) IEC
  - 1000 Vdc (or less) photovoltaic (PV)
- Amps
  - 30 A UL
  - 32 A IEC
- Short-Circuit Current Rating (SCCR)
  - 33 kA photovoltaic
  - 200 kA RMS Sym. (CHCC, CHM*)

* CHM SCCR is fuse interrupting rating dependent.

Agency information

- CHCC - Class CC version: cULus Listed, File E14853, Guide IZLT
- CHM - Supplemental fuse version: UL Recognized, File E14853, Guide IZLT2
- CHPV - PV version: UL Listed, File E348242, Guide IZMR
- CSA® File 47235, CHPV and CHM - Class 6225-30
- IEC 60269-2 (CHM, CHPV)
- CCC
- RoHS compliant

Mounting

- 35 mm DIN-Rail

Wire range (see conductor table on page 3 for details)

- 75°C and 90°C Cu
- #18 to #4 (0.8 mm^2 to 21.1 mm^2)
  - Solid
  - Stranded
  - Fine stranded

Terminals

- Single or dual conductors
- Comb busbar
- Terminal screws
  - Standard phil-slot
  - Optional hex head (order by adding "-H" suffix to the catalog number, e.g., CHM1DU-H)

Flammability

- UL 94V0, self-extinguishing

Storage and operating temperature

- -4°F (-20°C) to 194°F (90°C) indicating
- -4°F (-20°C) to 248°F (120°C) non-indicating

Powering Business Worldwide

CH modular, IP20 finger-safe DIN-Rail holders for Class CC, supplemental and PV fuses

Features and benefits:

- High SCCR rated, UL Listed Class CC holder with optional open fuse indication for 600 Vac/dc and 48 V dc (see catalog number table for details)
- Enhanced safety with IP20 finger-safe construction
- UL Recognized midget and IEC 10x38 holders with factory assembled neutral pole option
- Agency ratings up to 1000 Vdc for use with PV fuses
- Available remote PLC fuse indication module
- Wiring flexibility with terminals rated for use with 75°C or 90°C solid, stranded and fine stranded wire, and spade terminals and comb busbars. (Use any higher temperature insulations at the 90°C ampacity.)
- Complete range of UL Listed and high SCCR rated one- and three-phase finger-safe comb busbars and power feed lugs
- Optional hex head terminal screw makes it easier to achieve necessary torque values

Features:

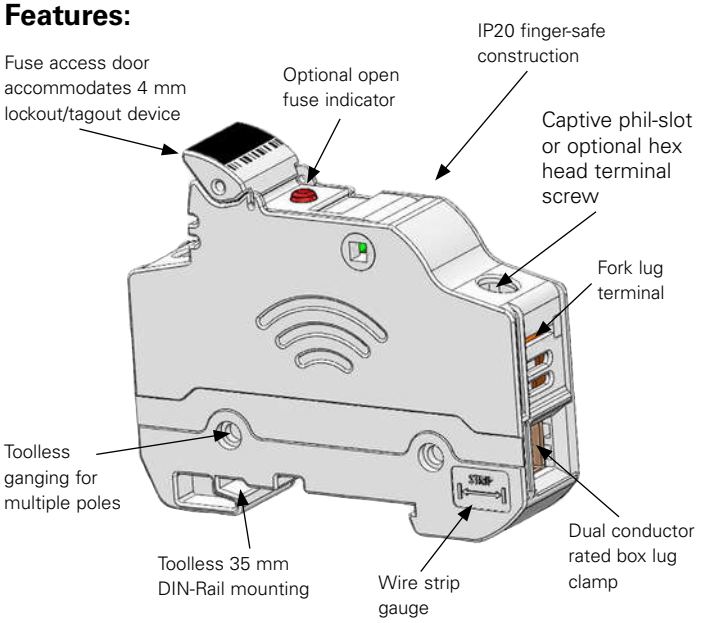

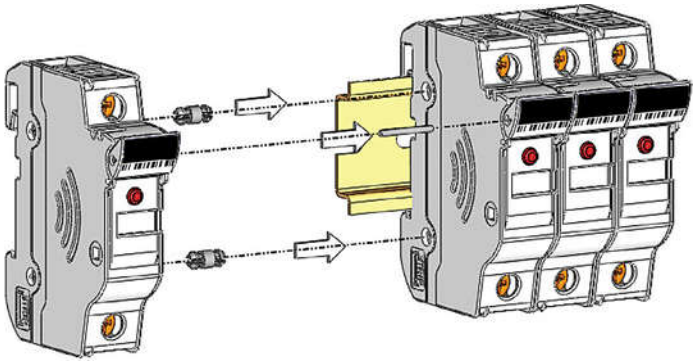

Gang multiple poles to meet application requirements using kit catalog number JV-L (gangs up to four poles).

Dimensions - mm (in):

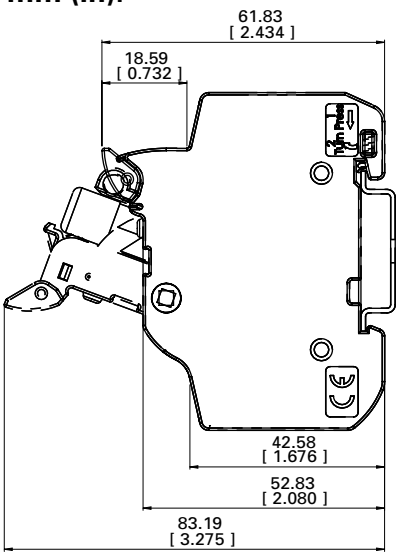

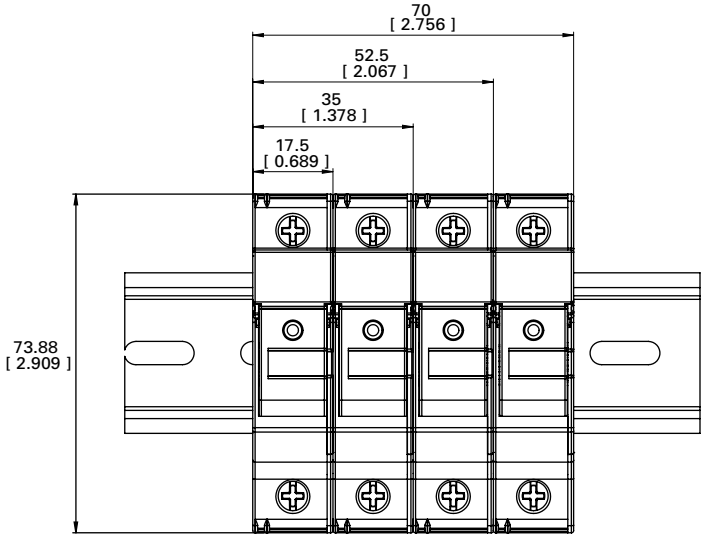

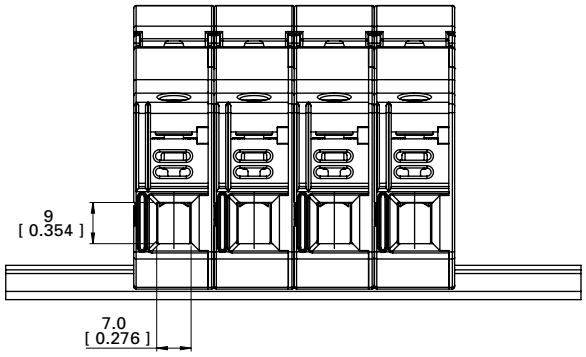



UL midget and IEC 10x38 CHM holder catalog numbers

Catalog number†		Volts and amps		Agency marks	Poles	SCCR	Recommended Bussmann series fuses
With indication*	Without indication	UL	IEC				
CHM1DIU	CHM1DU	600 V/30 A	690 V/32 A	UR, CSA, IEC 60269-2, CCC	1	200 kA** RMS Sym.††	BAF, BAN, FNM, FNQ, FWA, FWC, KLM, KTK, AGU, C10G_, C10M_
CHM2DIU	CHM2DU				2		
CHM3DIU	CHM3DU				3		
CHM4DIU	CHM4DU				4		
CHM1DNIU	CHM1DNU			IEC 60269-2	1 + neutral		
CHM3DNIU	CHM3DNU				3 + neutral		
CHM1DI-48U	—	48 Vdc/30 A	48 Vdc/32 A	UR, CSA, IEC 60269-2, CCC	1		
—	CHM1DNXU	—	690V/32 A	IEC 60269-2		N/A	N/A
CHM1DCIU	CHM1DCU	600 Vac, 1000 Vdc, 30 A	690 V, 32 A	UR, CSA, IEC 60269-2	1	200 kA** RMS Sym., 33 kA DC††	600/690V BAF, BAN, FNM, FNQ, FWA, FWC, KLM, KTK, AGU, C10G_, C10M_, 1000Vdc PV-(amp)A10F, PV10M-(amp)
CHM2DCIU	CHM2DCU				2		
CHM3DCIU	CHM3DCU				3		
CHM4DCIU	CHM4DCU				4		

† Available with optional hex head terminal screws. To order, add "-H" suffix to the desired catalog number.
†† SCCR is limited to the interrupting rating of the installed fuse or 200 kA, which ever is less.
* All models require 90 V minimum for illumination, except CHM1DI-48U that requires 15 V minimum.
** SCCR is limited to the interrupting rating of the installed fuse or 200 kA, which ever is less.



UL Class CC CHCC holder catalog numbers

Catalog number†						Recommended Bussmann series fuses
With indication*	Without indication	Volts / amps	Agency marks	Poles	SCCR	
CHCC1DIU	CHCC1DU	600 V/30 A	cULus, CCC	1	200 kA RMS Sym.	LP-CC, FNQ-R, KTK-R
CHCC2DIU	CHCC2DU			2		
CHCC3DIU	CHCC3DU			3		
CHCC1DI-48U	—	48 Vdc/30 A		1	33 kA DC	

† Available with optional hex head terminal screws. To order, add "-H" suffix to the desired catalog number.
* All models require 90 V minimum for illumination, except CHCC1DI-48U that requires 15 V minimum.



UL and IEC photovoltaic CHPV holder catalog numbers

Catalog number†						Recommended Bussmann series fuses
With indication	Without indication	Volts / amps	Agency marks	Poles	SCCR	
CHPV1IU	CHPV1U	1000 Vdc/30 A	UL, CSA, , UL 4248-19, IEC 60269-1, CCC	1	33 kA DC	PV-(amp)A10F, PV10M-(amp)
CHPV2IU	CHPV2U			2		

† Available with optional hex head terminal screws. To order, add "-H" suffix to the desired catalog number.
* All models require 90 V minimum for illumination.

Conductor information

AWG wire range	Wire type	Wire rating	Terminal torque N•m (lb-in)*
4-12	Solid/Stranded/compact/Class K	75°C or 90°C Cu	3.4 (30)
14-18	Solid/Stranded/Class K		2.3 (20)
(2) 10-12	Stranded		3.4 (30)
10-18 (includes up to 6mm² in metric sizing)	Solid/Stranded/Ferrule		2.8 (25)
(2) 14	Solid/Stranded		3.4 (30)
(2) 16-18			2.8 (25)
Fork terminals	N/A		3.4 (30)
Comb busbar			

* Use a phil-slot bit designed for high torque, or specify hex head terminal screw option.

Accessories:

Bussmann series CH modular fuse holders can be applied using a variety of accessories that facilitate or simplify installation.

35 mm DIN-Rails

- Constructed of high strength stainless steel
- Sold in 1 meter lengths
- Available in high- or low-profile versions

Catalog numbers	Profile	Height
DRL35MMLO	Low	7.5 mm
DRL35MMHI	High	15 mm

Comb busbars



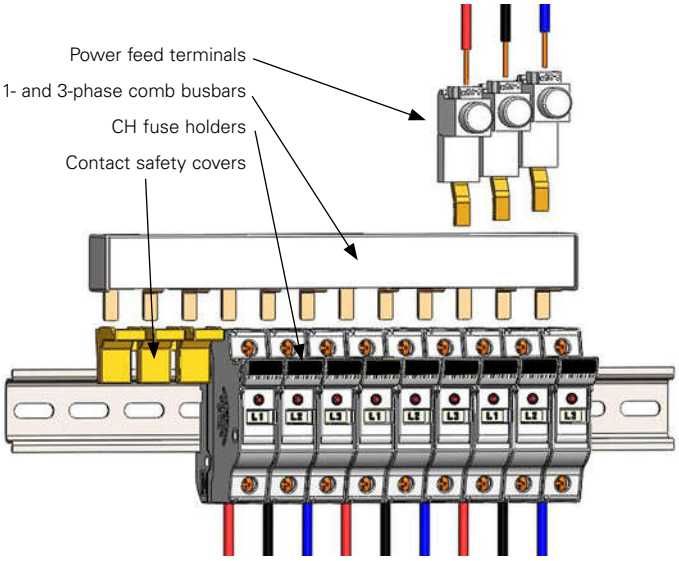

- Easily distribute power in single-or three-phase systems
- Flexible cut-to-length busbars do not compromise the finger-safe protection (requires using endcaps)
- 100 kA SCCR when protected by a max 200 A Class J fuse
- Single-phase busbars rated to 1000 Vdc and 100 A
- Three-phase busbars rated to 600 Vac/dc and 100 A
- Power feed terminals for single-and three-phase systems

Single-phase comb busbars



Available in 3, 6, 9, 12,15 and 57 pin constructions.

Three-phase comb busbars

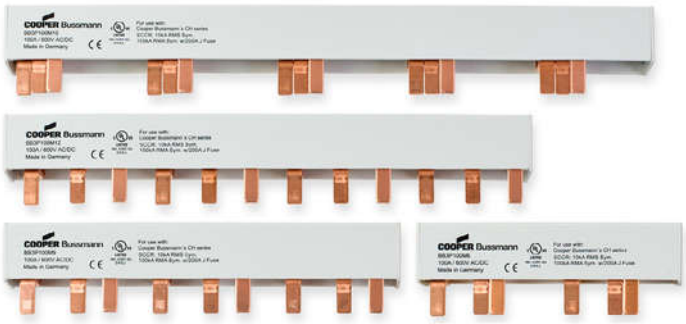

Available in 6, 9, 12, 15 and 57 pin constructions.

Specifications:

Agency information

- UL 508, File E195399

Pitch

- 17.8 mm

Ratings

- Volts
  - 600 Vac/dc max. (three-phase)
  - 1000 Vdc/600 Vac max. (single-phase)
- Amps 100 A max.
- SCCR
  - 10 kA (default)
  - 100 kA (with upstream Class J max 200 A fuses)

Comb busbar dimensions - mm:

Single-phase

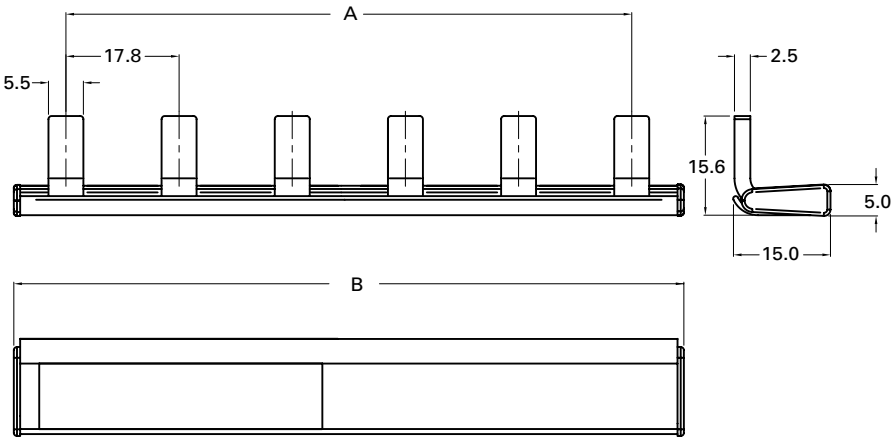

Three-phase

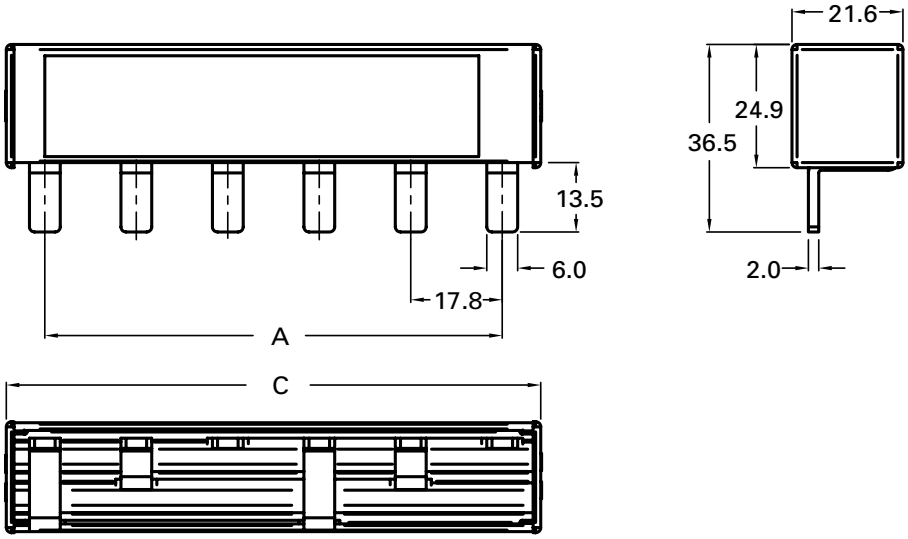

Single- and three-phase dimensions - mm

Poles	A	B	C
3	35.6	52	—
6	89.0	106	104
9	142.4	160	159
12	195.8	208	214
15	249.2	272	266
57	996.8	1012	1009

All 15-pole or fewer comb busbars come with endcaps installed. If a comb busbar will be cut-to-length, order additional endcaps to maintain electrical protection.

End caps are sold in carton quantities of 50. Order ECAP1P for single-phase and ECAPMP for three phase.

Comb busbar catalog numbers:

Catalog number	Phase	Voltage	Amps	Number of pins	Endcaps
BB1P100M3	Single-phase	1000 Vdc	100 A	3	With endcaps assembled. If cut to length, order additional endcaps separately.
BB1P100M6				6	
BB1P100M9				9	
BB1P100M12				12	
BB1P100M15				15	
BB1P100M57				57 pin cuttable	Without endcaps (order separately)
BB3P100M6	Three-phase	600 V	100 A	6	With endcaps assembled. If cut to length, order additional endcaps separately.
BB3P100M9				9	
BB3P100M12				12	
BB3P100M15				15	
BB3P100M57				57 pin cuttable	Without endcaps (order separately)

Power feed terminals:

PWR1PLP



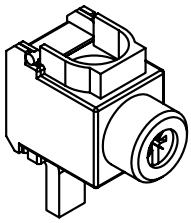

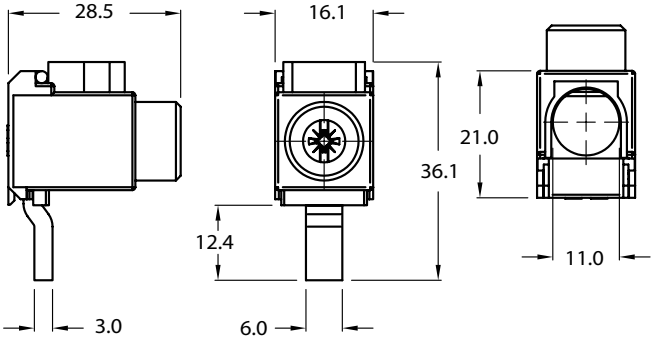

Single-phase, low profile power feed terminal

Ratings

- Volts 1000 Vac/dc
- Amps 115 A
- Wire range 1/0-10 AWG Cu, max torque 50 lb-in (5.6 N•m)
- Wire temp. rating 60°C*

PWR35MM



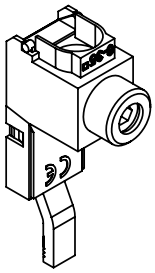

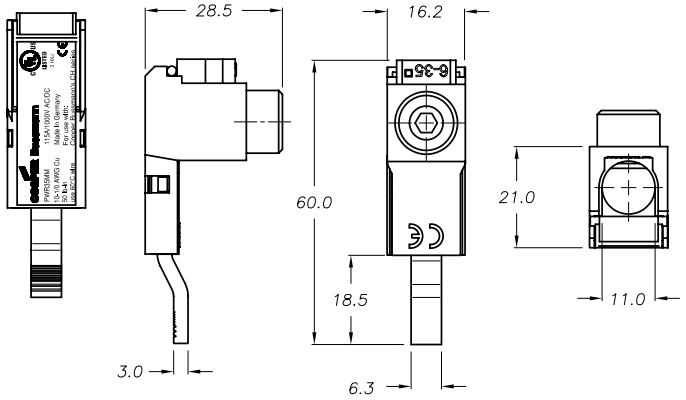

35 mm² three-phase power feed terminal
for three-phase busbars

Ratings

- Volts 1000 Vac/dc
- Amps 115 A
- Wire range 1/0-10 AWG Cu, max torque 50 lb-in (5.6 N•m)
- Wire temp. rating 60°C*

PWR50MM



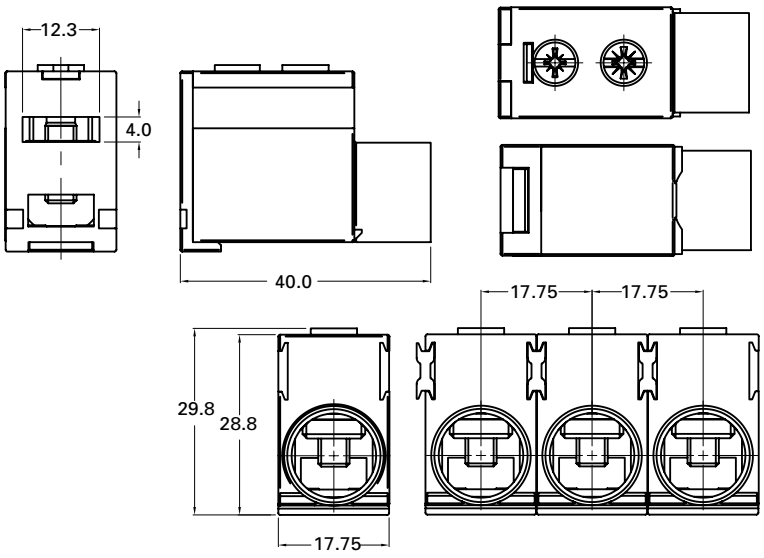

50 mm² direct feed power terminal

Ratings

- Volts 1000 Vac/dc
- Amps 115 A
- Wire range 1-14 AWG Cu, max torque 35 lb-in (3.9 N•m)
- Wire temp. rating 75°C*

* Higher temperature rated wire may be used with appropriate derating.

Comb busbar safety covers and end caps:

FSCVR



Spare comb busbar pin safety protection covers (used to cover exposed pins on comb busbars). Sold in quantity of ten strips of five covers each. (FSCVR comes with five covers on a strip. Minimum order is 10 strips or 50 safety covers total.)

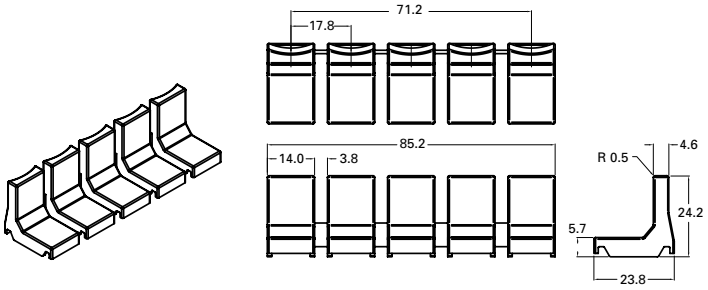

ECAP1P



End cap for single-phase comb busbars. Sold in quantity of fifty.

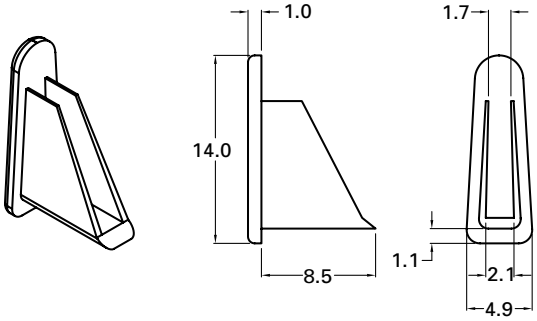

ECAPMP



End cap for three-phase comb busbars. Sold in quantity of fifty.

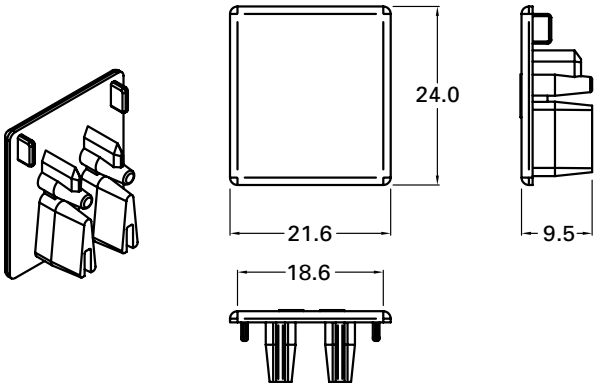

Accessory catalog numbers

Catalog no.	Description	Carton quantity
PWR1PLP	Single-phase low-profile power feed terminal (115 A, 1000 Vac/dc)	10
PWR35MM	35 mm² power feed terminal for three-phase busbar (115 A, 1000 Vac/dc)	10
PWR50MM	50 mm² direct power feed terminal (1000 Vac/dc)	10
ECAP1P	Single-phase busbar endcap	50
ECAPMP	Three-phase comb busbar end cap	50
FSCVR	Spare comb busbar pin safety protection covers	10 strips of five covers each, total 50 individual covers

PLC fuse monitor

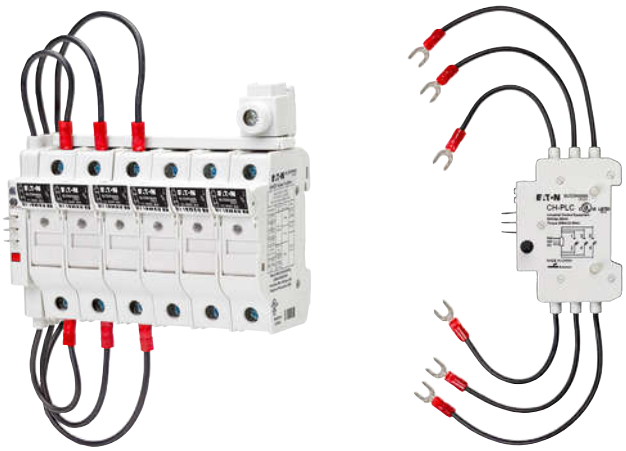

The Bussmann series resettable PLC fuse monitor permits easy integration with a Programmable Logic Controller (PLC) or other monitoring and control equipment. Signals up to three-phases. Includes 0.11" (2.8 mm) quick-connects for power, signal and ground connections.

Ratings

- Signal output to PLC*
  - +24 Vdc, 10 mA max
- Output signals
  - Digital 0 Vdc (low), 24 Vdc max (high)
  - 0 Vdc Low – fuse is good
  - 24 Vdc High – fuse has opened

* When the fuse opens, the output signal is sent high and will remain high until the unit is reset.

Agency information

- UL 508 Listed, Guide NKCR, File E170168
- cULus, Guide NKCR7, File E170168 to Canadian Standard 22.2, No. 14-13

Emissions and immunity testing

- IEC 60947-1: Voltage Switchgear and Control Gear
- IEC 61000-6-2: Electromagnetic Compatibility (EMC)
  - IEC 61000-4-2: Electrostatic Discharge Immunity - Test at level 3 (6 kV-Contact Discharge) and level 2 (4 kV-Air Discharge)
  - IEC 61000-4-3: Electromagnetic Compatibility - Radiated, Radio-frequency, Electromagnetic Field Immunity test at level x (20 V/m)
  - IEC 61000-4-4: Electromagnetic Compatibility - Testing and Measurement Techniques at level 3 (± 2kV - Power Port and ±1 kV - I/O Ports)
  - IEC 61000-4-5: Electromagnetic Compatibility - Surge Immunity test at level 4 (±4 kV)
  - IEC 61000-4-6: Immunity to Conducted Disturbances at level 3 (10 V)

Flammability rating UL 94V0

Local indication

- Two distinct LEDs indicate unit power (green) and open fuse (red). Open fuse LED is resettable upon fuse replacement and the actuating the reset switch

Wiring

- For power, signal and ground connections use shielded twisted pair 22-24 AWG (0.34-0.25 mm^2) 300 V rated wire.

Minimum circuit voltage

- Minimum circuit voltage required across the CH holder is 100 Vac for the remote indication device to operate

Installation

- Mounts on the left side of the fuse holder and mechanically interlocks with the fuse holder switch handle with hardware provided

Degree of protection IP20 finger-safe

Storage and operating temperature

- -4°F (-20°C) to +167°F (+75°C)

PLC programming

- The CH-PLC2 signal line is designed to provide a digital input to a PLC I/O card
- Programmable Logic Control program must be written to properly interpret the input signal to the PLC
- The PLC program should check for consecutive high signals before taking action on a critical process

To order

- Specify catalog number CH-PLC2 (one unit)

PLC wiring schematic

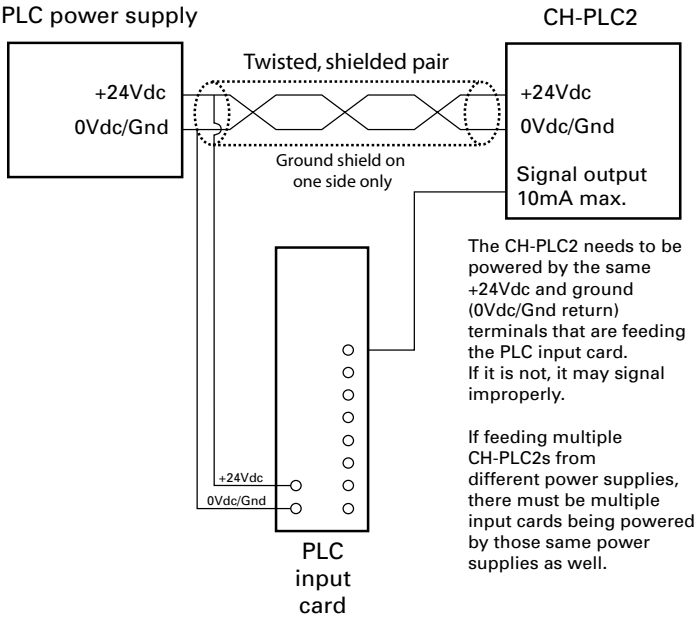

CH modular, IP20 finger-safe DIN-Rail holders for Class CC, supplemental and PV fuses

The only controlled copy of this data sheet is the electronic read-only version located on the Eaton network drive. All other copies of this document are by definition uncontrolled. This bulletin is intended to clearly present comprehensive product data and provide technical information that will help the end user with design applications. Eaton reserves the right, without notice, to change design or construction of any products and to discontinue or limit distribution of any products. Eaton also reserves the right to change or update, without notice, any technical information contained in this bulletin. Once a product has been selected, it should be tested by the user in all possible applications.

Eaton
1000 Eaton Boulevard
Cleveland, OH 44122
Eaton.com

Bussmann Division
114 Old State Road
Ellisville, MO 63021
United States
Eaton.com/bussmannseries

© 2023 Eaton
All Rights Reserved
Publication No. 10430
March 2023

Eaton and Bussmann are valuable trademarks of Eaton in the US and other countries. You are not permitted to use the Eaton trademarks without prior written consent of Eaton.

CSA is a registered trademark of the Canadian Standards Group.
UL is a registered trademark of the Underwriters Laboratories, Inc.

For Eaton's Bussmann series product information, call **1-855-287-7626** or visit: **Eaton.com/bussmannseries**

Follow us on social media to get the latest product and support information.

Powering Business Worldwide