E11855

Connecting cable with socket

ADOGH080MSS0010K08

For 8-pole sockets the core colours are not standardised.
Please note the wiring of the sensor and the sockets (see data sheet).

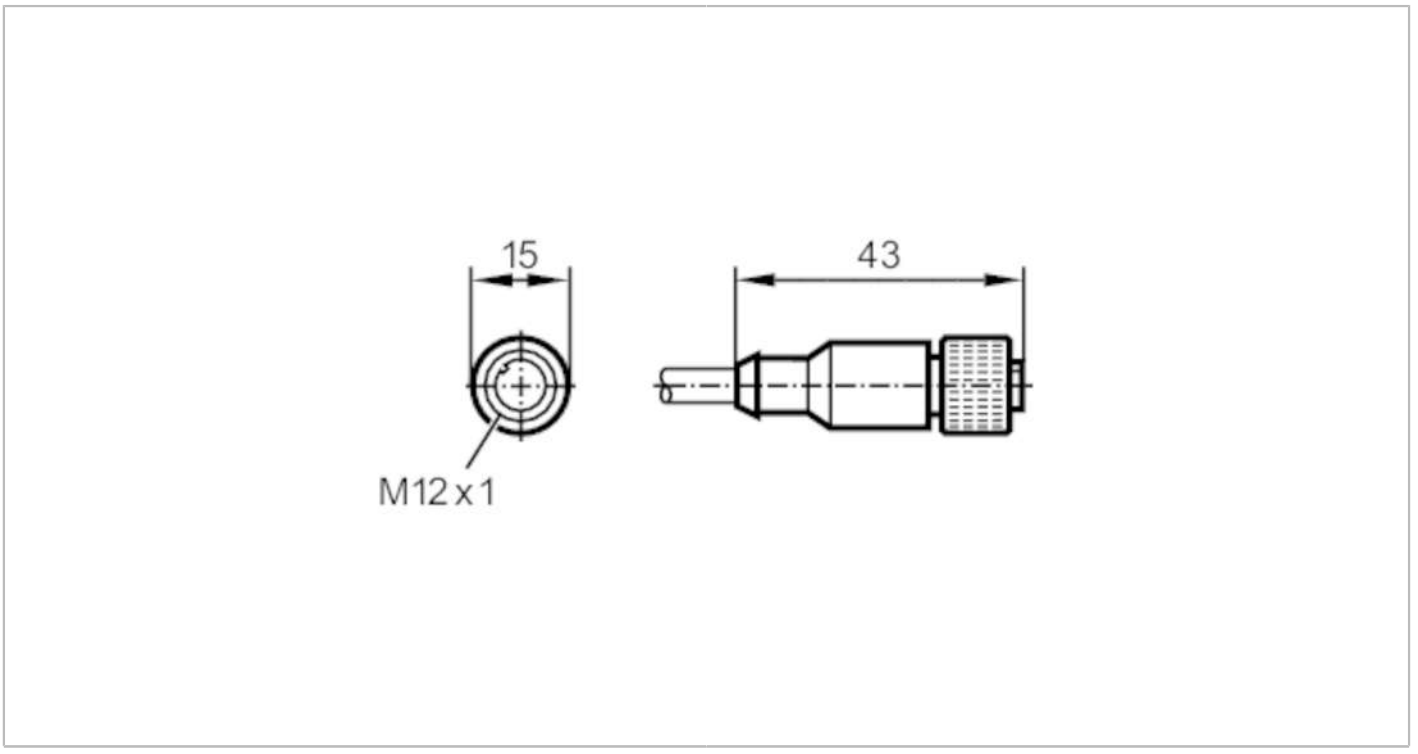

Application		
Special feature		Screened cable
Electrical data		
Operating voltage	[V]	< 30 AC / < 36 DC
Protection class		III
Operating conditions		
Ambient temperature	[°C]	-25...80
Protection		IP 67
Mechanical data		
Weight	[g]	677
Dimensions	[mm]	15 x 15 x 43
Materials		PUR
Moulded-body material		PUR
Material nut		brass, nickel-plated
Remarks		
Pack quantity		1 pcs.

E11855

Connecting cable with socket

ADOGH080MSS0010K08

Electrical connection

Cable: 10 m, PUR, black, Ø 6.6 mm, shielded; 8 x 0.25 mm² (14 x Ø 0.15 mm)

Electrical connection - socket

Connector: 1 x M12, straight; coding: A; Moulded body: PUR; Locking: brass, nickel-plated; Tightening torque: 0.7...0.9 Nm; Shielded connection cable: screen connected



Connection

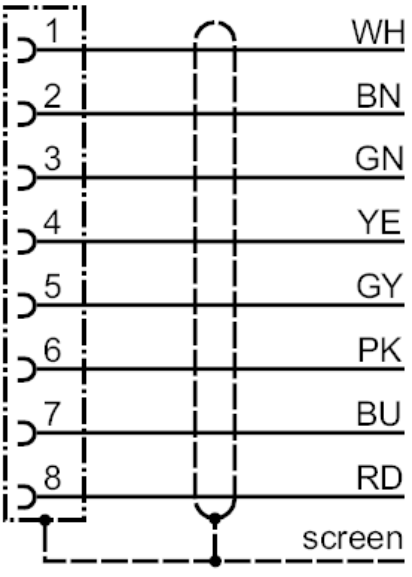

	colours to DIN 47100
	Core colours :
BN =	brown
BU =	blue
GN =	green
GY =	grey
PK =	pink
RD =	red
WH =	white
YE =	yellow
screen =	screen