# 97300 NAMUR, 3/2 & 5/2
# Indirect solenoid actuated spool valve

- Port size: G1/4, 1/4 NPT, NAMUR Interface
- Main application: Single and double acting actuators
- 5/2 way valve usable as 3/2 way valve
- Crossover-free switching
- Manual override with detent
- Variable valve solenoid combination



## Technical features

**Medium:**
Filtered, lubricated or non-lubricated and dry compressed air

**Operation:**
Indirect solenoid operated spool valve

**Operating pressure:**
2 ... 8 bar (29 ... 116 psi)
Below -10°C (14°F) must be > 2,5 bar (> 36 psi)

**Port size:**
NAMUR G1/4, NAMUR 1/4 NPT
NAMUR Interface with integrated recirculation from the exhaust air to the acutator sping chamber

**Flow direction:**
Fixed

**Mounting position:**
Optional

**Ambient/Media temperature:**
-15 ... +50°C (+5 ... +122°F)
Air supply must be dry enough to avoid ice formation at temperatures below +2°C (35°F).

**Materials:**
Housing: Aluminium anodized
Pilot flange: Plastic (PBT)
Flange plate: Aluminium
Seals: NBR

## Technical data

### Housing: Aluminium anodized, Sealing: NBR -15 ... +50°C (+5 ... 122°F)

| Symbol | Port size | Actuation/Return | Flow (l/min) | Weight (kg) | (lbs) | Drawing No. | Model *1) |
|---|---|---|---|---|---|---|---|
| 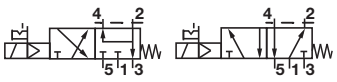 | NAMUR G1/4 | Solenoid/Spring | 1230 | 0,42 | 0.9 | 1 | 9730000 |
| | NAMUR 1/4 NPT | Solenoid/Spring | 1230 | 0,42 | 0.9 | 1 | 9730010 |
| | | | | | | | |
|  | NAMUR G1/4 | Solenoid/Solenoid | 1250 | 0,50 | 1.1 | 2 | 9731000 |
| | NAMUR 1/4 NPT | Solenoid/Solenoid | 1250 | 0,50 | 1.1 | 2 | 9731010 |

*1) When ordering please indi ate solenoid, voltage and current type (frequency).

## Option selector

973★0★0 ★★★★ ★★★★★

| Function) | Substitute |
|---|---|
| 5/2 way, spring return (3/2 way spare adaptor plate supplied) | 0 |
| 5/2 way, solenoid return (3/2 way spare adaptor plate supplied) | 1 |
| **Ports size** | **Substitute** |
| G1/4 | 0 |
| 1/4 NPT | 1 |

| Voltage | Substitute |
|---|---|
| 24 V d.c. | 02400 |
| 230 V a.c. | 23050 |
| **Solenoid actuators** | **Substitute** |
| See table on page 2 | |


Our policy is one of continued research and development. We therefore reserve the right to amend, without notice, the specifications given in this document. (2009 - 5154f) © 2024 Norgren GmbH.

## Solenoids, standard voltages

| | Power consumption 24 V d.c. (W) | 230 V a.c. (VA) | Rated current 24 V d.c. (m A) | 230 V a.c. (m A) | Protection class IP/NEMA | Ex-Protection (ATEX-Category) | Temperature Ambient/Media (°C) | Electrical connection | Weight (kg) | Drawing No. | Circuit diagram No. | Model |
|---|---|---|---|---|---|---|---|---|---|---|---|---|
|  | 1,8 | – | 70 | – | IP65 (with connector) | – | -15 ... +50 | Connector DIN EN 175301-803, form B *1) | 0,1 | 11 | 1 | 3050 |
|  | 1,6 | – | 30 | – | IP65 (with connector) | – | -15 ... +50 | Connector DIN EN 175301-803, form A *1) | 0,1 | 12 | 1 | 3036 |
|  | 2 | – | 85 | – | IP65 (with connector) | II 3 G Ex nA IIC T5 Gc II 3 D Ex tc IIIC T95° Dc IP65 | -15 ... +50 | Connector DIN EN 175301-803, form A *1) | 0,3 | 5 | 1 | 3046 |
| | – | 2 | – | 18 | IP65 (with connector) | II 3 G Ex nA IIC T5 Gc II 3 D Ex tc IIIC T95° Dc IP65 | -15 ... +50 | Connector DIN EN 175301-803, form A *1) | 0,3 | 5 | 1 | 3047 |
|  | 2,7 | – | 115 | – | IP65 (with connector) | II 2 G Ex mb IIC T5 Gb II 2 D Ex mb tb T95°C Db | -20 ... +50 | Cable length 3 m | 0,3 | 13 | 14 | 3062 |
| | – | 2,1 | – | 9 | IP65 (with connector) | II 2 G Ex mb IIC T5 Gb II 2 D Ex mb tb T95°C Db | -20 ... +50 | Cable length 3 m | 0,3 | 13 | 15 | 3063 |
|  | 2,7 | – | 115 | – | IP66 (with connector) | – | -10 ... +50 | Connector *1) M12x1, DIN IEC 61076-2-101 Solenoid with yellow LED | 0,1 | 14 | 17 | 3071 |

Standard voltages (±10%) 24 V d.c., 230 V a.c., other voltages on request. Design according to VDE 0580, EN 50014/50028. 100% duty cycle.
*1) Connector/cable gland is not scope of delivery,, see table »Accessories«

## Approvals

| Model | Approvals ATEX | Datasheet |
|---|---|---|
| 3046, 3047 | Declaration by the Manufacturer | N/en 7.1.555 |
| 306x | PTB 03 ATEX 2015 | N/en 7.1.560 |

## Electrical connection M12 x 1

| Model | Pin | Cable |
|---|---|---|
|   | 1 | brown |
| | 2 | white |
| | 3 | blue |
| | 4 | black |


Our policy is one of continued research and development. We therefore reserve the right to amend, without notice, the specifications given in this document. (2009 - 5154f) © 2024 Norgren GmbH.

## Accessories

| Connector DIN EN 175301-803 | 4-pin, 90° | 4-pin, 90° | 4-pin, straight | 4-pin, straight |
|---|---|---|---|---|
|  |  |  |  |  |
| Page 7 | Page 7 | Page 7 | Page 7 | |
| 0570275, form A | 0523058 (2 m cable,4-core) | 0523056 (without cable) | 0523057 (2 m cable, 4-core) | 0523055 (without cable) |
| 0680003, form B | 0523053 (5 m cable,4-core) | | 0523052 (5 m cable, 4-core) | |

| Silencer |
|---|
|  |
| Page 7 |
| C/S2 (1/4 NPT) |
| M/S2 (G1/4) |

## NAMUR accessories

| Throttle control plate *1) | Flange plate | Yoke | Distance plate for pressure switches | Mounting plate | Quick exhaust module *2) |
|---|---|---|---|---|---|
|  |  |  |  |  |  |
| Page 6 | Page 5 | Page 6 | Page 6 | Page 6 | |
| 4040239 | 0612790 (NAMUR single connection plate) | 0540593 | 0540109 | 0613453 (90°) | 4050218 |
| | 0612791 (NAMUR-rip use in combination with 0612790) | | | 0612631 (180°) | |

*1) The throttle control plate 4040239 has a minimum flow rate for safety reason.
*2) Technical details see catalogue page en 5.4.820.

## Drawings
## Valves

Dimensions in mm
Projection/First angle



1

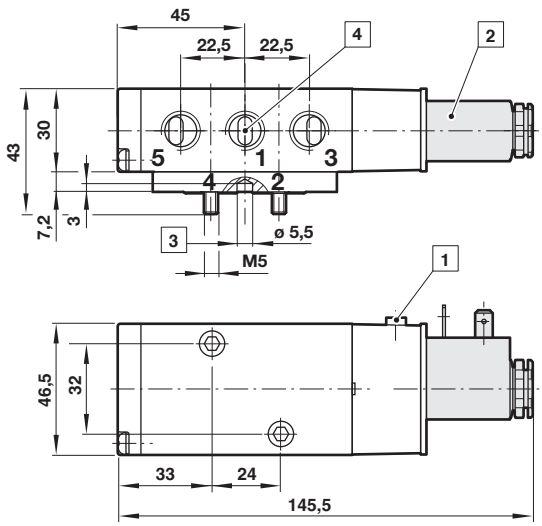


2

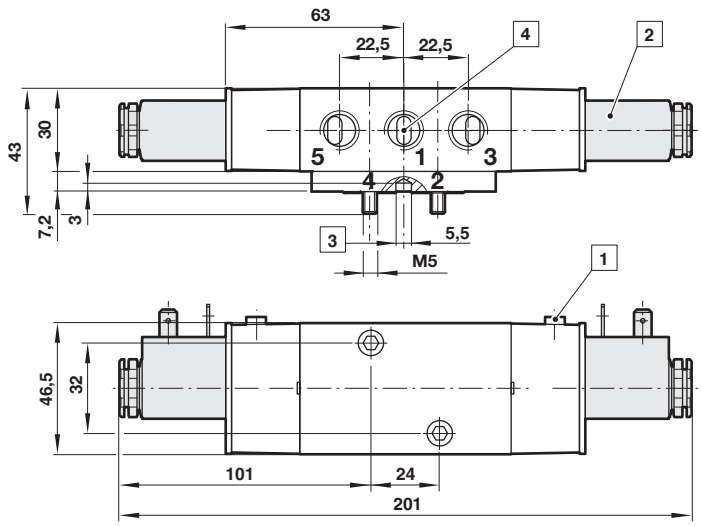


1 Manual override
2 Solenoid operator
3 Coding stud
4 Port size G1/4 or 1/4 NPT


Our policy is one of continued research and development. We therefore reserve the right to amend, without notice, the specifications given in this document. (2009 - 5154f) © 2024 Norgren GmbH.

## Solenoids

Dimensions in mm
Projection/First angle

11

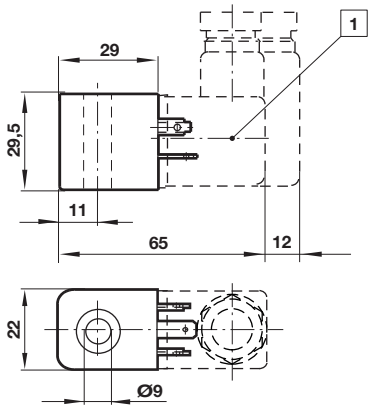


12

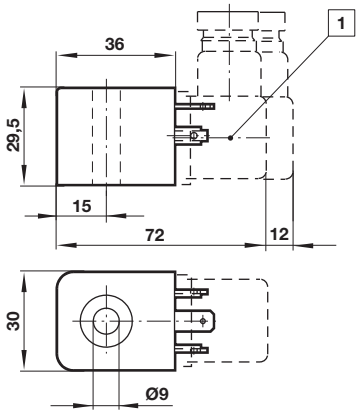


13

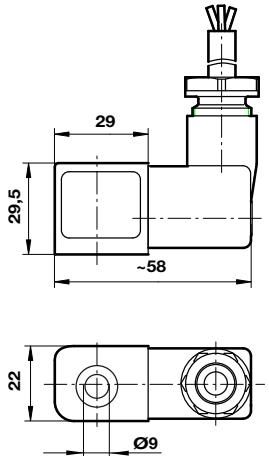


14

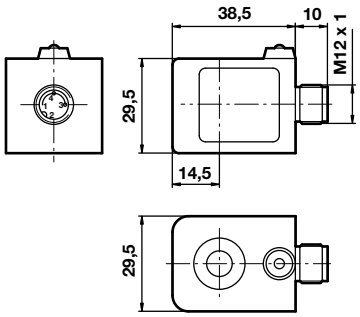


1 Connector 4 x 90° turnable

## Circuit diagrams

1

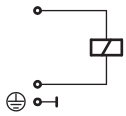

14

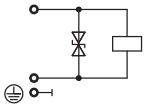

15

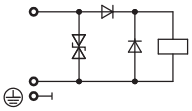

17

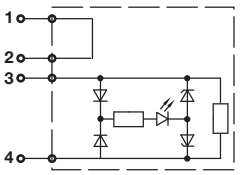



Our policy is one of continued research and development. We therefore reserve the right to amend, without notice, the specifications given in this document. (2009 - 5154f) © 2024 Norgren GmbH.

## NAMUR hole pattern (actuator side)

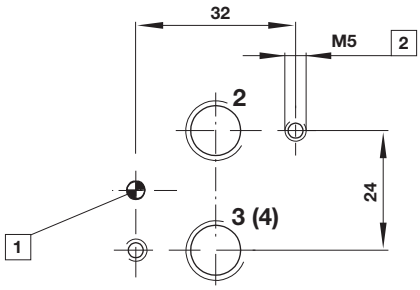


1 Coding stud threaded
2 10 mm deep

## Conversion instructions of 5/2 into 3/2 way function

**5/2 way function**

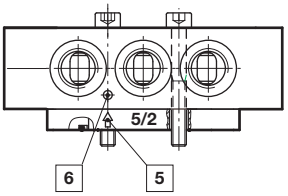


**3/2 way function**

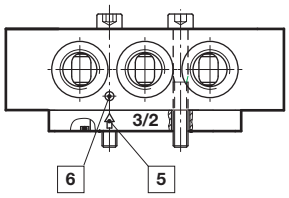


3/2 resp. 5/2 way function can be achieved just by swapping enclosed adaptor plates. Make sure marker and arrow do match as shown on above drawing. Original mode of supply: 5/2 function.

5 Arrow
6 Marker

## Accessories

### Silencer

Model: M/S1, C/S1

Dimensions in mm
Projection/First angle

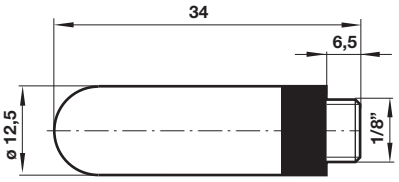


### Single connection plate

Model: 0612790

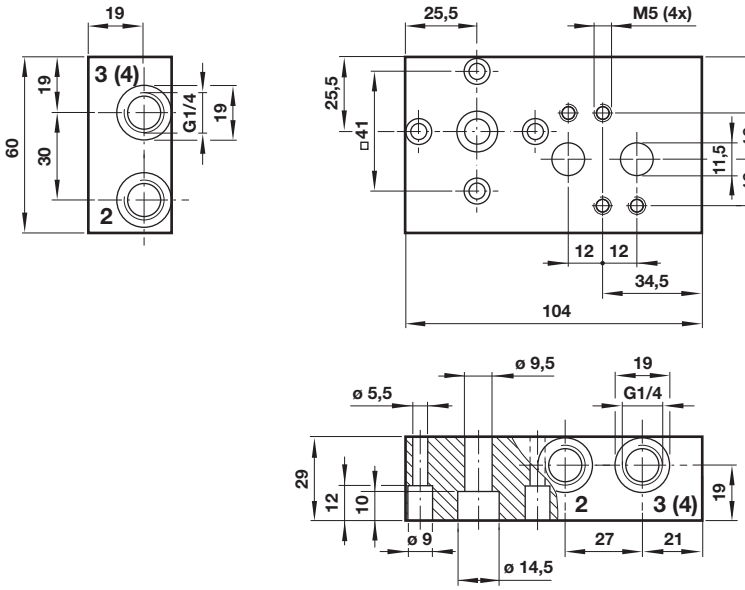


### NAMUR slot

Model: 0612791

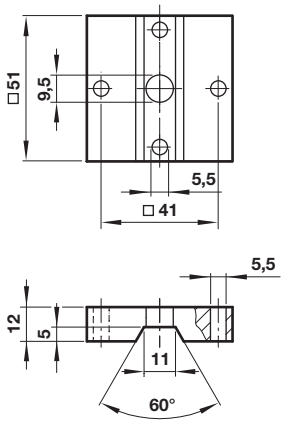




Our policy is one of continued research and development. We therefore reserve the right to amend, without notice, the specifications given in this document. (2009 - 5154f) © 2024 Norgren GmbH.

## Yoke
Model: 0540593

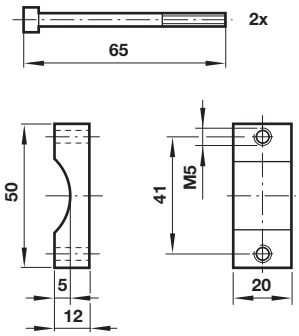


## Throttle control plate
Model: 4040239

Dimensions in mm
Projection/First angle

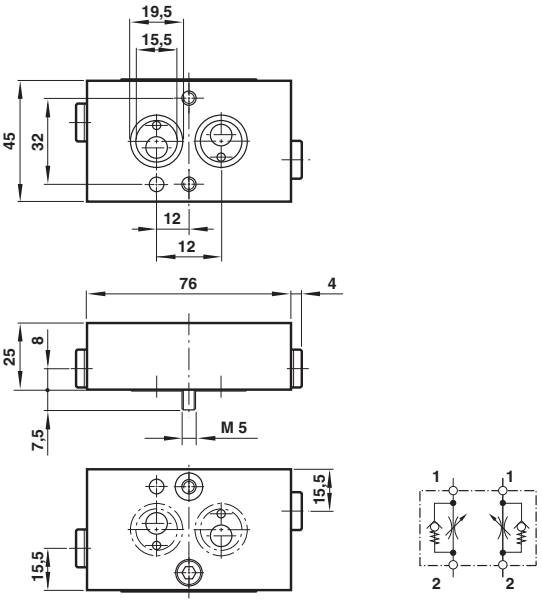


## Distance plate for pressure switches
Model: 0540109

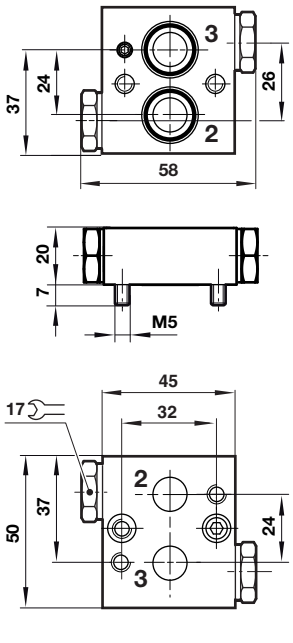


## Mounting plate
Model: 0613453 (90°)

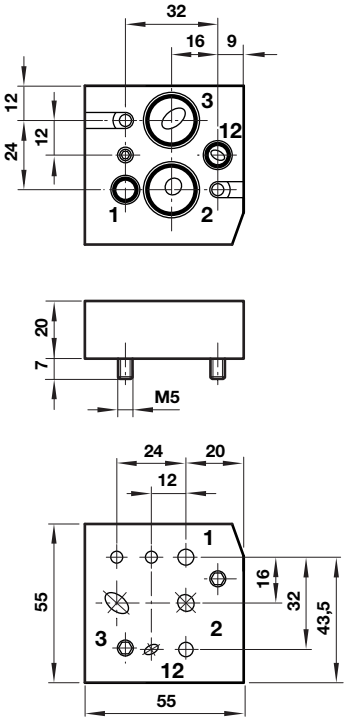


Model: 0612631 (180°)

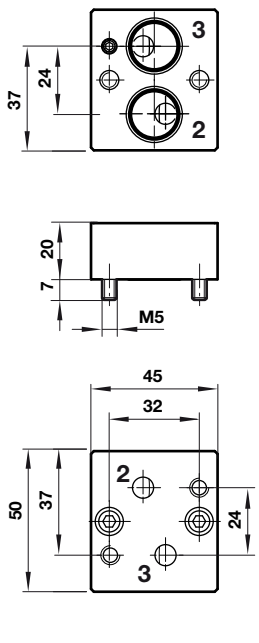



Our policy is one of continued research and development. We therefore reserve the right to amend, without notice, the specifications given in this document. (2009 - 5154f) © 2024 Norgren GmbH.

## Connector
## 90°, 4 pin, with PUR cable

Dimensions in mm
Projection/First angle

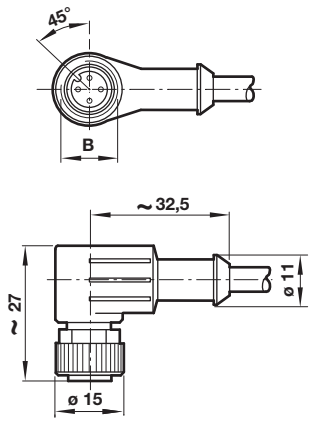


| B | C | øD | øD1 | F | Wire x dim. | Cable length (m) | Weight (g) | Model |
|---|---|---|---|---|---|---|---|---|
| M12 x 1,5 | 32,5 | 15 | 11 | 27 | 4 x 0,34 mm2 | 2 | 90 | 0523058 |
| M12 x 1,5 | 32,5 | 15 | 11 | 27 | 4 x 0,34 mm2 | 5 | 180 | 0523053 |

## 4 pin, without cable

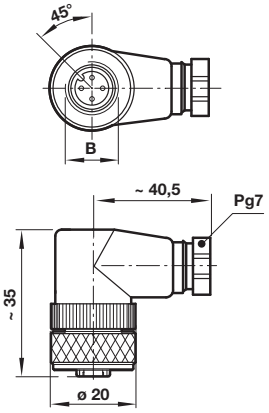


| B | C | øD | E | F | Weight (g) | Model |
|---|---|---|---|---|---|---|
| M12 x 1,5 | 40,5 | 20 | Pg 7 | 35 | 30 | 0523056 |

## Straight, 4 pin, with PUR cable

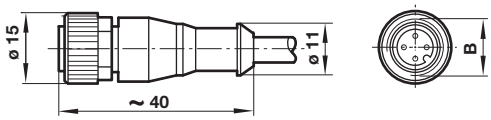


| B | C | øD | øD1 | Wire x dim. | Cable length (m) | Weight (g) | Model |
|---|---|---|---|---|---|---|---|
| M12 x 1,5 | 40 | 15 | 11 | 4 x 0,34 mm2 | 2 | 80 | 0523057 |
| M12 x 1,5 | 40 | 15 | 11 | 4 x 0,34 mm2 | 5 | 200 | 0523052 |

## Straight, 4 pin, without cable

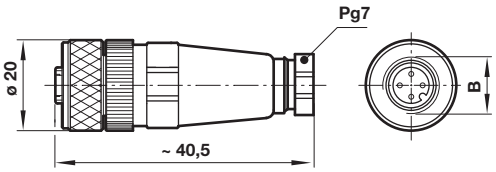


| B | C | øD | E | Weight (g) | Model |
|---|---|---|---|---|---|
| M12 x 1,5 | 40,5 | 20 | Pg 7 | 26 | 0523055 |

## Warning

These products are intended for use in industrial compressed air systems only. Do not use these products where pressures and temperatures can exceed those listed under **»Technical features/data«**.
Before using these products with fluids other than those specified, for non-industrial applications, life-support systems or other applications not within published specifications, consult Norgren.
Through misuse, age, or malfunction, components used in fluid power systems can fail in various modes.

The system designer is warned to consider the failure modes of all component parts used in fluid power systems and to provide adequate safeguards to prevent personal injury or damage to equipment in the event of such failure.
System designers must provide a warning to end users in the system instructional manual if protection against a failure mode cannot be adequately provided.
System designers and end users are cautioned to review specific warnings found in instruction sheets packed and shipped with these products.


Our policy is one of continued research and development. We therefore reserve the right to amend, without notice, the specifications given in this document. (2009 - 5154f) © 2024 Norgren GmbH.