AC Current transducer AKR-C420L

I_{PN} = 2..200A

Transducer for the electronic measurement AC waveforms current, with galvanic isolation between the primary (High power) and the secondary circuits (Electronic circuit). Jumper selectable ranges and True RMS 4-20mA current output.



Electrical data

Primary Nominal Current I_{PN} (A.t.RMS)	Analogue Output Signal[1] I_{OUT} (mA)	Type	RoHS Date Code
2,5	4-20	**AKR 5 C420L**	JULY 2006
10,20,50	4-20	**AKR 50 C420L**	planned
100,150,200	4-20	**AKR 200 C420L**	JULY 2006

Vc	Supply voltage (Loop powered)	24	V DC
R_L	Load resistance	see power supply diagram	
V_b	Rated voltage (CAT III, PD2)	150	VAC
V_d	RMS Isolation voltage test, 50 Hz, 1mn	3	kV AC
f	Frequency bandwith	10-400	Hz

Accuracy - Dynamic performance data

X	Accuracy @ I_{PN}, T_A=25°C	± 1	%
t_r	Response time @ 90% of I_{PN}	< 600	mS

General data

T_A	Ambient operating temperature (0-95% RH)	-20 ..+ 50	°C
T_S	Ambient storage temperature	-20 ..+ 85	°C
m	Mass	90	g
	Safety	IEC 61010-1	
	EMC	EN 61326	

Note: [1] For 4-20mA output model, no saturation output up to 23 mA.

Selecting the transducer

VFD (Variable Frequency Drive) and SCR (Semi Conductor Rectifier) output waveforms are rough approximations of a sine wave. There are numerous spikes and dips in each cycle. AKR transducers use a mathematical algorithm called "True RMS," which integrates the actual waveform over time. True RMS is the only way to accurately measure distorted AC waveforms. *Select AKR transducers for nonlinear loads or in "noisy" power environments.*

Features

- VFD and SCR waveforms current measurement
- True RMS responding
- 4-20 mA Current output
- Loop powered transducers
- Panel mounting
- Accurate
- Jumper selectable ranges

Advantages

- Large aperture
- High isolation between primary and secondary circuits
- Easy to mount

Applications

- VFD Controlled Loads:
  VFD output indicates how the motor and attached load are operating.
- SCR Controlled Loads:
  Acurate measurement of phase angle fired or burst fired (time proportioned) SCRs.
- Switching Power Supplies and Electronic Ballasts:
  True RMS sensing is the most accurate way to measure power supply or ballast input power.

Options on request

- DIN mounting

LEM reserves the right to carry out modifications on its transducers, in order to improve them, without previous notice.

Dimensions AKR-C420L (unit : mm, 1mm = 0.0394 inch)

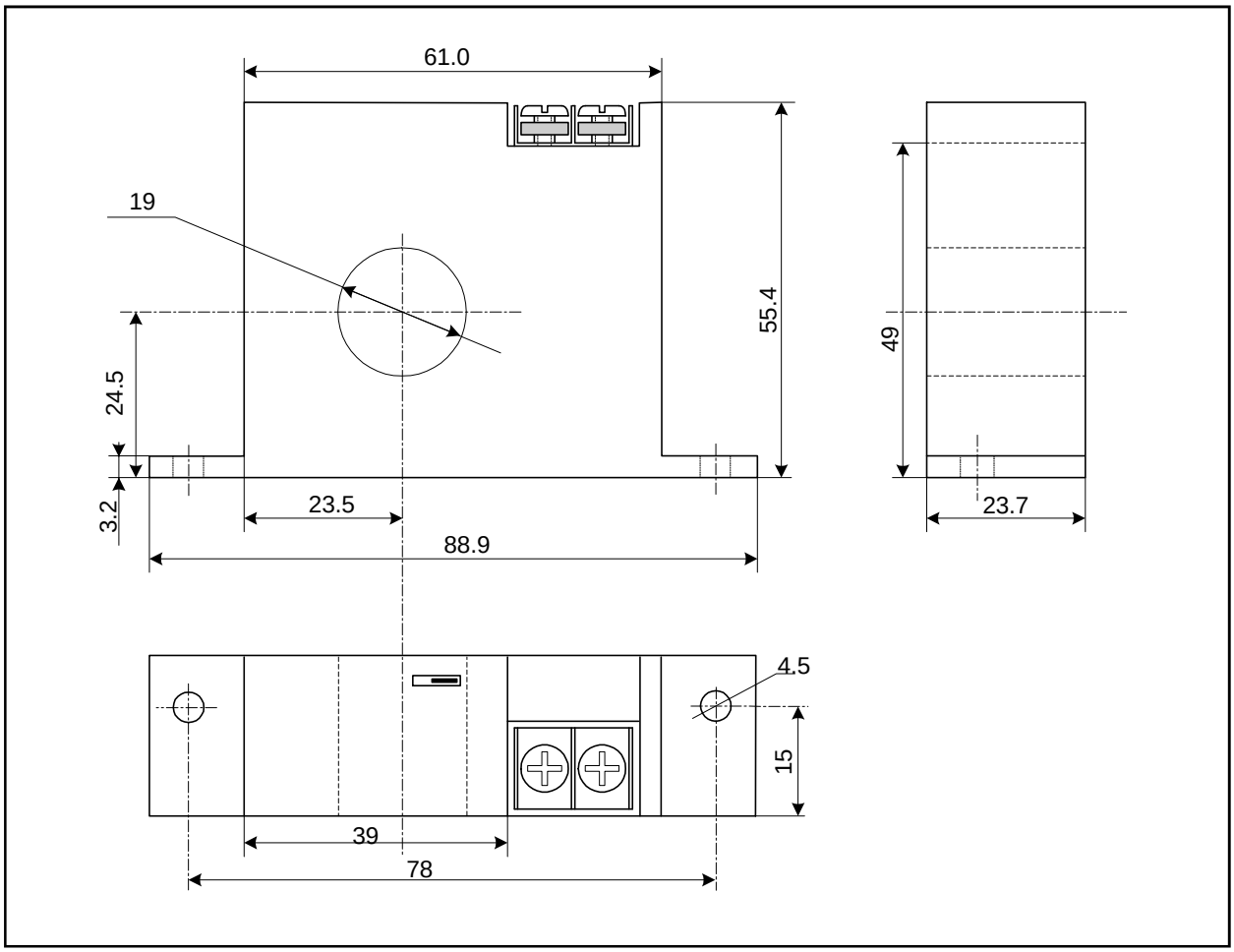

Mechanical characteristics

• General tolerance	± 1 mm
• Primary aperture	19 mm
• Panel mounting	2 holes ∅ 4.5mm
Distance between holes	78 mm

Connections

• 2 x UNC8 Cylindric Head

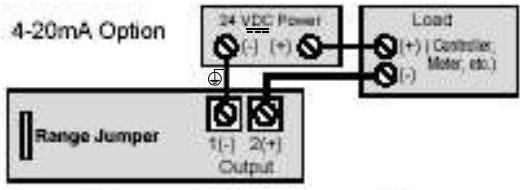

Notes: - Captive screw terminals.
- 12-22 AWG solid or stranded.
- Observe polarity.

Power Supply diagram

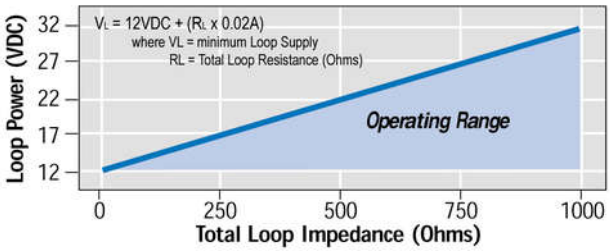

Remark

• Temperature of the primary conductor should not exceed 60°C.

LEM reserves the right to carry out modifications on its transducers, in order to improve them, without previous notice.