DATASHEET - BK25/3-PKZ0-E



Extension terminal, 3p, 25mm²

Part no.	**BK25/3-PKZ0-E**
Catalog No.	**262518**
Eaton Catalog No.	**XTPAXLSA**
EL-Nummer (Norway)	**4315194**

Design verification as per IEC/EN 61439

Technical data for design verification			
Rated operational current for specified heat dissipation	I_n	A	63
Heat dissipation per pole, current-dependent	P_{vid}	W	1.8
Equipment heat dissipation, current-dependent	P_{vid}	W	5.4
Static heat dissipation, non-current-dependent	P_{vs}	W	0
Heat dissipation capacity	P_{diss}	W	0
Operating ambient temperature min.		°C	-25
Operating ambient temperature max.		°C	55
IEC/EN 61439 design verification			
10.2 Strength of materials and parts			
10.2.2 Corrosion resistance			Meets the product standard's requirements.
10.2.3.1 Verification of thermal stability of enclosures			Meets the product standard's requirements.
10.2.3.2 Verification of resistance of insulating materials to normal heat			Meets the product standard's requirements.
10.2.3.3 Verification of resistance of insulating materials to abnormal heat and fire due to internal electric effects			Meets the product standard's requirements.
10.2.4 Resistance to ultra-violet (UV) radiation			Meets the product standard's requirements.
10.2.5 Lifting			Does not apply, since the entire switchgear needs to be evaluated.
10.2.6 Mechanical impact			Does not apply, since the entire switchgear needs to be evaluated.
10.2.7 Inscriptions			Meets the product standard's requirements.
10.3 Degree of protection of ASSEMBLIES			Does not apply, since the entire switchgear needs to be evaluated.
10.4 Clearances and creepage distances			Meets the product standard's requirements.
10.5 Protection against electric shock			Does not apply, since the entire switchgear needs to be evaluated.
10.6 Incorporation of switching devices and components			Does not apply, since the entire switchgear needs to be evaluated.
10.7 Internal electrical circuits and connections			Is the panel builder's responsibility.
10.8 Connections for external conductors			Is the panel builder's responsibility.
10.9 Insulation properties			
10.9.2 Power-frequency electric strength			Is the panel builder's responsibility.
10.9.3 Impulse withstand voltage			Is the panel builder's responsibility.
10.9.4 Testing of enclosures made of insulating material			Is the panel builder's responsibility.
10.10 Temperature rise			The panel builder is responsible for the temperature rise calculation. Eaton will provide heat dissipation data for the devices.
10.11 Short-circuit rating			Is the panel builder's responsibility. The specifications for the switchgear must be observed.
10.12 Electromagnetic compatibility			Is the panel builder's responsibility. The specifications for the switchgear must be observed.
10.13 Mechanical function			The device meets the requirements, provided the information in the instruction leaflet (IL) is observed.

Technical data ETIM 6.0

Low-voltage industrial components (EG000017) / Busbar terminal (EC000001)			
Electric engineering, automation, process control engineering / Electrical installation, device / Clamp (not overhead line) / Switch board (ecl@ss8.1-27-14-11-46 [BAA025010])			
Busbar thickness		mm	0 - 0
Busbar width		mm	0 - 0
Suitable for			Other
Width clamp		mm	45
Max. conductor cross section		mm^2	25
Max. rated operation current Ie		A	63
Suitable for round conductor connection			Yes

Suitable for sector conductor connection	No
Suitable for strip conductor connection	No

Approvals

Product Standards	UL 508; CSA-C22.2 No. 14; IEC60947-4-1; CE marking
UL File No.	E36332
UL Category Control No.	NLRV
CSA File No.	98494
CSA Class No.	3211-06
North America Certification	UL listed, CSA certified
Specially designed for North America	Yes
Suitable for	PKZM0/PKE, line terminal required for Type E/F applications

Dimensions

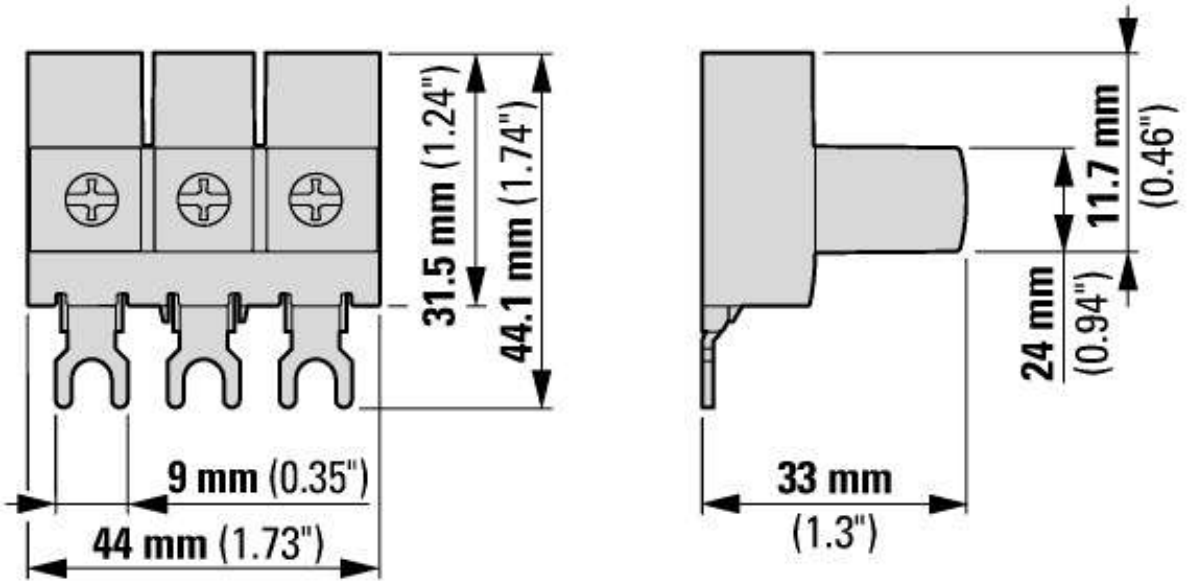

Overlapping mounting to extend the three-phase commoning link

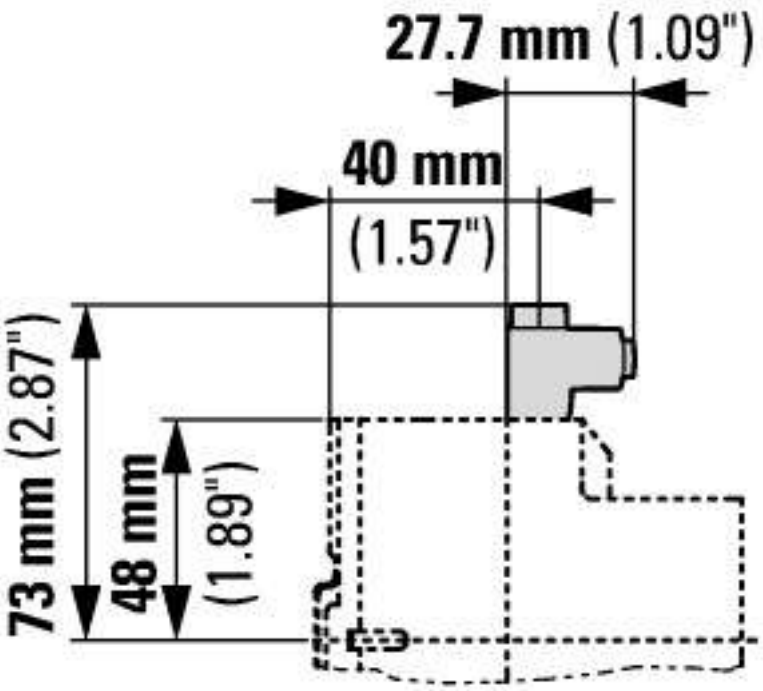

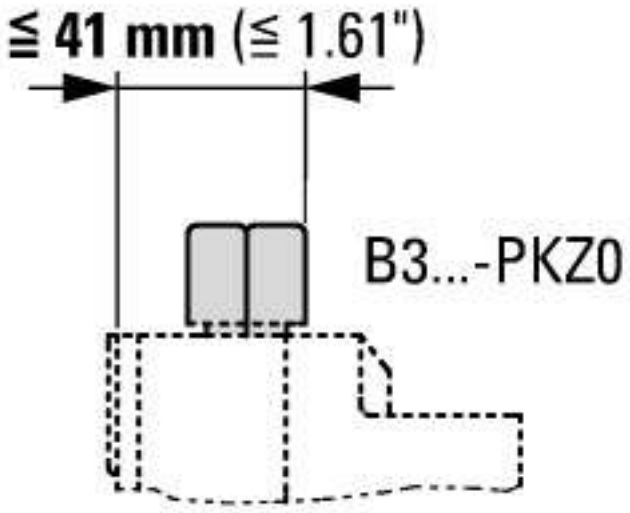

© 07/2018 by Eaton Industries GmbH