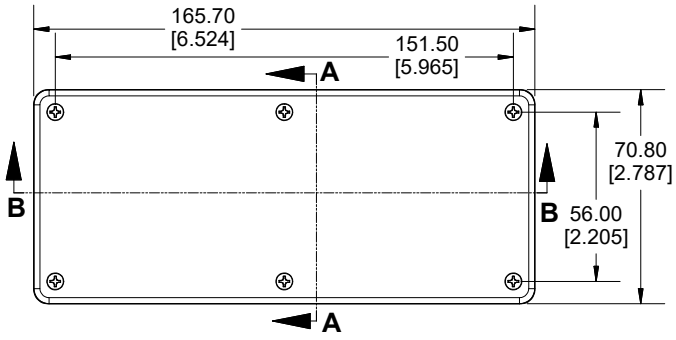

TOP VIEW

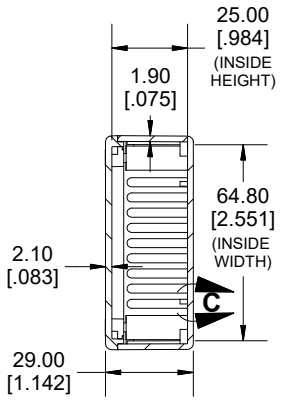

SECTION A-A

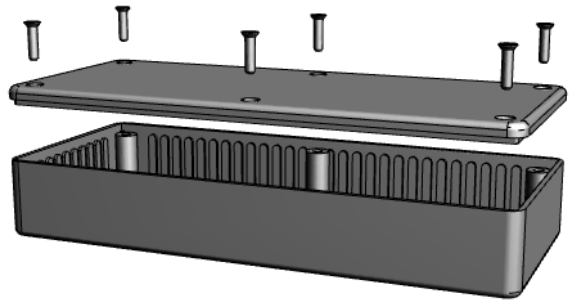

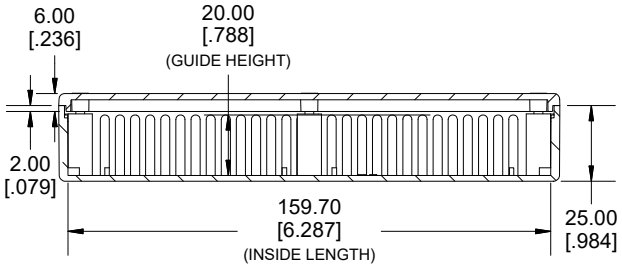

SECTION B-B
SIDE VIEW

DETAIL C

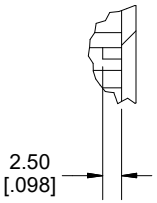

DETAIL D

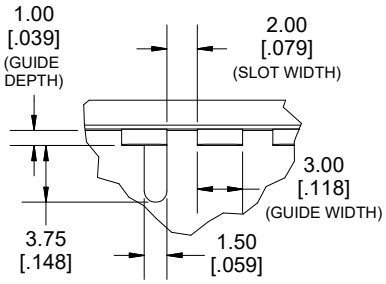

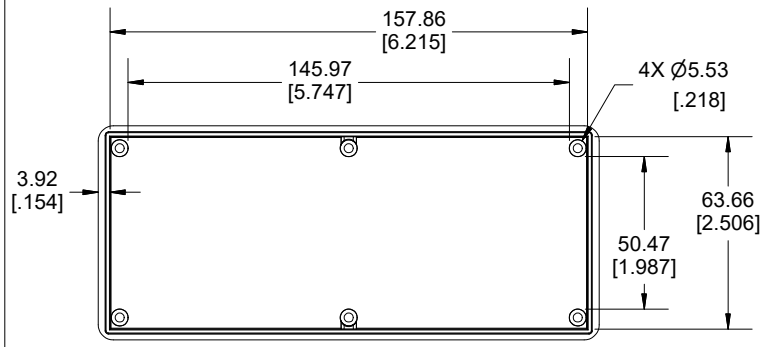

INSIDE LID

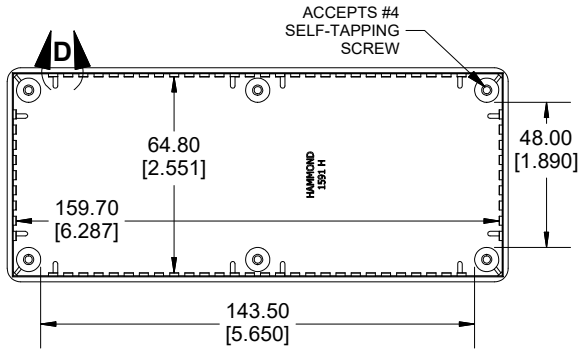

INSIDE BOX

Enclosures can be Factory Modified (Milling, Drilling, Printing etc.)
Contact Factory (modshop@hammfg.com) for quotes
Solid models of this enclosure available in .stp or .x_t
(Part number and text placement/orientation on our products are subject to change, we do not recommend using them as a locating reference for modification purposes)

NOTE
Purchased assembly includes box, lid and 6 cover screws Enclosure made from GPABS.
Recommended Torque: 42-57 ozf.in (30-40 cN.m)

PART NUMBERS	
1591H Enclosure	
General Purpose ABS Black	1591HSBK
General Purpose ABS Grey	1591HSGY
Accessories	
Plated Cover screw #4 X 1/2" (100Pkg) Self-Tapping	1591TS100 (Silver) 1591TS100BK (Black)
PC Board Card Adapters	1591Z6 (6Pkg) 1591Z50 (50 Pkg) 1591Z100 (100Pkg)
Nylon Belt / Pocket clip	1599CLIP (Black) 1599CLIPGY (Grey)
Clear Lids - Flame Retardant Polycarbonate - Lid ONLY	1591HC

Dimensions:
mm
[inches]

HAMMOND MANUFACTURING®
1591HS
www.hammondmfg.com

REV: 07.01.2020