Product data sheet
Characteristics

XCKN2102P20
limit switch XCKN - plastic roller plunger - 1NC +1NO - snap - M20



Main

Range of product	OsiSense XC
Series name	Standard format
Product or component type	Limit switch
Device short name	XCKN
Sensor design	Compact form C
Body type	Fixed
Head type	Plunger head
Material	Plastic
Body material	Plastic
Head material	Plastic
Fixing mode	By the body
Movement of operating head	Linear
Type of operator	Spring return roller plunger plastic
Type of approach	Lateral approach 2 directions
Cable entry	1 entry tapped for M20 x 1.5 cable gland, cable outer diameter: 7...13 mm
Number of poles	2
Contacts type and composition	1 NC + 1 NO
Contacts operation	Snap action

Complementary

Switch actuation	By 30° cam
Electrical connection	Screw-clamp terminals, clamping capacity: 1 x 0.34...2 x 1.5 mm²
Contacts insulation form	Zb
Positive opening	With
Positive opening minimum force	20 N
Minimum force for tripping	12 N
Maximum actuation speed	0.3 m/s
Contact code designation	R300, DC-13 (Ue = 250 V, Ie = 0.1 A) conforming to EN/IEC 60947-5-1 appendix A A300, AC-15 (Ue = 240 V, Ie = 3 A) , Ithe = 10 A conforming to EN/IEC 60947-5-1 appendix A
[Ui] rated insulation voltage	300 V conforming to CSA C22.2 No 14 500 V degree of pollution 3 conforming to IEC 60947-1 300 V conforming to UL 508
[Uimp] rated impulse withstand voltage	6 kV conforming to IEC 60947-1 6 kV conforming to IEC 60664
Short circuit protection	10 A cartridge fuse type gG
Electrical durability	5000000 cycles, DC-13, 48 V, 7 W, operating rate: <= 60 cyc/mn, load factor: 0.5 conforming to IEC 60947-5-1 appendix C 5000000 cycles, DC-13, 24 V, 10 W, operating rate: <= 60 cyc/mn, load factor: 0.5 conforming to IEC 60947-5-1 appendix C 5000000 cycles, DC-13, 120 V, 4 W, operating rate: <= 60 cyc/mn, load factor: 0.5 conforming to IEC 60947-5-1 appendix C
Mechanical durability	10000000 cycles
Width	30 mm
Height	85 mm

The information provided in this documentation contains general descriptions and/or technical characteristics of the performance of the products contained herein.
This documentation is not intended as a substitute for and is not to be used for determining suitability or reliability of these products for specific user applications.
It is the duty of any such user or integrator to perform the appropriate and complete risk analysis, evaluation and testing of the products with respect to the relevant specific application or use thereof.
Neither Schneider Electric Industries SAS nor any of its affiliates or subsidiaries shall be responsible or liable for misuse of the information contained herein.

Depth	30 mm
Product weight	0.145 kg
Terminals description ISO n°1	(13-14)NO (21-22)NC

Environment

Shock resistance	50 gn (duration = 11 ms) conforming to IEC 60068-2-27
Vibration resistance	25 gn (f = 10...500 Hz) conforming to IEC 60068-2-6
IP degree of protection	IP65 conforming to IEC 60529
IK degree of protection	IK04 conforming to EN 50102
Class of protection against electric shock	Class II conforming to NF C 20-030 Class II conforming to IEC 61140
Ambient air temperature for operation	-25...70 °C
Ambient air temperature for storage	-40...70 °C
Protective treatment	TC
Product certifications	CCC CSA UL
Standards	EN 60204-1 EN 60947-5-1 IEC 60204-1 IEC 60947-5-1 UL 508 CSA C22.2 No 14

Offer Sustainability

Sustainable offer status	Green Premium product
RoHS (date code: YYWW)	Compliant - since 0953 - Schneider Electric declaration of conformity
REACh	Reference not containing SVHC above the threshold
Product environmental profile	Available Download Product Environmental
Product end of life instructions	Need no specific recycling operations

Dimensions

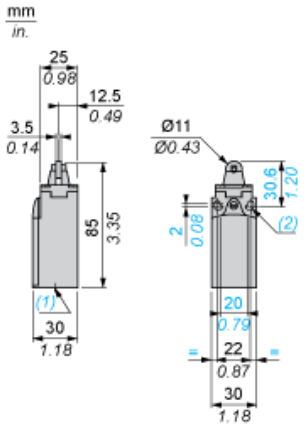

(1) 1 tapped entry for M20 x 1.5
(2) Ø: 2 elongated holes Ø 4.3 x 6.3 on 22 mm centres, 2 holes Ø 4.3 on 20 mm centres.

Mounting with Cable Entry

Position of Cable Gland

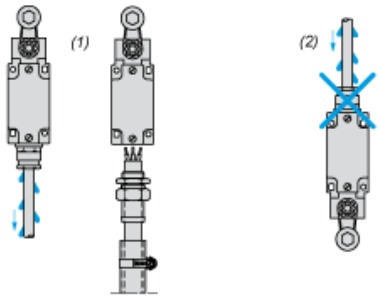

(1) Recommended
(2) To be avoided

Wiring Diagram

2-pole NC + NO Snap Action

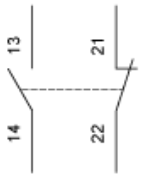

Characteristics of Actuation

Switch Actuation by 30° Cam

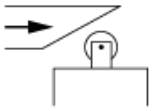

Functionnal Diagram

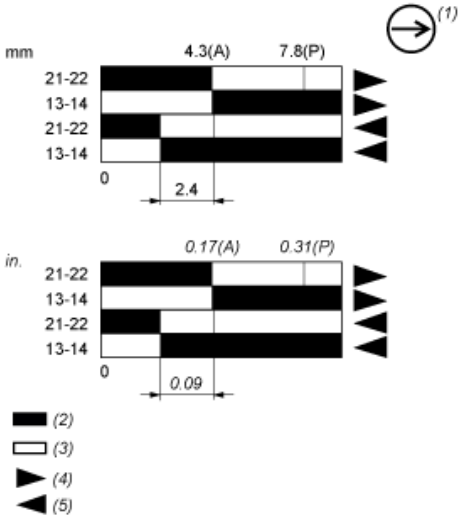

(P) Positive opening point
(A) Cam displacement
(1) NC contact with positive opening operation
(2) Closed
(3) Open
(4) Tripping
(5) Resetting