MGS204

Full-metal magnetic sensor

MGK3070-BPKG/AM/G/US

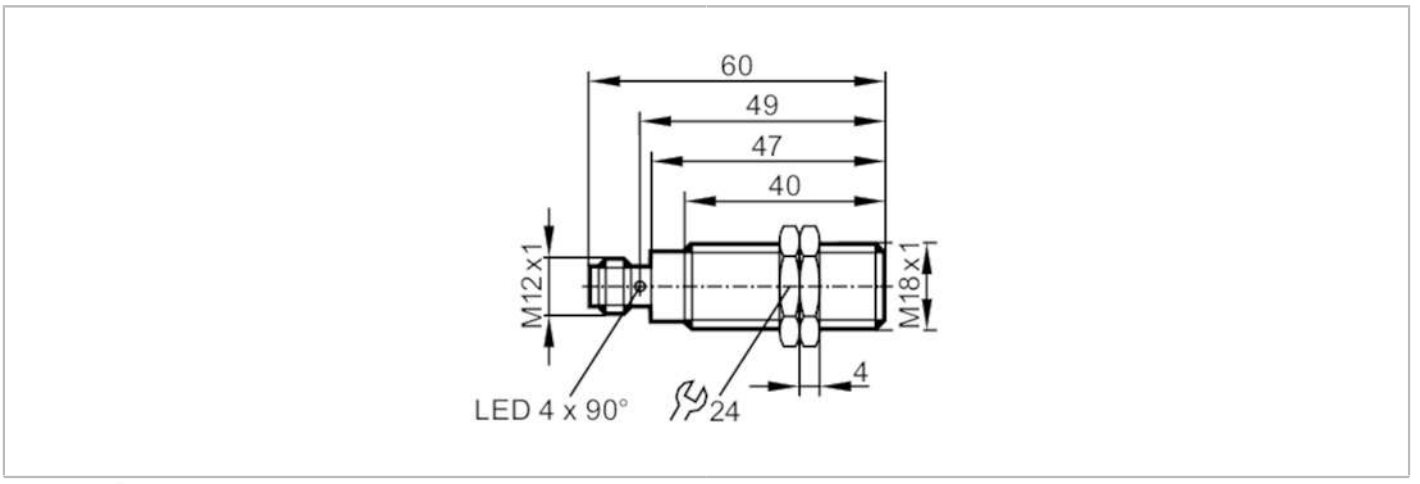

Product characteristics		
Electrical design		PNP
Output function		normally open
Sensing range	[mm]	70; (referred to magnet M 4.0)
Housing		threaded type
Dimensions	[mm]	M18 x 1 / L = 60
Application		
Special feature		Gold-plated contacts; Full-metal housing
Pressure rating	[bar]	100
Electrical data		
Operating voltage	[V]	10...30 DC
Current consumption	[mA]	< 10
Protection class		III
Reverse polarity protection		yes
Outputs		
Electrical design		PNP
Output function		normally open
Max. voltage drop switching output DC	[V]	2.5
Permanent current rating of switching output DC	[mA]	200
Switching frequency DC	[Hz]	5000
Short-circuit protection		yes
Overload protection		yes
Detection zone		
Sensing range	[mm]	70; (referred to magnet M 4.0)
Response sensitivity	[mT]	0.9
Accuracy / deviations		
Hysteresis	[% of Sr]	1...10

MGS204

Full-metal magnetic sensor

MGK3070-BPKG/AM/G/US

Operating conditions			
Ambient temperature	[°C]	-25...75	
Protection		IP 65; IP 67	
Tests / approvals			
EMC		EN 61000-4-2 ESD	4 kV CD / 8 kV AD
		EN 61000-4-3 HF radiated	10 V/m
		EN 61000-4-4 Burst	2 kV
		EN 61000-4-5 Surge	0,5 kV line to line, Ri: 2 Ohm
		EN 61000-4-6 HF conducted	10 V
		EN 55011 emission	class B
		DIN ISO 11452-2	100 V/m
MTTF	[years]	1370	
Mechanical data			
Weight	[g]	49.7	
Housing		threaded type	
Dimensions	[mm]	M18 x 1 / L = 60	
Thread designation		M18 x 1	
Materials		housing: stainless steel (1.4404 / 316L); sensing face: stainless steel (1.4404 / 316L); LED window: PA; lock nuts: brass	
Full-metal housing		yes	
Displays / operating elements			
Display		switching status	1 x LED, yellow
Accessories			
Items supplied		lock nuts: 2	
Remarks			
Pack quantity		1 pcs.	

Electrical connection - plug

Connector: 1 x M12; coding: A; Contacts: gold-plated



MGS204

Full-metal magnetic sensor

MGK3070-BPKG/AM/G/US

Connection

