178 MICROSWITCHES
182 TACTILE SWITCHES
186 22MM CONTROL SWITCHES
191 FOOT SWITCHES
193 LIMIT SWITCHES
203 PIEZO SWITCHES AND KEYPADS

Ultra miniature microswitches

Product overview

- Rating 3A switching S.P.D.T.
- Space saving simulated
- Button, lever or roller actuators
- PCB mounting
- 90° Pins available to order
- cULus and approved

CSMU01

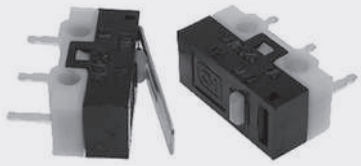

SPECIFICATION		
Rating	3A/125VAC	
Contact resistance	50mΩ max	
Insulation strength	100MΩ min/500VDC	
Electrical life	10,000 operations min	
Temperature range	-10°C to +85°C	
Material	Case Button Actuator Contacts	PBT PBT Stainless steel AgNi10
Teminals	Brass alloy H65 silver plated	

3A	ACTUATOR STYLE	OPERATING FORCE MAX	RELEASE FORCE MAX	OPERATING POSITION	PRE TRAVEL MAX	MOVEMENT DIFFERENTIAL	OVER TRAVEL MIN
CSMU0100	Button	1.5N	0.08N	5.5 ± 0.3mm	N/A	0.2mm	0.2mm
CSMU0101	Tapered lever	0.23N	0.03N	6.2 ± 0.8mm	N/A	0.7mm	0.7mm
CSMU0106	Parallel lever	0.23N	0.03N	7 ± 1.2mm	N/A	0.7mm	0.7mm
CSMU0140	Simulated roller	0.4N	0.05N	8.2 ± 1.5mm	4.2mm	0.9mm	0.9mm

Types of actuator

Button

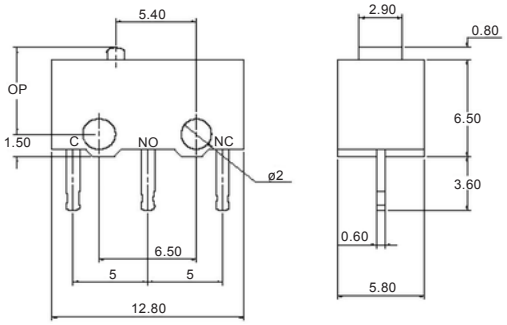

Tapered lever

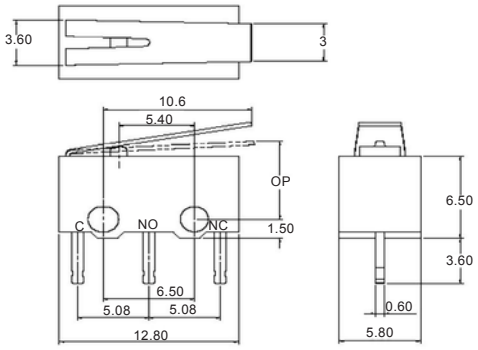

Parallel lever

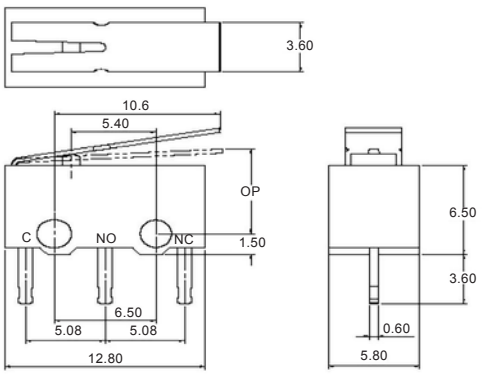

Simulated roller

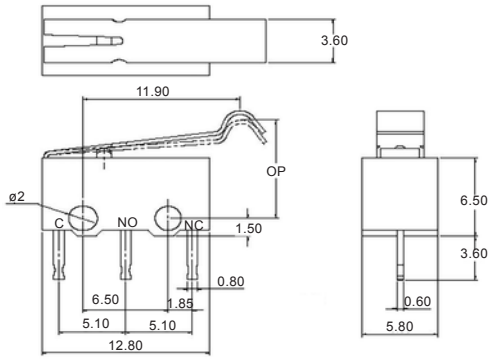

KEY FEATURES

Ultra miniature, space saving profile | Single pole double throw action

We operate a constant improvement policy, our products are subject to change without notice.